Installer reference guide

Daikin Altherma 3 R W

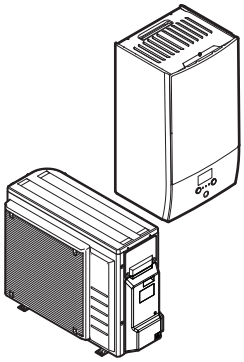

https://daikintechnicaldatahub.eu

ERGA04E▲V3▼
ERGA06E▲V3H▼
ERGA08E▲V3H▼
ERGA04E▲V3A▼
ERGA06E▲V3A▼
ERGA08E▲V3A▼

EHBH04E▲6V▼
EHBH08E▲6V▼
EHBH08E▲9W▼
EHBX04E▲6V▼
EHBX08E▲6V▼
EHBX08E▲9W▼

▲= 1, 2, 3, ..., 9, A, B, C, ..., Z
▼= , , 1, 2, 3, ..., 9, A, B, C, ..., Z

Table of contents

1 About this document 6
1.1 Meaning of warnings and symbols 7
1.2 Installer reference guide at a glance 8

2 General safety precautions 10
2.1 For the installer 10
2.1.1 General 10
2.1.2 Installation site 11
2.1.3 Refrigerant — in case of R410A or R32 11
2.1.4 Water 13
2.1.5 Electrical 13

3 Specific installer safety instructions 16

4 About the box 22
4.1 Outdoor unit 22
4.1.1 To unpack the outdoor unit 22
4.1.2 To handle the outdoor unit 22
4.1.3 To remove the accessories from the outdoor unit 23
4.2 Indoor unit 24
4.2.1 To unpack the indoor unit 24
4.2.2 To remove the accessories from the indoor unit 24

5 About the units and options 25
5.1 Identification 25
5.1.1 Identification label: Outdoor unit 25
5.1.2 Identification label: Indoor unit 26
5.2 Combining units and options 26
5.2.1 Possible combinations of indoor unit and outdoor unit 26
5.2.2 Possible combinations of indoor unit and domestic hot water tank 26
5.2.3 Possible options for the outdoor unit 26
5.2.4 Possible options for the indoor unit 27

6 Application guidelines 31
6.1 Overview: Application guidelines 31
6.2 Setting up the space heating/cooling system 32
6.2.1 Single room 33
6.2.2 Multiple rooms – One LWT zone 37
6.2.3 Multiple rooms – Two LWT zones 42
6.3 Setting up an auxiliary heat source for space heating 45
6.4 Setting up the domestic hot water tank 47
6.4.1 System layout – Standalone DHW tank 47
6.4.2 Selecting the volume and desired temperature for the DHW tank 47
6.4.3 Setup and configuration – DHW tank 49
6.4.4 DHW pump for instant hot water 50
6.4.5 DHW pump for disinfection 50
6.4.6 DHW pump for tank preheating 51
6.5 Setting up the energy metering 52
6.5.1 Produced heat 53
6.5.2 Consumed energy 53
6.5.3 Normal kWh rate power supply 54
6.5.4 Preferential kWh rate power supply 55
6.6 Setting up the power consumption control 56
6.6.1 Permanent power limitation 57
6.6.2 Power limitation activated by digital inputs 57
6.6.3 Power limitation process 59
6.6.4 BBR16 power limitation 59
6.7 Setting up an external temperature sensor 60

7 Unit installation 62
7.1 Preparing the installation site 62
7.1.1 Installation site requirements of the outdoor unit 62
7.1.2 Additional installation site requirements of the outdoor unit in cold climates 65
7.1.3 Installation site requirements of the indoor unit 65
7.1.4 Special requirements for R32 units 66
7.1.5 Installation patterns 67

7.2 Opening and closing the units ... 71
7.2.1 About opening the units ... 71
7.2.2 To open the outdoor unit ... 71
7.2.3 To close the outdoor unit ... 72
7.2.4 To open the indoor unit ... 72
7.2.5 To close the indoor unit ... 74
7.3 Mounting the outdoor unit ... 74
7.3.1 About mounting the outdoor unit ... 74
7.3.2 Precautions when mounting the outdoor unit ... 74
7.3.3 To provide the installation structure ... 75
7.3.4 To install the outdoor unit ... 77
7.3.5 To provide drainage ... 78
7.3.6 To prevent the outdoor unit from falling over ... 80
7.4 Mounting the indoor unit ... 81
7.4.1 About mounting the indoor unit ... 81
7.4.2 Precautions when mounting the indoor unit ... 81
7.4.3 To install the indoor unit ... 81
7.4.4 To connect the drain hose to the drain ... 82

8 Piping installation 84
8.1 Preparing refrigerant piping ... 84
8.1.1 Refrigerant piping requirements ... 84
8.1.2 Refrigerant piping insulation ... 85
8.2 Connecting the refrigerant piping ... 85
8.2.1 About connecting the refrigerant piping ... 85
8.2.2 Precautions when connecting the refrigerant piping ... 86
8.2.3 Guidelines when connecting the refrigerant piping ... 87
8.2.4 Pipe bending guidelines ... 87
8.2.5 To flare the pipe end ... 87
8.2.6 To braze the pipe end ... 88
8.2.7 Using the stop valve and service port ... 89
8.2.8 To connect the refrigerant piping to the outdoor unit ... 90
8.2.9 To connect the refrigerant piping to the indoor unit ... 91
8.3 Checking the refrigerant piping ... 91
8.3.1 About checking the refrigerant piping ... 91
8.3.2 Precautions when checking the refrigerant piping ... 92
8.3.3 To check for leaks ... 92
8.3.4 To perform vacuum drying ... 92
8.3.5 To insulate the refrigerant piping ... 93
8.4 Charging refrigerant ... 94
8.4.1 About charging refrigerant ... 94
8.4.2 Precautions when charging refrigerant ... 95
8.4.3 To determine the additional refrigerant amount ... 95
8.4.4 To determine the complete recharge amount ... 96
8.4.5 To charge additional refrigerant ... 96
8.4.6 To fix the fluorinated greenhouse gases label ... 96
8.5 Preparing water piping ... 97
8.5.1 Water circuit requirements ... 97
8.5.2 Formula to calculate the expansion vessel pre-pressure ... 99
8.5.3 To check the water volume and flow rate ... 100
8.5.4 Changing the pre-pressure of the expansion vessel ... 102
8.5.5 To check the water volume: Examples ... 102
8.6 Connecting water piping ... 103
8.6.1 About connecting the water piping ... 103
8.6.2 Precautions when connecting the water piping ... 103
8.6.3 To connect the water piping ... 103
8.6.4 To fill the water circuit ... 105
8.6.5 To fill the domestic hot water tank ... 105
8.6.6 To insulate the water piping ... 105

9 Electrical installation 106
9.1 About connecting the electrical wiring ... 106
9.1.1 Precautions when connecting the electrical wiring ... 106
9.1.2 Guidelines when connecting the electrical wiring ... 107
9.1.3 About electrical compliance ... 109
9.1.4 About preferential kWh rate power supply ... 109
9.1.5 Overview of electrical connections except external actuators ... 110
9.2 Connections to the outdoor unit ... 110
9.2.1 Specifications of standard wiring components ... 111
9.2.2 To connect the electrical wiring to the outdoor unit ... 111

9.3 Connections to the indoor unit ... 113
9.3.1 To connect the main power supply ... 116
9.3.2 To connect the backup heater power supply ... 118
9.3.3 To connect the shut-off valve ... 121
9.3.4 To connect the electricity meters ... 122
9.3.5 To connect the domestic hot water pump ... 123
9.3.6 To connect the alarm output ... 124
9.3.7 To connect the space cooling/heating ON/OFF output ... 125
9.3.8 To connect the changeover to external heat source ... 126
9.3.9 To connect the power consumption digital inputs ... 127
9.3.10 To connect the safety thermostat ... 128
9.3.11 Smart Grid ... 129
9.3.12 To connect the WLAN cartridge (delivered as accessory) ... 133

10 Configuration 135

10.1 Overview: Configuration ... 135
10.1.1 To access the most used commands ... 136
10.1.2 To connect the PC cable to the switch box ... 138
10.2 Configuration wizard ... 139
10.3 Possible screens ... 140
10.3.1 Possible screens: Overview ... 140
10.3.2 Home screen ... 141
10.3.3 Main menu screen ... 143
10.3.4 Menu screen ... 144
10.3.5 Setpoint screen ... 144
10.3.6 Detailed screen with values ... 145
10.4 Preset values and schedules ... 146
10.4.1 Using preset values ... 146
10.4.2 Using and programming schedules ... 146
10.4.3 Schedule screen: Example ... 150
10.4.4 Setting the energy prices ... 154
10.5 Weather-dependent curve ... 156
10.5.1 What is a weather-dependent curve? ... 156
10.5.2 2-points curve ... 156
10.5.3 Slope-offset curve ... 157
10.5.4 Using weather-dependent curves ... 159
10.6 Settings menu ... 160
10.6.1 Malfunctioning ... 161
10.6.2 Room ... 161
10.6.3 Main zone ... 165
10.6.4 Additional zone ... 175
10.6.5 Space heating/cooling ... 180
10.6.6 Tank ... 189
10.6.7 User settings ... 197
10.6.8 Information ... 202
10.6.9 Installer settings ... 203
10.6.10 Commissioning ... 225
10.6.11 User profile ... 226
10.6.12 Operation ... 226
10.6.13 WLAN ... 226
10.7 Menu structure: Overview user settings ... 230
10.8 Menu structure: Overview installer settings ... 231

11 Commissioning 232

11.1 Overview: Commissioning ... 232
11.2 Precautions when commissioning ... 233
11.3 Checklist before commissioning ... 233
11.4 Checklist during commissioning ... 234
11.4.1 Minimum flow rate ... 234
11.4.2 Air purge function ... 235
11.4.3 Actuator test run ... 236
11.4.4 Operation test run ... 237
11.4.5 Underfloor heating screed dryout ... 238

12 Hand-over to the user 242

13 Maintenance and service 243

13.1 Maintenance safety precautions ... 243
13.2 Yearly maintenance ... 243
13.2.1 Yearly maintenance outdoor unit: overview ... 243
13.2.2 Yearly maintenance outdoor unit: instructions ... 244

13.2.3 Yearly maintenance indoor unit: overview ... 244
13.2.4 Yearly maintenance indoor unit: instructions ... 244
13.3 About cleaning the water filter in case of trouble ... 246
13.3.1 To remove the water filter ... 246
13.3.2 To clean the water filter in case of trouble ... 247
13.3.3 To install the water filter ... 248

14 Troubleshooting 249
14.1 Overview: Troubleshooting ... 249
14.2 Precautions when troubleshooting ... 249
14.3 Solving problems based on symptoms ... 250
14.3.1 Symptom: The unit is NOT heating or cooling as expected ... 250
14.3.2 Symptom: Hot water does NOT reach the desired temperature ... 250
14.3.3 Symptom: The compressor does NOT start (space heating or domestic water heating) ... 251
14.3.4 Symptom: The system is making gurgling noises after commissioning ... 251
14.3.5 Symptom: The pump is making noise (cavitation) ... 252
14.3.6 Symptom: The pressure relief valve opens ... 252
14.3.7 Symptom: The water pressure relief valve leaks ... 253
14.3.8 Symptom: The space is NOT sufficiently heated at low outdoor temperatures ... 253
14.3.9 Symptom: The pressure at the tapping point is temporarily unusually high ... 254
14.3.10 Symptom: Tank disinfection function is NOT completed correctly (AH-error) ... 254
14.4 Solving problems based on error codes ... 255
14.4.1 To display the help text in case of a malfunction ... 255
14.4.2 Error codes: Overview ... 256

15 Disposal 260
15.1 Overview: Disposal ... 260
15.2 To pump down ... 260

16 Technical data 262
16.1 Piping diagram: Outdoor unit ... 263
16.2 Piping diagram: Indoor unit ... 264
16.3 Wiring diagram: Outdoor unit ... 265
16.4 Wiring diagram: Indoor unit ... 267
16.5 Table 1 – Maximum refrigerant charge allowed in a room: indoor unit ... 273
16.6 Table 2 – Minimum floor area: indoor unit ... 273
16.7 Table 3 – Minimum bottom opening area for natural ventilation: indoor unit ... 274
16.8 ESP curve: Indoor unit ... 275

17 Glossary 276

18 Field settings table 277

1 About this document

Target audience

Authorised installers

Documentation set

This document is part of a documentation set. The complete set consists of:

- **General safety precautions:**
  - Safety instructions that you must read before installing
  - Format: Paper (in the box of the indoor unit)
- **Operation manual:**
  - Quick guide for basic usage
  - Format: Paper (in the box of the indoor unit)
- **User reference guide:**
  - Detailed step-by-step instructions and background information for basic and advanced usage
  - Format: Digital files on https://www.daikin.eu. Use the search function 🔍 to find your model.
- **Installation manual – Outdoor unit:**
  - Installation instructions
  - Format: Paper (in the box of the outdoor unit)
- **Installation manual – Indoor unit:**
  - Installation instructions
  - Format: Paper (in the box of the indoor unit)
- **Installer reference guide:**
  - Preparation of the installation, good practices, reference data, …
  - Format: Digital files on https://www.daikin.eu. Use the search function 🔍 to find your model.
- **Addendum book for optional equipment:**
  - Additional info about how to install optional equipment
  - Format: Paper (in the box of the indoor unit) + Digital files on https://www.daikin.eu. Use the search function 🔍 to find your model.

The latest revision of the supplied documentation is published on the regional Daikin website and is available via your dealer.

The original instructions are written in English. All other languages are translations of the original instructions.

Technical engineering data

- A **subset** of the latest technical data is available on the regional Daikin website (publicly accessible).
- The **full set** of the latest technical data is available on the Daikin Business Portal (authentication required).

Online tools

In addition to the documentation set, some online tools are available for installers:

- **Daikin Technical Data Hub**
  - Central hub for technical specifications of the unit, useful tools, digital resources, and more.
  - Publicly accessible via https://daikintechnicaldatahub.eu.
- **Heating Solutions Navigator**
  - Digital toolbox that offers a variety of tools to facilitate the installation and configuration of heating systems.
  - To access the Heating Solutions Navigator, registration to the Stand By Me platform is required. For more information, see https://professional.standbyme.daikin.eu.
- **Daikin e-Care**
  - Mobile app for installers and service technicians that allows you to register, configure and troubleshoot heating systems.
  - Use the QR codes below to download the mobile app for iOS and Android devices. Registration to the Stand By Me platform is required to access the app.

App Store

Google Play

1.1 Meaning of warnings and symbols

DANGER
Indicates a situation that results in death or serious injury.

DANGER: RISK OF ELECTROCUTION
Indicates a situation that could result in electrocution.

DANGER: RISK OF BURNING/SCALDING
Indicates a situation that could result in burning/scalding because of extreme hot or cold temperatures.

DANGER: RISK OF EXPLOSION
Indicates a situation that could result in explosion.

WARNING
Indicates a situation that could result in death or serious injury.

WARNING: FLAMMABLE MATERIAL

CAUTION
Indicates a situation that could result in minor or moderate injury.

NOTICE

Indicates a situation that could result in equipment or property damage.

INFORMATION

Indicates useful tips or additional information.

Symbols used on the unit:

Symbol	Explanation
	Before installation, read the installation and operation manual, and the wiring instruction sheet.
	Before performing maintenance and service tasks, read the service manual.
	For more information, see the installer and user reference guide.
	The unit contains rotating parts. Be careful when servicing or inspecting the unit.

Symbols used in the documentation:

Symbol	Explanation
	Indicates a figure title or a reference to it. **Example:** "1–3 Figure title" means "Figure 3 in chapter 1".
	Indicates a table title or a reference to it. **Example:** "1–3 Table title" means "Table 3 in chapter 1".

1.2 Installer reference guide at a glance

Chapter	Description
About this document	What documentation exists for the installer
General safety precautions	Safety instructions that you must read before installing
Specific installer safety instructions	
About the box	How to handle the box, unpack the units and remove their accessories
About the units and options	▪ How to identify the units ▪ Possible combinations of units and options
Application guidelines	Various installation setups of the system
Unit installation	What to do and know to install the system, including information on how to prepare for an installation
Piping installation	What to do and know to install the piping of the system, including information on how to prepare for an installation

Chapter	Description
Electrical installation	What to do and know to install the electrical components of the system, including information on how to prepare for an installation
Configuration	What to do and know to configure the system after it is installed
Commissioning	What to do and know to commission the system after it is configured
Hand-over to the user	What to give and explain to the user
Maintenance and service	How to maintain and service the units
Troubleshooting	What to do in case of problems
Disposal	How to dispose of the system
Technical data	Specifications of the system
Glossary	Definition of terms
Field settings table	Table to be filled in by the installer, and kept for future reference **Note:** There is also an installer settings table in the user reference guide. This table has to be filled in by the installer and handed over to the user.

2 General safety precautions

In this chapter

2.1 For the installer 10
2.1.1 General 10
2.1.2 Installation site 11
2.1.3 Refrigerant — in case of R410A or R32 11
2.1.4 Water 13
2.1.5 Electrical 13

2.1 For the installer

2.1.1 General

If you are NOT sure how to install or operate the unit, contact your dealer.

DANGER: RISK OF BURNING/SCALDING

- Do NOT touch the refrigerant piping, water piping or internal parts during and immediately after operation. It could be too hot or too cold. Give it time to return to normal temperature. If you MUST touch it, wear protective gloves.
- Do NOT touch any accidental leaking refrigerant.

WARNING

Improper installation or attachment of equipment or accessories could result in electrical shock, short-circuit, leaks, fire or other damage to the equipment. ONLY use accessories, optional equipment and spare parts made or approved by Daikin unless otherwise specified.

WARNING

Make sure installation, testing and applied materials comply with applicable legislation (on top of the instructions described in the Daikin documentation).

WARNING

Tear apart and throw away plastic packaging bags so that nobody, especially children, can play with them. **Possible consequence:** suffocation.

WARNING

Provide adequate measures to prevent that the unit can be used as a shelter by small animals. Small animals that make contact with electrical parts can cause malfunctions, smoke or fire.

CAUTION

Wear adequate personal protective equipment (protective gloves, safety glasses,...) when installing, maintaining or servicing the system.

CAUTION

Do NOT touch the air inlet or aluminium fins of the unit.

CAUTION

- Do NOT place any objects or equipment on top of the unit.
- Do NOT sit, climb or stand on the unit.

NOTICE

Works executed on the outdoor unit are best done under dry weather conditions to avoid water ingress.

In accordance with the applicable legislation, it might be necessary to provide a logbook with the product containing at least: information on maintenance, repair work, results of tests, stand-by periods,...

Also, at least, following information MUST be provided at an accessible place at the product:

- Instructions for shutting down the system in case of an emergency
- Name and address of fire department, police and hospital
- Name, address and day and night telephone numbers for obtaining service

In Europe, EN378 provides the necessary guidance for this logbook.

2.1.2 Installation site

- Provide sufficient space around the unit for servicing and air circulation.
- Make sure the installation site withstands the weight and vibration of the unit.
- Make sure the area is well ventilated. Do NOT block any ventilation openings.
- Make sure the unit is level.

Do NOT install the unit in the following places:

- In potentially explosive atmospheres.
- In places where there is machinery that emits electromagnetic waves. Electromagnetic waves may disturb the control system, and cause malfunction of the equipment.
- In places where there is a risk of fire due to the leakage of flammable gases (example: thinner or gasoline), carbon fibre, ignitable dust.
- In places where corrosive gas (example: sulphurous acid gas) is produced. Corrosion of copper pipes or soldered parts may cause the refrigerant to leak.

2.1.3 Refrigerant — in case of R410A or R32

If applicable. See the installation manual or installer reference guide of your application for more information.

DANGER: RISK OF EXPLOSION

Pump down – Refrigerant leakage. If you want to pump down the system, and there is a leak in the refrigerant circuit:

- Do NOT use the unit's automatic pump down function, with which you can collect all refrigerant from the system into the outdoor unit. **Possible consequence:** Self-combustion and explosion of the compressor because of air going into the operating compressor.
- Use a separate recovery system so that the unit's compressor does NOT have to operate.

WARNING

During tests, NEVER pressurise the product with a pressure higher than the maximum allowable pressure (as indicated on the nameplate of the unit).

WARNING

Take sufficient precautions in case of refrigerant leakage. If refrigerant gas leaks, ventilate the area immediately. Possible risks:

- Excessive refrigerant concentrations in a closed room can lead to oxygen deficiency.
- Toxic gas might be produced if refrigerant gas comes into contact with fire.

WARNING

ALWAYS recover the refrigerant. Do NOT release directly into the environment. Use a vacuum pump to evacuate the installation.

WARNING

Make sure there is no oxygen in the system. Refrigerant may ONLY be charged after performing the leak test and the vacuum drying.

Possible consequence: Self-combustion and explosion of the compressor because of oxygen going into the operating compressor.

NOTICE

- To avoid compressor breakdown, do NOT charge more than the specified amount of refrigerant.
- When the refrigerant system is to be opened, refrigerant MUST be treated according to the applicable legislation.

NOTICE

Make sure refrigerant piping installation complies with applicable legislation. In Europe, EN378 is the applicable standard.

NOTICE

Make sure the field piping and connections are NOT subjected to stress.

NOTICE

After all the piping has been connected, make sure there is no gas leak. Use nitrogen to perform a gas leak detection.

- In case recharge is required, see the nameplate or the refrigerant charge label of the unit. It states the type of refrigerant and necessary amount.
- Whether the unit is factory charged with refrigerant or non-charged, in both cases you might need to charge additional refrigerant, depending on the pipe sizes and pipe lengths of the system.
- ONLY use tools exclusively for the refrigerant type used in the system, this to ensure pressure resistance and prevent foreign materials from entering into the system.
- Charge the liquid refrigerant as follows:

If	Then
A siphon tube is present (i.e., the cylinder is marked with "Liquid filling siphon attached")	Charge with the cylinder upright. 
A siphon tube is NOT present	Charge with the cylinder upside down. 

- Open refrigerant cylinders slowly.
- Charge the refrigerant in liquid form. Adding it in gas form may prevent normal operation.

CAUTION

When the refrigerant charging procedure is done or when pausing, close the valve of the refrigerant tank immediately. If the valve is NOT closed immediately, remaining pressure might charge additional refrigerant. **Possible consequence:** Incorrect refrigerant amount.

2.1.4 Water

If applicable. See the installation manual or installer reference guide of your application for more information.

NOTICE

Make sure water quality complies with EU directive 2020/2184.

2.1.5 Electrical

DANGER: RISK OF ELECTROCUTION

- Turn OFF all power supply before removing the switch box cover, connecting electrical wiring or touching electrical parts.
- Disconnect the power supply for more than 10 minutes, and measure the voltage at the terminals of main circuit capacitors or electrical components before servicing. The voltage MUST be less than 50 V DC before you can touch electrical components. For the location of the terminals, see the wiring diagram.
- Do NOT touch electrical components with wet hands.
- Do NOT leave the unit unattended when the service cover is removed.

WARNING

If NOT factory installed, a main switch or other means for disconnection, having a contact separation in all poles providing full disconnection under overvoltage category III condition, MUST be installed in the fixed wiring.

WARNING

- ONLY use copper wires.
- Make sure the field wiring complies with the national wiring regulations.
- All field wiring MUST be performed in accordance with the wiring diagram supplied with the product.
- NEVER squeeze bundled cables and make sure they do NOT come in contact with the piping and sharp edges. Make sure no external pressure is applied to the terminal connections.
- Make sure to install earth wiring. Do NOT earth the unit to a utility pipe, surge absorber, or telephone earth. Incomplete or incorrect earthing may cause electrical shock.
- Make sure to use a dedicated power circuit. NEVER use a power supply shared by another appliance.
- Make sure to install the required fuses or circuit breakers.
- Make sure to install an earth leakage protector. Failure to do so may cause electrical shock or fire.
- When installing the earth leakage protector, make sure it is compatible with the inverter (resistant to high frequency electric noise) to avoid unnecessary opening of the earth leakage protector.

WARNING

- After finishing the electrical work, confirm that each electrical component and terminal inside the switch box is connected securely.
- Make sure all covers are closed before starting up the unit.

CAUTION

- When connecting the power supply: connect the earth cable first, before making the current-carrying connections.
- When disconnecting the power supply: disconnect the current-carrying cables first, before separating the earth connection.
- The length of the conductors between the power supply stress relief and the terminal block itself MUST be as such that the current-carrying wires are tautened before the earth wire is in case the power supply is pulled loose from the stress relief.

NOTICE

Precautions when laying power wiring:



- Do NOT connect wiring of different thicknesses to the power terminal block (slack in the power wiring may cause abnormal heat).
- When connecting wiring which is the same thickness, do as shown in the figure above.
- For wiring, use the designated power wire and connect firmly, then secure to prevent outside pressure being exerted on the terminal board.
- Use an appropriate screwdriver for tightening the terminal screws. A screwdriver with a small head will damage the head and make proper tightening impossible.
- Over-tightening the terminal screws may break them.

Install power cables at least 1 meter away from televisions or radios to prevent interference. Depending on the radio waves, a distance of 1 meter may NOT be sufficient.

NOTICE

ONLY applicable if the power supply is three-phase, and the compressor has an ON/OFF starting method.

If there exists the possibility of reversed phase after a momentary black out and the power goes ON and OFF while the product is operating, attach a reversed phase protection circuit locally. Running the product in reversed phase can break the compressor and other parts.

3 Specific installer safety instructions

Always observe the following safety instructions and regulations.

Handling the unit (see "4.1.2 To handle the outdoor unit" [▶ 22])

CAUTION

To avoid injury, do NOT touch the air inlet or aluminium fins of the unit.

Application guidelines (see "6 Application guidelines" [▶ 31])

CAUTION

If there is more than one leaving water zone, ALWAYS install a mixing valve station in the main zone to decrease (in heating)/increase (in cooling) the leaving water temperature when the additional zone has demand.

Installation site (see "7.1 Preparing the installation site" [▶ 62])

WARNING

Follow the service space dimensions in this manual to install the unit correctly.

- Outdoor unit: See "7.1.1 Installation site requirements of the outdoor unit" [▶ 62].
- Indoor unit: See "7.1.3 Installation site requirements of the indoor unit" [▶ 65] and "7.1.5 Installation patterns" [▶ 67].

WARNING

The appliance shall be stored in a room without continuously operating ignition sources (example: open flames, an operating gas appliance or an operating electric heater).

WARNING

DO NOT reuse refrigerant piping that has been used with any other refrigerant. Replace the refrigerant pipes or clean thoroughly.

Special requirements for R32 (see "7.1.1 Installation site requirements of the outdoor unit" [▶ 62])

WARNING

- Do NOT pierce or burn refrigerant cycle parts.
- Do NOT use means to accelerate the defrosting process or to clean the equipment, other than those recommended by the manufacturer.
- Be aware that R32 refrigerant does NOT contain an odour.

WARNING

The appliance shall be stored so as to prevent mechanical damage and in a well-ventilated room without continuously operating ignition sources (example: open flames, an operating gas appliance or an operating electric heater).

WARNING

Make sure installation, servicing, maintenance and repair comply with instructions from Daikin and with applicable legislation (for example national gas regulation) and are executed ONLY by authorised persons.



WARNING

For units using the R32 refrigerant it is necessary to keep any required ventilation openings clear of obstructions.

Opening and closing the unit (see "7.2 Opening and closing the units" [▶ 71])



DANGER: RISK OF ELECTROCUTION

Do NOT leave the unit unattended when the service cover is removed.



DANGER: RISK OF ELECTROCUTION



DANGER: RISK OF BURNING/SCALDING

Mounting the outdoor unit (see "7.3 Mounting the outdoor unit" [▶ 74])



WARNING

Fixing method of the outdoor unit MUST be in accordance with the instructions from this manual. See "7.3 Mounting the outdoor unit" [▶ 74].



CAUTION

Do NOT remove the protective cardboard before the unit is installed properly.

Mounting the indoor unit (see "7.4 Mounting the indoor unit" [▶ 81])



WARNING

Fixing method of the indoor unit MUST be in accordance with the instructions from this manual. See "7.4 Mounting the indoor unit" [▶ 81].

Piping installation (see "8 Piping installation" [▶ 84])



WARNING

Field piping MUST be in accordance with the instructions from this manual. See "8 Piping installation" [▶ 84].



DANGER: RISK OF BURNING/SCALDING



CAUTION

- Incomplete flaring may cause refrigerant gas leakage.
- Do NOT re-use flares. Use new flares to prevent refrigerant gas leakage.
- Use flare nuts that are included with the unit. Using different flare nuts may cause refrigerant gas leakage.



WARNING

If the total refrigerant charge in the system is ≥1.84 kg (i.e. if the piping length is ≥27 m), you need to comply with the minimum floor area requirements for the indoor unit. For more information, see "7.1.3 Installation site requirements of the indoor unit" [▶ 65].

WARNING

- Only use R32 as refrigerant. Other substances may cause explosions and accidents.
- R32 contains fluorinated greenhouse gases. Its global warming potential (GWP) value is 675. Do NOT vent these gases into the atmosphere.
- When charging refrigerant, ALWAYS use protective gloves and safety glasses.

Electrical installation (see "9 Electrical installation" [▶ 106])

DANGER: RISK OF ELECTROCUTION

WARNING

Electrical wiring MUST be in accordance with the instructions from:

- This manual. See "9 Electrical installation" [▶ 106].
- The wiring diagram of the outdoor unit, which is delivered with the unit, located on the inside of the top plate. For a translation of its legend, see "16.3 Wiring diagram: Outdoor unit" [▶ 265].
- The wiring diagram of the indoor unit, which is delivered with the unit, located on the inside of the indoor unit upper front panel. For a translation of its legend, see "16.4 Wiring diagram: Indoor unit" [▶ 267].

WARNING

ALWAYS use multicore cable for power supply cables.

WARNING

- All wiring MUST be performed by an authorised electrician and MUST comply with the national wiring regulation.
- Make electrical connections to the fixed wiring.
- All components procured on-site and all electrical construction MUST comply with the applicable legislation.

WARNING

- If the power supply has a missing or wrong N-phase, equipment might break down.
- Establish proper earthing. Do NOT earth the unit to a utility pipe, surge absorber, or telephone earth. Incomplete earthing may cause electrical shocks.
- Install the required fuses or circuit breakers.
- Secure the electrical wiring with cable ties so that the cables do NOT come in contact with sharp edges or piping, particularly on the high-pressure side.
- Do NOT install a phase advancing capacitor, because this unit is equipped with an inverter. A phase advancing capacitor will reduce performance and may cause accidents.

CAUTION

Do NOT push or place redundant cable length into the unit.

WARNING

Do NOT extend the power supply or the interconnection cable by using wire connectors, wire connection clamps, taped wires, extension cords.

These can cause overheating, electric shock or fire.

WARNING

The backup heater MUST have a dedicated power supply and MUST be protected by the safety devices required by the applicable legislation.

CAUTION

If the indoor unit has a separate tank with a built-in electrical booster heater, use a dedicated power circuit for the backup heater and booster heater. NEVER use a power circuit shared by another appliance. This power circuit MUST be protected with the required safety devices according to the applicable legislation.

CAUTION

To guarantee the unit is completely earthed, ALWAYS connect the backup heater power supply and the earth cable.

INFORMATION

For details on the fuse ratings, the fuse types and the circuit breaker ratings, see "9 Electrical installation" [▸ 106].

Configuration (see "10 Configuration" [▸ 135])

CAUTION

The disinfection function settings MUST be configured by the installer according to the applicable legislation.

WARNING

Be aware that the domestic hot water temperature at the hot water tap will be equal to the value selected in field setting [2-03] after a disinfection operation.

When the high domestic hot water temperature can be a potential risk for human injuries, a mixing valve (field supply) shall be installed at the hot water outlet connection of the domestic hot water tank. This mixing valve shall secure that the hot water temperature at the hot water tap never rise above a set maximum value. This maximum allowable hot water temperature shall be selected according to the applicable legislation.

CAUTION

Make sure that the disinfection function start time [5.7.3] with defined duration [5.7.5] is NOT interrupted by possible domestic hot water demand.

CAUTION

`BSH allowance schedule` [9.4.2] is used to restrict or allow booster heater operation based on a weekly program. Advice: In order to avoid unsuccessful disinfection function, at least allow the booster heater (by the weekly program) for minimum 4 hours starting from the scheduled start-up of disinfection. If the booster heater is restricted during disinfection, this function will NOT be successful and the applicable warning AH will be generated.

Commissioning (see "11 Commissioning" [▸ 232])

WARNING

Commissioning MUST be in accordance with the instructions from this manual. See "11 Commissioning" [▸ 232].

Maintenance and service (see "13 Maintenance and service" [▸ 243])



DANGER: RISK OF ELECTROCUTION



DANGER: RISK OF BURNING/SCALDING



CAUTION

Water coming out of the valve may be very hot.



WARNING

If the internal wiring is damaged, it has to be replaced by the manufacturer, its service agent or similarly qualified persons.

Troubleshooting (see "14 Troubleshooting" [▸ 249])



DANGER: RISK OF ELECTROCUTION



DANGER: RISK OF BURNING/SCALDING



WARNING

- When carrying out an inspection on the switch box of the unit, ALWAYS make sure that the unit is disconnected from the mains. Turn off the respective circuit breaker.
- When a safety device was activated, stop the unit and find out why the safety device was activated before resetting it. NEVER shunt safety devices or change their values to a value other than the factory default setting. If you are unable to find the cause of the problem, call your dealer.



WARNING

Prevent hazards due to inadvertent resetting of the thermal cut-out: power to this appliance MUST NOT be supplied through an external switching device, such as a timer, or connected to a circuit that is regularly turned ON and OFF by the utility.



WARNING

Air purging heat emitters or collectors. Before you purge air from heat emitters or collectors, check if 🔔 or ⚠ is displayed on the home screen of the user interface.

- If not, you can purge air immediately.
- If yes, make sure that the room where you want to purge air is sufficiently ventilated. **Reason:** In case of a breakdown, refrigerant might leak into the water circuit, and subsequently into the room when you purge air from the heat emitters or collectors.

Disposal (see "15 Disposal" [▸ 260])



DANGER: RISK OF EXPLOSION

Pump down – Refrigerant leakage. If you want to pump down the system, and there is a leak in the refrigerant circuit:

- Do NOT use the unit's automatic pump down function, with which you can collect all refrigerant from the system into the outdoor unit. **Possible consequence:** Self-combustion and explosion of the compressor because of air going into the operating compressor.
- Use a separate recovery system so that the unit's compressor does NOT have to operate.

4 About the box

Keep the following in mind:

- At delivery, the unit MUST be checked for damage and completeness. Any damage or missing parts MUST be reported immediately to the claims agent of the carrier.
- Bring the packed unit as close as possible to its final installation position to prevent damage during transport.
- Prepare in advance the path along which you want to bring the unit to its final installation position.

In this chapter

4.1 Outdoor unit 22
4.1.1 To unpack the outdoor unit 22
4.1.2 To handle the outdoor unit 22
4.1.3 To remove the accessories from the outdoor unit 23
4.2 Indoor unit 24
4.2.1 To unpack the indoor unit 24
4.2.2 To remove the accessories from the indoor unit 24

4.1 Outdoor unit

4.1.1 To unpack the outdoor unit

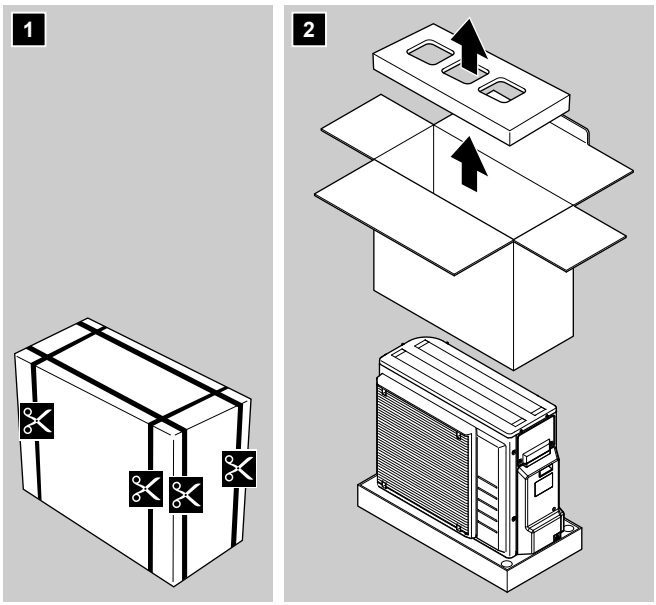

4.1.2 To handle the outdoor unit

CAUTION

To avoid injury, do NOT touch the air inlet or aluminium fins of the unit.

1 Handle the unit using the sling to the left and the handle to the right. Pull up both sides of the sling at the same time to prevent disconnection of the sling from the unit.

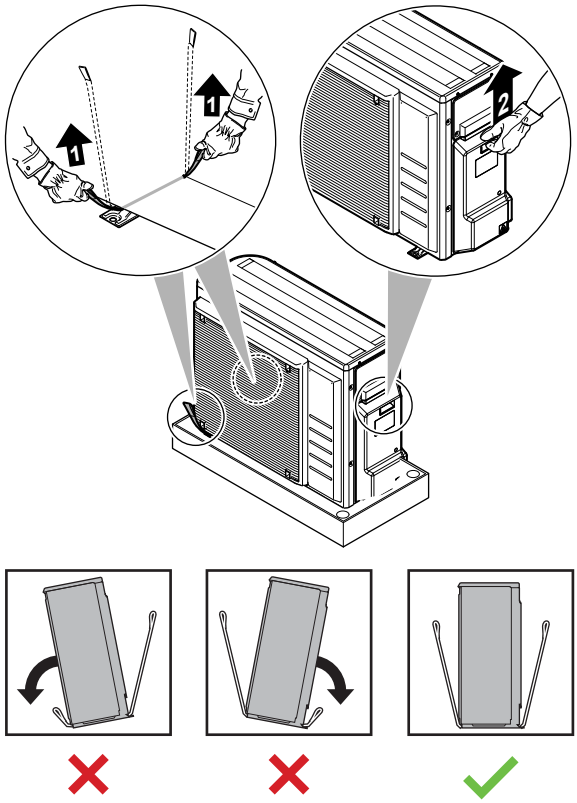

2 While handling the unit:

- Keep both sides of the sling level.
- Keep your back straight.

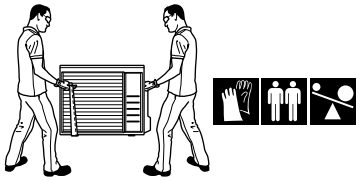

3 After mounting the unit, remove the sling from the unit by pulling 1 side of the sling.

4.1.3 To remove the accessories from the outdoor unit

1 Lift the outdoor unit. See "4.1.2 To handle the outdoor unit" [▸ 22].

2 Remove the accessories at the bottom of the package.

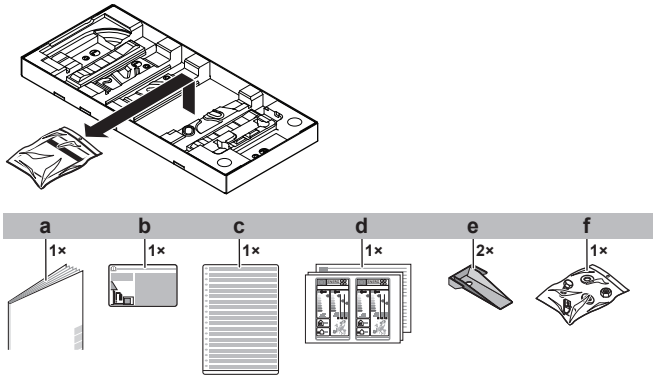

a Outdoor unit installation manual

b Fluorinated greenhouse gases label
c Multilingual fluorinated greenhouse gases label
d Energy label
e Unit mounting plate
f Bolts, nuts, washers, spring washers and wire clamp

4.2 Indoor unit

4.2.1 To unpack the indoor unit

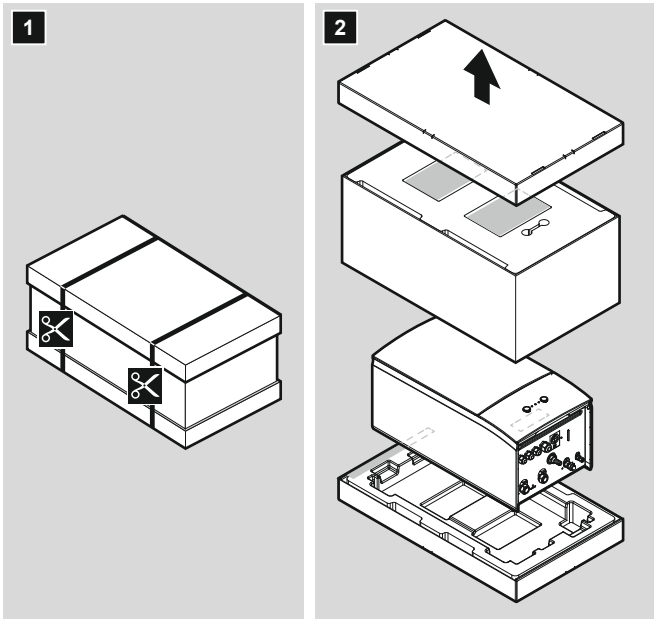

4.2.2 To remove the accessories from the indoor unit

Some accessories are located inside the unit. For more information on opening the unit, see "7.2.4 To open the indoor unit" [▸ 72].

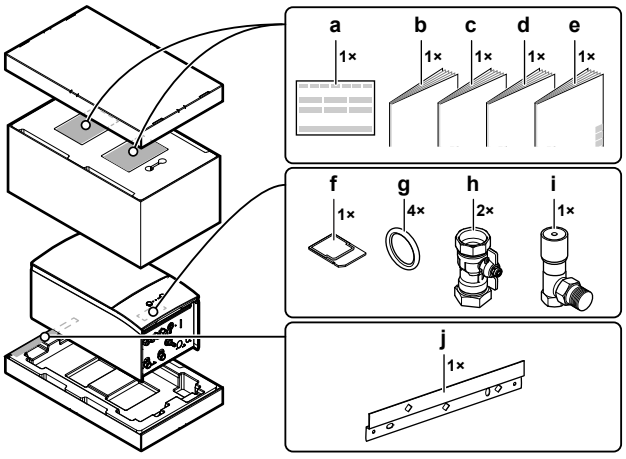

a Declaration of conformity
b General safety precautions
c Addendum book for optional equipment
d Indoor unit installation manual
e Operation manual
f WLAN cartridge
g Sealing ring for shut-off valve
h Shut-off valve
i Differential pressure bypass valve
j Wall bracket

5 About the units and options

In this chapter

5.1 Identification 25
5.1.1 Identification label: Outdoor unit 25
5.1.2 Identification label: Indoor unit 26
5.2 Combining units and options 26
5.2.1 Possible combinations of indoor unit and outdoor unit 26
5.2.2 Possible combinations of indoor unit and domestic hot water tank 26
5.2.3 Possible options for the outdoor unit 26
5.2.4 Possible options for the indoor unit 27

5.1 Identification

5.1.1 Identification label: Outdoor unit

Location

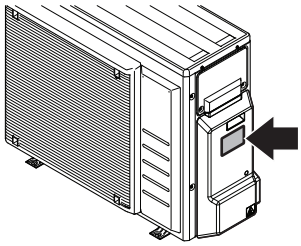

Model identification

Example: ER G A 08 EA V3 H 7

Code	Explanation
ER	European split outdoor pair heat pump
G	Medium water temperature – ambient zone (see operation range)
A	Refrigerant R32
08	Capacity class
EA	Model series
V3	Power supply
H	[—]=Non-Austrian model H=Non-Austrian model (30 m height difference allowed if outdoor unit is at highest location) A=Austrian model
7	Model series

5.1.2 Identification label: Indoor unit

Location

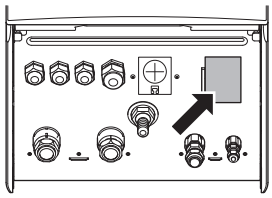

Model identification

Example: E HB H 04 EF 6V

Code	Description
E	European model
HB	Wall-mounted indoor unit
H	H=Heating only X=Heating/cooling
04	Capacity class
EF	Model series
6V	Backup heater model

5.2 Combining units and options

INFORMATION

Certain options may NOT be available in your country.

5.2.1 Possible combinations of indoor unit and outdoor unit

Indoor unit	Outdoor unit		
	ERGA04	ERGA06	ERGA08
EHBH/X04	O	—	—
EHBH/X08	—	O	O

5.2.2 Possible combinations of indoor unit and domestic hot water tank

Indoor unit	Domestic hot water tank		
	EKHWS	EKHWSU	EKHWP
EHBH/X04	O	O	O
EHBH/X08	O	O	O

5.2.3 Possible options for the outdoor unit

Drain pan kit (EKDP008D)

The drain pan kit is required to gather the drain from the outdoor unit. The drain pan kit consists of:

- Drain pan
- Installation brackets

For installation instructions, see the installation manual of the drain pan.

Drain pan heater (EKDPH008CA)

The drain pan heater is required to avoid freezing-up of the drain pan.

It is recommended to install this option in colder regions with possible low ambient temperatures or heavy snowfall.

For installation instructions, see the installation manual of the drain pan heater.

U-beams (EKFT008D)

The U-beams are installation brackets on which the outdoor unit can be installed.

It is recommended to install this option in colder regions with possible low ambient temperatures or heavy snowfall.

For installation instructions, see the installation manual of the outdoor unit.

Low sound cover (EKLN08A1)

In sound sensitive areas (e.g. near a bedroom), you can install the low sound cover to decrease the operation noise of the outdoor unit.

You can install the low sound cover:

- On mounting feet to the ground. This must withstand 200 kg.
- On brackets to the wall. This must withstand 200 kg.

If you install the low sound cover, you also need to install one of the following options:

- Recommended: Drain pan kit (with or without drain pan heater)
- U-beams

For installation instructions, see the installation manual of the low sound cover.

5.2.4 Possible options for the indoor unit

Multi-zoning wired controls

You can connect the following multi-zoning wired controls:

- Multi-zoning base unit 230 V (EKWUFHTA1V3)
- Digital thermostat 230 V (EKWCTRDI1V3)
- Analogue thermostat 230 V (EKWCTRAN1V3)
- Actuator 230 V (EKWCVATR1V3)

For installation instructions, see the installation manual of the control, and the addendum book for optional equipment.

Room thermostat (EKRTWA, EKRTR1, EKRTRB)

You can connect an optional room thermostat to the indoor unit. This thermostat can either be wired (EKRTWA) or wireless (EKRTR1, EKRTRB).

For installation instructions, see the installation manual of the room thermostat and addendum book for optional equipment.

Remote sensor for wireless thermostat (EKRTETS)

You can use the remote indoor temperature sensor (EKRTETS) only in combination with the wireless thermostat (EKRTR1 or EKRTRB).

For installation instructions, see the installation manual of the room thermostat and the addendum book for optional equipment.

Digital I/O PCB (EKRP1HBAA)

The digital I/O PCB is required to provide following signals:

- Alarm output
- Space heating/cooling ON/OFF output
- Changeover to external heat source

For installation instructions, see the installation manual of the digital I/O PCB and addendum book for optional equipment.

Demand PCB (EKRP1AHTA)

To enable the power saving consumption control by digital inputs you MUST install the demand PCB.

For installation instructions, see the installation manual of the demand PCB and addendum book for optional equipment.

Remote indoor sensor (KRCS01-1)

By default the internal sensor of the dedicated Human Comfort Interface (BRC1HHDA used as room thermostat) will be used as room temperature sensor.

As an option the remote indoor sensor can be installed to measure the room temperature on another location.

For installation instructions, see the installation manual of the remote indoor sensor and addendum book for optional equipment.

INFORMATION

- The remote indoor sensor can only be used in case the user interface is configured with room thermostat functionality.
- You can only connect either the remote indoor sensor or the remote outdoor sensor.

Remote outdoor sensor (EKRSCA1)

By default the sensor inside the outdoor unit will be used to measure the outdoor temperature.

As an option the remote outdoor sensor can be installed to measure the outdoor temperature on another location (e.g. to avoid direct sunlight) to have an improved system behaviour.

For installation instructions, see the installation manual of the remote outdoor sensor and the addendum book for optional equipment.

INFORMATION

You can only connect either the remote indoor sensor or the remote outdoor sensor.

PC cable (EKPCCAB4)

The PC cable makes a connection between the hydro PCB (A1P) of the indoor unit and a PC. It gives the possibility to update the hydro software and EEPROM.

For installation instructions, see:

- Installation manual of the PC cable
- "10.1.2 To connect the PC cable to the switch box" [▸ 138]

Heat pump convector (FWX*)

For providing space heating/cooling, it is possible to use the following heat pump convectors:

- FWXV: floor-standing model
- FWXT: wall-mounted model
- FWXM: concealed model

For installation instructions, see:

- The installation manual of the heat pump convector
- The installation manual of the heat pump convector options
- The addendum book for optional equipment

WLAN module (BRP069A71)

A WLAN cartridge (to be plugged into the MMI) is delivered as indoor unit accessory. Alternatively (e.g. in case of weak signal strength), you can install the optional wireless LAN module BRP069A71.

For installation instructions, see the installation manual of the WLAN module and the addendum book for optional equipment.

LAN adapter for smartphone control (BRP069A62)

You can install this LAN adapter to control the system via a smartphone app.

For installation instructions, see the installation manual of the LAN adapter and the addendum book for optional equipment.

Bizone kit (BZKA7V3)

You can install an optional bizone kit.

For installation instructions, see the installation manual of the bizone kit.

Connection kit for third-party tank (EKHY3PART)

Required when connecting a third-party tank to the system.

Contains a thermistor, a 3-way valve, and a contactor K3M – terminal X7M assembly.

For installation instructions, see the installation manual of the connection kit.

Domestic hot water tank

The following domestic hot water tanks are available:

Tank	Remark
Stainless steel tank (standard): ▪ EKHWS150D3V3 / EKHWSP150D3V3 ▪ EKHWS180D3V3 / EKHWSP180D3V3 ▪ EKHWS200D3V3 / EKHWSP200D3V3 ▪ EKHWS250D3V3 / EKHWSP250D3V3 ▪ EKHWS300D3V3 / EKHWSP300D3V3	Inclusive booster heater
Stainless steel tank (+ components): ▪ EKHWSU150D3V3 ▪ EKHWSU180D3V3 ▪ EKHWSU200D3V3 ▪ EKHWSU250D3V3 ▪ EKHWSU300D3V3	Inclusive: ▪ Booster heater ▪ Components to comply with the UK Building Regulation G3.

Tank	Remark
Polypropylene tank: ▪ EKHWP300B ▪ EKHWP500B	Tank with drainback solar system. For these tanks, the booster heater option (EKBH3SD) must be installed.
Polypropylene tank: ▪ EKHWP300PB ▪ EKHWP500PB	Tank with pressurised solar system. For these tanks, the booster heater option (EKBH3SD) must be installed.

For installation instructions, see the installation manual of the domestic hot water tank, and the addendum book for optional equipment.

Human Comfort Interface (BRC1HHDA) used as room thermostat

- The Human Comfort Interface (HCI) used as room thermostat can only be used in combination with the user interface connected to the indoor unit.
- The Human Comfort Interface (HCI) used as room thermostat needs to be installed in the room that you want to control.

For installation instructions, see the installation and operation manual of the Human Comfort Interface (HCI) as room thermostat, and the addendum book for optional equipment.

Smart grid relay kit (EKRELSG)

The installation of the optional Smart grid relay kit is required in case of high voltage Smart grid contacts (EKRELSG).

For installation instructions, see "9.3.11 Smart Grid" [▸ 129].

6 Application guidelines

INFORMATION

Cooling is only applicable in case of reversible models.

In this chapter

6.1 Overview: Application guidelines ... 31
6.2 Setting up the space heating/cooling system ... 32
6.2.1 Single room ... 33
6.2.2 Multiple rooms – One LWT zone ... 37
6.2.3 Multiple rooms – Two LWT zones ... 42
6.3 Setting up an auxiliary heat source for space heating ... 45
6.4 Setting up the domestic hot water tank ... 47
6.4.1 System layout – Standalone DHW tank ... 47
6.4.2 Selecting the volume and desired temperature for the DHW tank ... 47
6.4.3 Setup and configuration – DHW tank ... 49
6.4.4 DHW pump for instant hot water ... 50
6.4.5 DHW pump for disinfection ... 50
6.4.6 DHW pump for tank preheating ... 51
6.5 Setting up the energy metering ... 52
6.5.1 Produced heat ... 53
6.5.2 Consumed energy ... 53
6.5.3 Normal kWh rate power supply ... 54
6.5.4 Preferential kWh rate power supply ... 55
6.6 Setting up the power consumption control ... 56
6.6.1 Permanent power limitation ... 57
6.6.2 Power limitation activated by digital inputs ... 57
6.6.3 Power limitation process ... 59
6.6.4 BBR16 power limitation ... 59
6.7 Setting up an external temperature sensor ... 60

6.1 Overview: Application guidelines

The purpose of the application guidelines is to give a glance of the possibilities of the heat pump system.

NOTICE

- The illustrations in the application guidelines are meant for reference only, and are NOT to be used as detailed hydraulic diagrams. The detailed hydraulic dimensioning and balancing are NOT shown, and are the responsibility of the installer.
- For more information about the configuration settings to optimize heat pump operation, see "10 Configuration" [▶ 135].

This chapter contains application guidelines for:

- Setting up the space heating/cooling system
- Setting up an auxiliary heat source for space heating
- Setting up the domestic hot water tank
- Setting up the energy metering
- Setting up the power consumption control
- Setting up an external temperature sensor

NOTICE

Certain types of fan coil units –in this document referred to as "heat pump convectors"–, are able to receive input of the indoor unit operation mode (cooling or heating X2M/3 and X2M/4) and/or to send output of the heat pump convector thermostatic condition (main zone: X2M/30 and X2M/35; additional zone: X2M/30 and X2M/35a).

The application guidelines illustrate the possibility of receiving or sending digital input/output. This functionality can only be used in case the heat pump convector has such features and the signals meet following requirements:

- Output of indoor unit (input to heat pump convector): cooling/heating signal=230 V (cooling=230 V, heating=0 V).
- Input to indoor unit (output of heat pump convector): thermostat ON/OFF signal=voltage-free contact (closed contact=thermo ON, open contact=thermo OFF).

6.2 Setting up the space heating/cooling system

The heat pump system supplies leaving water to heat emitters in one or more rooms.

Because the system offers a wide flexibility to control the temperature in each room, you need to answer the following questions first:

- How many rooms are heated or cooled by the heat pump system?
- Which heat emitter types are used in each room and what is their design leaving water temperature?

Once the space heating/cooling requirements are clear, we recommend to follow the setup guidelines below.

NOTICE

If an external room thermostat is used, the external room thermostat will control the room frost protection. However, the room frost protection is only possible if [C.2] `Space heating/cooling`=`On`.

INFORMATION

In case an external room thermostat is used and room frost protection needs to be guaranteed in all conditions, then you have to set `Emergency` [9.5.1] to one of the following:

- `Automatic`
- `auto SH reduced/DHW on`
- `auto SH reduced/DHW off`
- `auto SH normal/DHW off`

NOTICE

A differential pressure bypass valve can be integrated in the system. Keep in mind that this valve might not be shown on the illustrations.

6.2.1 Single room

Underfloor heating or radiators – Wired room thermostat

Setup

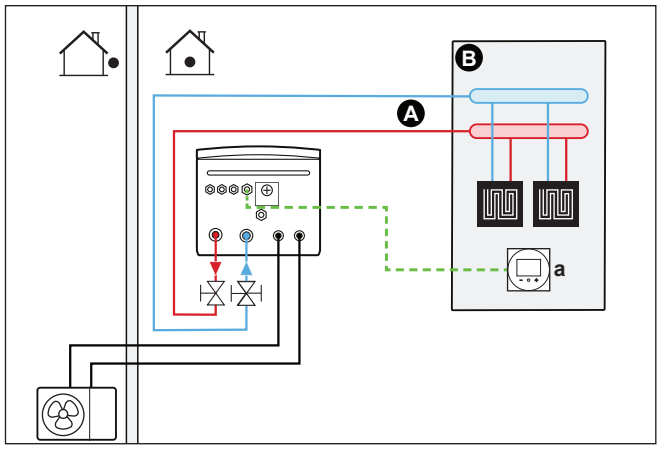

A Main leaving water temperature zone
B One single room
a Dedicated Human Comfort Interface (BRC1HHDA used as room thermostat)

- For more information about connecting the electrical wiring to the unit, see:
  - "9.2 Connections to the outdoor unit" [▸ 110]
  - "9.3 Connections to the indoor unit" [▸ 113]
- The underfloor heating or radiators are directly connected to the indoor unit.
- The room temperature is controlled by the dedicated Human Comfort Interface (BRC1HHDA used as room thermostat).

Configuration

Setting	Value
Unit temperature control: ▪ #: [2.9] ▪ Code: [C-07]	2 (`Room thermostat`): Unit operation is decided based on the ambient temperature of the user interface.
Number of water temperature zones: ▪ #: [4.4] ▪ Code: [7-02]	0 (`Single zone`): Main

Benefits

- **Highest comfort and efficiency**. The smart room thermostat functionality can decrease or increase the desired leaving water temperature based on the actual room temperature (modulation). This results in:
  - Stable room temperature matching the desired temperature (higher comfort)
  - Less ON/OFF cycles (more quiet, higher comfort and higher efficiency)
  - Lowest possible leaving water temperature (higher efficiency)
- **Easy**. You can easily set the desired room temperature via the user interface:
  - For your daily needs, you can use preset values and schedules.
  - To deviate from your daily needs, you can temporarily overrule the preset values and schedules, or use the holiday mode.

Underfloor heating or radiators – Wireless room thermostat

Setup

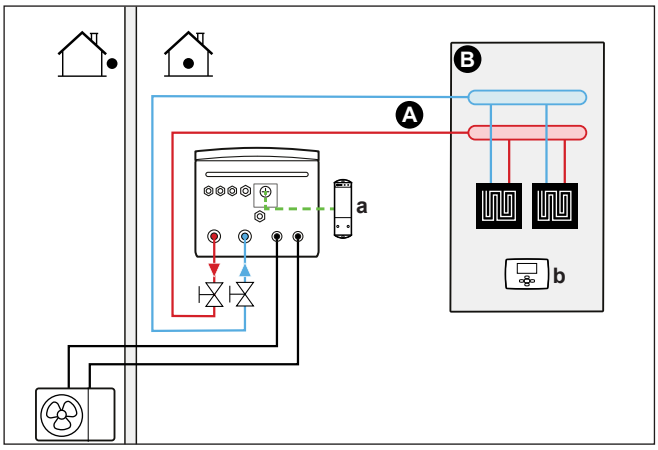

A Main leaving water temperature zone
B One single room
a Receiver for wireless external room thermostat
b Wireless external room thermostat

- For more information about connecting the electrical wiring to the unit, see:
  - "9.2 Connections to the outdoor unit" [▸ 110]
  - "9.3 Connections to the indoor unit" [▸ 113]
- The underfloor heating or radiators are directly connected to the indoor unit.
- The room temperature is controlled by the wireless external room thermostat (optional equipment EKRTR1 or EKRTRB).

Configuration

Setting	Value
Unit temperature control: ▪ #: [2.9] ▪ Code: [C-07]	1 (`External room thermostat`): Unit operation is decided by the external thermostat.
Number of water temperature zones: ▪ #: [4.4] ▪ Code: [7-02]	0 (`Single zone`): Main
External room thermostat for the **main** zone: ▪ #: [2.A] ▪ Code: [C-05]	1 (`1 contact`): When the used external room thermostat or heat pump convector can only send a thermo ON/OFF condition. No separation between heating or cooling demand.

Benefits

- **Wireless.** The Daikin external room thermostat is available in a wireless version.
- **Efficiency.** Although the external room thermostat only sends ON/OFF signals, it is specifically designed for the heat pump system.
- **Comfort.** In case of underfloor heating, the wireless external room thermostat prevents condensation on the floor during cooling operation by measuring the room humidity.

Heat pump convectors

Setup

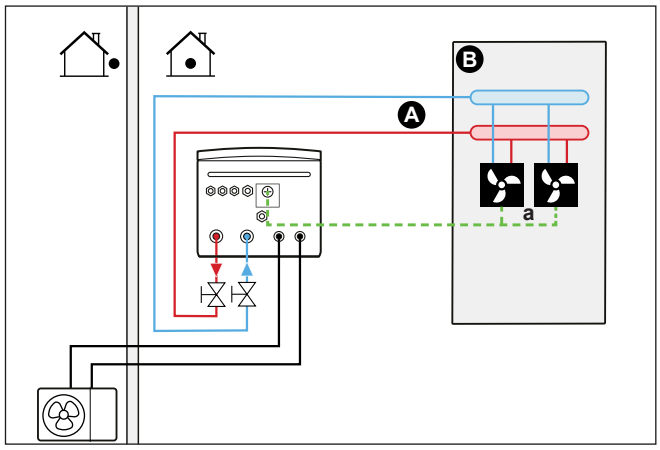

A Main leaving water temperature zone
B One single room
a Heat pump convectors (+ controllers)

- For more information about connecting the electrical wiring to the unit, see:
  - "9.2 Connections to the outdoor unit" [▸ 110]
  - "9.3 Connections to the indoor unit" [▸ 113]
- The heat pump convectors are directly connected to the indoor unit.
- The desired room temperature is set via the controller of the heat pump convectors. There are different controllers and setups possible for the heat pump convectors. For more information, see:
  - The installation manual of the heat pump convectors
  - The installation manual of the heat pump convector options
  - The addendum book for optional equipment
- The space heating/cooling demand signal is sent to one digital input on the indoor unit (X2M/35 and X2M/30).
- The space operation mode is sent to the heat pump convectors by one digital output on the indoor unit (X2M/4 and X2M/3).

Configuration

Setting	Value
Unit temperature control: ▪ #: [2.9] ▪ Code: [C-07]	1 (`External room thermostat`): Unit operation is decided by the external thermostat.
Number of water temperature zones: ▪ #: [4.4] ▪ Code: [7-02]	0 (`Single zone`): Main
External room thermostat for the **main** zone: ▪ #: [2.A] ▪ Code: [C-05]	1 (`1 contact`): When the used external room thermostat or heat pump convector can only send a thermo ON/OFF condition. No separation between heating or cooling demand.

Benefits

- **Cooling.** The heat pump convector offers, besides heating capacity, also excellent cooling capacity.
- **Efficiency.** Optimal energy efficiency because of the interlink function.
- **Stylish.**

Combination: Underfloor heating + Heat pump convectors

- Space heating is provided by:
  - The underfloor heating
  - The heat pump convectors
- Space cooling is provided by the heat pump convectors only. The underfloor heating is shut off by the shut-off valve.

Setup

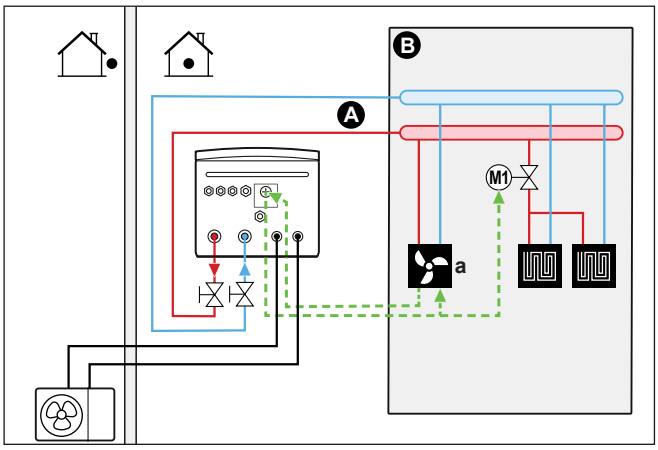

A Main leaving water temperature zone
B One single room
a Heat pump convectors (+ controllers)

- For more information about connecting the electrical wiring to the unit, see:
  - "9.2 Connections to the outdoor unit" [▸ 110]
  - "9.3 Connections to the indoor unit" [▸ 113]
- The heat pump convectors are directly connected to the indoor unit.
- A shut-off valve (field supply) is installed before the underfloor heating to prevent condensation on the floor during cooling operation.
- The desired room temperature is set via the controller of the heat pump convectors. There are different controllers and setups possible for the heat pump convectors. For more information, see:
  - The installation manual of the heat pump convectors
  - The installation manual of the heat pump convector options
  - The addendum book for optional equipment
- The space heating/cooling demand signal is sent to one digital input on the indoor unit (X2M/35 and X2M/30).
- The space operation mode is sent by one digital output (X2M/4 and X2M/3) on the indoor unit to:
  - The heat pump convectors
  - The shut-off valve

Configuration

Setting	Value
Unit temperature control: ▪ #: [2.9] ▪ Code: [C-07]	1 (`External room thermostat`): Unit operation is decided by the external thermostat.
Number of water temperature zones: ▪ #: [4.4] ▪ Code: [7-02]	0 (`Single zone`): Main
External room thermostat for the **main** zone: ▪ #: [2.A] ▪ Code: [C-05]	1 (`1 contact`): When the used external room thermostat or heat pump convector can only send a thermo ON/OFF condition. No separation between heating or cooling demand.

Benefits

- **Cooling.** Heat pump convectors provide, besides heating capacity, also excellent cooling capacity.
- **Efficiency**. Underfloor heating has the best performance with the heat pump system.
- **Comfort.** The combination of the two heat emitter types provides:
  - The excellent heating comfort of the underfloor heating
  - The excellent cooling comfort of the heat pump convectors

6.2.2 Multiple rooms – One LWT zone

If only one leaving water temperature zone is needed because the design leaving water temperature of all heat emitters is the same, you do NOT need a mixing valve station (cost effective).

Example: If the heat pump system is used to heat up one floor where all the rooms have the same heat emitters.

NOTICE

It is possible to achieve room-by-room control by setting the Daikin Altherma unit temperature control for the desired zone (#: [1.12] and [1.13]) to `Leaving water`, in combination with separate room thermostats to regulate the flow in each room. However, this solution could lead to situations where there is space heating/cooling generation by the Daikin Altherma unit when there is no room that has any request for it. Contrarily, it is possible that no space cooling/heating is generated by the the Daikin Altherma unit while there are rooms with a request for it. Note that traditional room-based thermostats can also not be integrated in the ONECTA app.

To achieve more user-friendly and efficient demand-based, room-by-room control, integrate the Daikin Altherma unit into the Daikin Home Controls ecosystem. A DHC configuration requires the unit temperature control for the desired zone (#: [1.12] and [1.13]) to be set to `External room thermostat`. This allows the DHC ecosystem to request space/heating cooling demand when a room requires it. It is then possible to regulate the temperature for each room, using the ONECTA app to configure individual room setpoints or schedules.

For more information about room-by-room control and application examples, see the Daikin Home Controls application guide.

Underfloor heating or radiators – Thermostatic valves

If you are heating up rooms with underfloor heating or radiators, a very common way is to control the temperature of the main room by using a thermostat (this can

either be the user interface or an external room thermostat), while the other rooms are controlled by so-called thermostatic valves, which open or close depending on the room temperature.

Setup

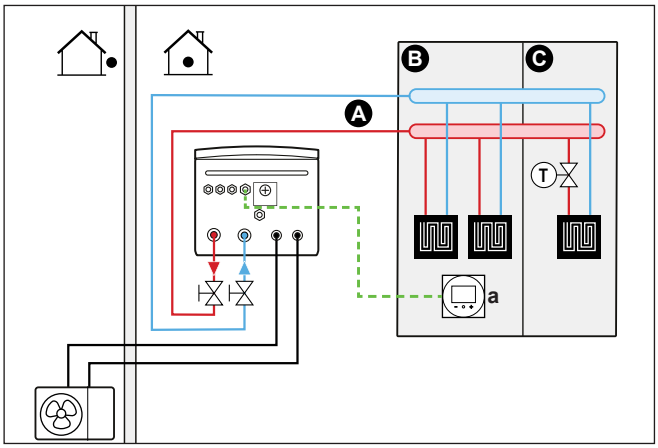

A Main leaving water temperature zone
B Room 1
C Room 2
a Dedicated Human Comfort Interface (BRC1HHDA used as room thermostat)

- For more information about connecting the electrical wiring to the unit, see:
  - "9.2 Connections to the outdoor unit" [▸ 110]
  - "9.3 Connections to the indoor unit" [▸ 113]
- The underfloor heating of the main room is directly connected to the indoor unit.
- The room temperature of the main room is controlled by the dedicated Human Comfort Interface (BRC1HHDA used as room thermostat).
- A thermostatic valve is installed before the underfloor heating in each of the other rooms.

INFORMATION

Mind situations where the main room can be heated by another heating source. Example: Fireplaces.

Configuration

Setting	Value
Unit temperature control: ▪ #: [2.9] ▪ Code: [C-07]	2 (`Room thermostat`): Unit operation is decided based on the ambient temperature of the user interface.
Number of water temperature zones: ▪ #: [4.4] ▪ Code: [7-02]	0 (`Single zone`): Main

Benefits

- **Easy**. Same installation as for one room, but with thermostatic valves.

Underfloor heating or radiators – Multiple external room thermostats

Setup

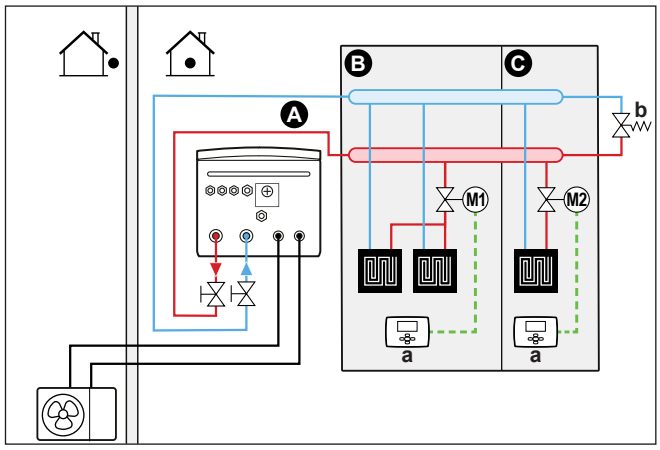

A Main leaving water temperature zone
B Room 1
C Room 2
a External room thermostat
b Bypass valve

- For more information about connecting the electrical wiring to the unit, see:
  - "9.2 Connections to the outdoor unit" [▸ 110]
  - "9.3 Connections to the indoor unit" [▸ 113]
- For each room, a shut-off valve (field supplied) is installed to avoid leaving water supply when there is no heating or cooling demand.
- A bypass valve must be installed to make water recirculation possible when all shut-off valves are closed. To guarantee reliable operation, provide a minimum water flow as described in table "To check the water volume and flow rate" in "8.5 Preparing water piping" [▸ 97].
- The user interface integrated in the indoor unit decides the space operation mode. Mind that the operation mode on each room thermostat must be set to match the indoor unit.
- The room thermostats are connected to the shut-off valves, but do NOT have to be connected to the indoor unit. The indoor unit will supply leaving water all the time, with the possibility to program a leaving water schedule.

Configuration

Setting	Value
Unit temperature control: ▪ #: [2.9] ▪ Code: [C-07]	0 (`Leaving water`): Unit operation is decided based on the leaving water temperature.
Number of water temperature zones: ▪ #: [4.4] ▪ Code: [7-02]	0 (`Single zone`): Main

Benefits

Compared with underfloor heating or radiators for one room:

- **Comfort.** You can set the desired room temperature, including schedules, for each room via the room thermostats.

Heat pump convectors – Multiple rooms

Setup

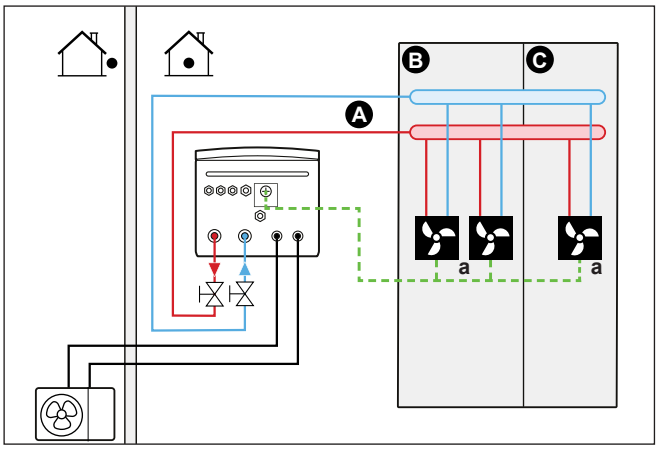

A Main leaving water temperature zone
B Room 1
C Room 2
a Heat pump convectors (+ controllers)

- For more information about connecting the electrical wiring to the unit, see:
  - "9.2 Connections to the outdoor unit" [▸ 110]
  - "9.3 Connections to the indoor unit" [▸ 113]
- The desired room temperature is set via the controller of the heat pump convectors. There are different controllers and setups possible for the heat pump convectors. For more information, see:
  - The installation manual of the heat pump convectors
  - The installation manual of the heat pump convector options
  - The addendum book for optional equipment
- The user interface integrated in the indoor unit decides the space operation mode.
- The heating or cooling demand signals of each heat pump convector are connected in parallel to the digital input on the indoor unit (X2M/35 and X2M/30). The indoor unit will only supply leaving water temperature when there is an actual demand.

INFORMATION

To increase comfort and performance, we recommend to install the valve kit option EKVKHPC on each heat pump convector.

Configuration

Setting	Value
Unit temperature control: ▪ #: [2.9] ▪ Code: [C-07]	1 (`External room thermostat`): Unit operation is decided by the external thermostat.
Number of water temperature zones: ▪ #: [4.4] ▪ Code: [7-02]	0 (`Single zone`): Main

Benefits

Compared with heat pump convectors for one room:

- **Comfort.** You can set the desired room temperature, including schedules, for each room via the remote controller of the heat pump convectors.

Combination: Underfloor heating + Heat pump convectors – Multiple rooms

Setup

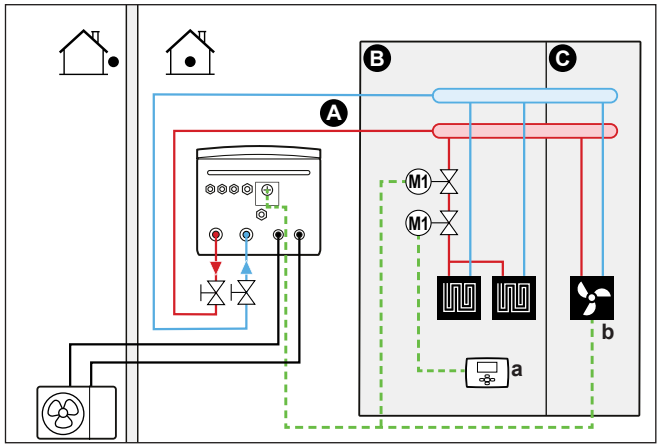

A Main leaving water temperature zone
B Room 1
C Room 2
a External room thermostat
b Heat pump convectors (+ controllers)

- For more information about connecting the electrical wiring to the unit, see:
  - "9.2 Connections to the outdoor unit" [▸ 110]
  - "9.3 Connections to the indoor unit" [▸ 113]
- For each room with heat pump convectors: The heat pump convectors are directly connected to the indoor unit.
- For each room with underfloor heating: Two shut-off valves (field supply) are installed before the underfloor heating:
  - A shut-off valve to prevent hot water supply when the room has no heating demand
  - A shut-off valve to prevent condensation on the floor during cooling operation of the rooms with heat pump convectors.
- For each room with heat pump convectors: The desired room temperature is set via the controller of the heat pump convectors. There are different controllers and setups possible for the heat pump convectors. For more information, see:
  - The installation manual of the heat pump convectors
  - The installation manual of the heat pump convector options
  - The addendum book for optional equipment
- For each room with underfloor heating: The desired room temperature is set via the external room thermostat (wired or wireless).
- The user interface integrated in the indoor unit decides the space operation mode. Mind that the operation mode on each external room thermostat and remote controller of the heat pump convectors must be set to match the indoor unit.

INFORMATION

To increase comfort and performance, we recommend to install the valve kit option EKVKHPC on each heat pump convector.

Configuration

Setting	Value
Unit temperature control: ▪ #: [2.9] ▪ Code: [C-07]	0 (`Leaving water`): Unit operation is decided based on the leaving water temperature.
Number of water temperature zones: ▪ #: [4.4] ▪ Code: [7-02]	0 (`Single zone`): Main

6.2.3 Multiple rooms – Two LWT zones

If the heat emitters selected for each room are designed for different leaving water temperatures, you can use different leaving water temperature zones (maximum 2).

In this document:

- Main zone = Zone with the lowest design temperature in heating, and the highest design temperature in cooling
- Additional zone = Zone with the highest design temperature in heating, and the lowest design temperature in cooling



CAUTION

If there is more than one leaving water zone, ALWAYS install a mixing valve station in the main zone to decrease (in heating)/increase (in cooling) the leaving water temperature when the additional zone has demand.

Typical example:

Room (zone)	Heat emitters: Design temperature
Living room (main zone)	Underfloor heating: ▪ In heating: 35°C ▪ In cooling[(a)]: 20°C (only refreshment, no real cooling allowed)
Bed rooms (additional zone)	Heat pump convectors: ▪ In heating: 45°C ▪ In cooling: 12°C

[(a)] In cooling mode, you can allow the underfloor heating (main zone) to provide refreshment (no real cooling), or NOT allow it. See setup below.

Setup

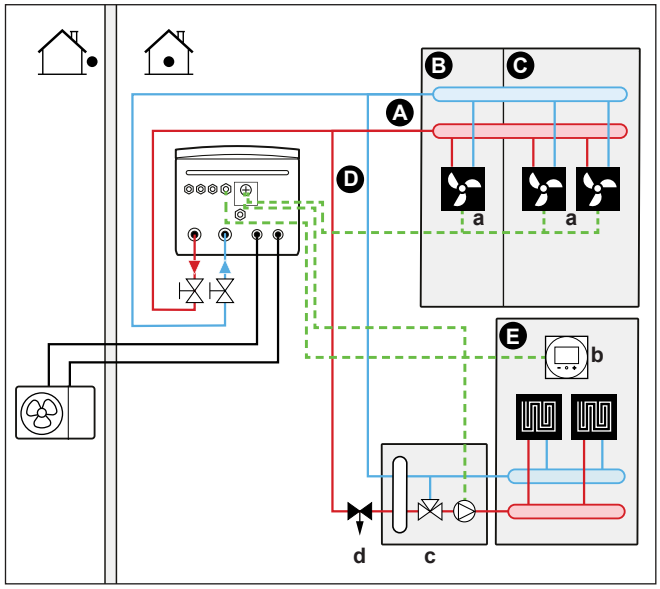

A Additional leaving water temperature zone
B Room 1
C Room 2
D Main leaving water temperature zone
E Room 3
a Heat pump convectors (+ controllers)
b Dedicated Human Comfort Interface (BRC1HHDA used as room thermostat)
c Mixing valve station
d Pressure regulating valve

INFORMATION

A pressure regulating valve should be implemented before the mixing valve station. This is to guarantee the correct water flow balance between the main leaving water temperature zone and the additional leaving water temperature zone in relation to the required capacity of both water temperature zones.

- For more information about connecting the electrical wiring to the unit, see:
  - "9.2 Connections to the outdoor unit" [▸ 110]
  - "9.3 Connections to the indoor unit" [▸ 113]
- For the main zone:
  - A mixing valve station is installed before the underfloor heating.
  - The pump of the mixing valve station is controlled by the ON/OFF signal on the indoor unit (X2M/29 and X2M/21; normally closed shut-off valve output).
  - The room temperature is controlled by the dedicated Human Comfort Interface (BRC1HHDA used as room thermostat).
- For the additional zone:
  - The heat pump convectors are directly connected to the indoor unit.
  - The desired room temperature is set via the controller of the heat pump convectors. There are different controllers and setups possible for the heat pump convectors. For more information, see:

    The installation manual of the heat pump convectors

    The installation manual of the heat pump convector options

    The addendum book for optional equipment
  - The heating or cooling demand signals of each heat pump convector are connected in parallel to the digital input on the indoor unit (X2M/35a and

X2M/30). The indoor unit will only supply the desired additional leaving water temperature when there is an actual demand.

- The user interface integrated in the indoor unit decides the space operation mode. Mind that the operation mode on each remote controller of the heat pump convectors must be set to match the indoor unit.

Configuration

Setting	Value
Unit temperature control: ▪ #: [2.9] ▪ Code: [C-07]	2 (`Room thermostat`): Unit operation is decided based on the ambient temperature of the dedicated Human Comfort Interface. **Note:** ▪ Main room = dedicated Human Comfort Interface used as room thermostat functionality ▪ Other rooms = external room thermostat functionality
Number of water temperature zones: ▪ #: [4.4] ▪ Code: [7-02]	1 (`Dual zone`): Main + additional
In case of heat pump convectors: External room thermostat for the **additional** zone: ▪ #: [3.A] ▪ Code: [C-06]	1 (`1 contact`): When the used external room thermostat or heat pump convector can only send a thermo ON/OFF condition. No separation between heating or cooling demand.
Shut-off valve output	Set to follow the thermo demand of the main zone.
Shut-off valve	If the main zone must be shut off during cooling mode to prevent condensation on the floor, set it accordingly.
At the mixing valve station	Set the desired main leaving water temperature for heating and/or cooling.

Benefits

- **Comfort.**
  - The smart room thermostat functionality can decrease or increase the desired leaving water temperature based on the actual room temperature (modulation).
  - The combination of the two heat emitter systems provides the excellent heating comfort of the underfloor heating, and the excellent cooling comfort of the heat pump convectors.
- **Efficiency.**
  - Depending on the demand, the indoor unit supplies different leaving water temperature matching the design temperature of the different heat emitters.
  - Underfloor heating has the best performance with the heat pump system.

6.3 Setting up an auxiliary heat source for space heating

INFORMATION

Bivalent is ONLY possible in case of ONE leaving water temperature zone with:

- room thermostat control, OR
- external room thermostat control.

- Space heating can be done by:
  - The indoor unit
  - An auxiliary boiler (field supply) connected to the system
- When there is a heating request, the indoor unit or the auxiliary boiler starts operating. Which of these units operates, depends on the outdoor temperature (status of the changeover to external heat source). When the permission is given to the auxiliary boiler, the space heating by the indoor unit is turned OFF.
- Bivalent operation is only possible if:
  - Space heating is turned ON, and
  - DHW tank operation is turned OFF
- Domestic hot water is always produced by the DHW tank connected to the indoor unit.

INFORMATION

- During heating operation of the heat pump, the heat pump operates to achieve the desired temperature set via the user interface. When weather-dependent operation is active, the water temperature is determined automatically depending on the outdoor temperature.
- During heating operation of the auxiliary boiler, the auxiliary boiler operates to achieve the desired water temperature set via the auxiliary boiler controller.

Setup

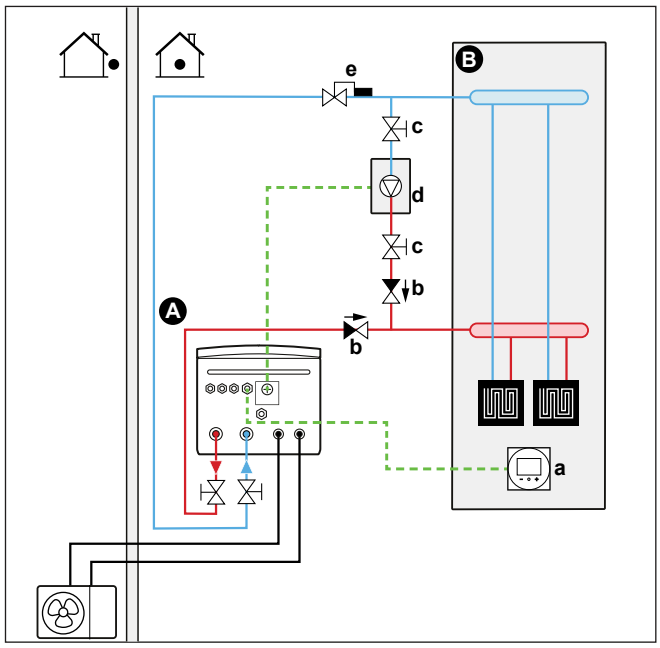

A Main leaving water temperature zone
B One single room
a Dedicated Human Comfort Interface (BRC1HHDA used as room thermostat)
b Non-return valve (field supply)
c Shut-off valve (field supply)

d Auxiliary boiler (field supply)
e Aquastat valve (field supply)

NOTICE

- Make sure the auxiliary boiler and its integration in the system complies with applicable legislation.
- Daikin is NOT responsible for incorrect or unsafe situations in the auxiliary boiler system.

- Make sure the return water to the heat pump does NOT exceed 55°C. To do so:
  - Set the desired water temperature via the auxiliary boiler controller to maximum 55°C.
  - Install an aquastat valve in the return water flow of the heat pump. Set the aquastat valve to close above 55°C and to open below 55°C.
- Install non-return valves.
- An expansion vessel is already pre-mounted in the indoor unit. But for bivalent operation, also make sure that there is an expansion vessel in the auxiliary boiler loop. Otherwise when bivalent operation is running and if the Aquastat valve would close, there would be no expansion vessel in the water circuit anymore.
- Install the digital I/O PCB (option EKRP1HBAA).
- Connect X1 and X2 (changeover to external heat source) on the digital I/O PCB to the auxiliary boiler. See "9.3.8 To connect the changeover to external heat source" [▸ 126].
- To setup the heat emitters, see "6.2 Setting up the space heating/cooling system" [▸ 32].

Configuration

Via the user interface (configuration wizard):

- Set the use of a bivalent system as external heat source.
- Set the bivalent temperature and hysteresis.
- Set the operation mode to space heating only (no tank operation).

NOTICE

- Make sure the bivalent hysteresis has enough differential to prevent frequent changeover between indoor unit and auxiliary boiler.
- Because the outdoor temperature is measured by the outdoor unit air thermistor, install the outdoor unit in the shadow so that it is NOT influenced or turned ON/OFF by direct sunlight.
- Frequent changeover may cause corrosion of the auxiliary boiler. Contact the manufacturer of the auxiliary boiler for more information.

Changeover to external heat source decided by an auxiliary contact

- Only possible in external room thermostat control AND one leaving water temperature zone (see "6.2 Setting up the space heating/cooling system" [▸ 32]).
- The auxiliary contact can be:
  - An outdoor temperature thermostat
  - An electricity tariff contact
  - A manually operated contact
  - ...
- Setup: Connect the following field wiring:

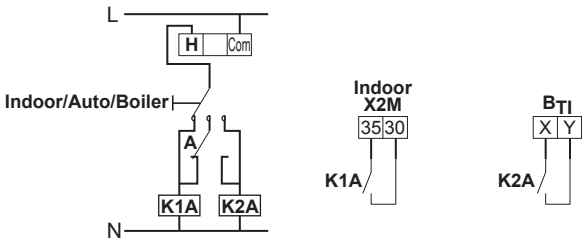

B_{TI}	Boiler thermostat input
A	Auxiliary contact (normally closed)
H	Heating demand room thermostat (optional)
K1A	Auxiliary relay for activation of indoor unit (field supply)
K2A	Auxiliary relay for activation of boiler (field supply)
Indoor	Indoor unit
Auto	Automatic
Boiler	Boiler

6.4 Setting up the domestic hot water tank

6.4.1 System layout – Standalone DHW tank

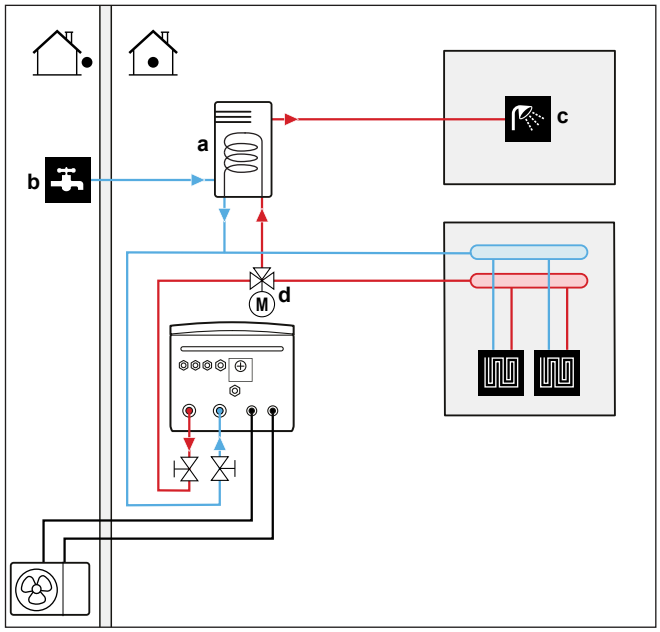

A	Domestic hot water
a	Cold water IN
b	Hot water OUT

6.4.2 Selecting the volume and desired temperature for the DHW tank

People experience water as hot when its temperature is 40°C. Therefore, the DHW consumption is always expressed as equivalent hot water volume at 40°C. However, you can set the DHW tank temperature at a higher temperature (example: 53°C), which is then mixed with cold water (example: 15°C).

Selecting the volume and desired temperature for the DHW tank consists of:

1 Determining the DHW consumption (equivalent hot water volume at 40°C).

2 Determining the volume and desired temperature for the DHW tank.

Determining the DHW consumption

Answer the following questions and calculate the DHW consumption (equivalent hot water volume at 40°C) using typical water volumes:

Question	Typical water volume
How many showers are needed per day?	1 shower = 10 min×10 l/min = 100 l
How many baths are needed per day?	1 bath = 150 l
How much water is needed at the kitchen sink per day?	1 sink = 2 min×5 l/min = 10 l
Are there any other domestic hot water needs?	—

Example: If the DHW consumption of a family (4 persons) per day is as follows:

- 3 showers
- 1 bath
- 3 sink volumes

Then the DHW consumption = (3×100 l)+(1×150 l)+(3×10 l)=480 l

Determining the volume and desired temperature for the DHW tank

Formula	Example
$V_1=V_2\times(T_2-T_1)/(40-T_1)$	If: ▪ V_2=180 l ▪ T_2=54°C ▪ T_1=15°C Then V_1=280 l
$V_2=V_1\times(40-T_1)/(T_2-T_1)$	If: ▪ V_1=480 l ▪ T_2=54°C ▪ T_1=15°C Then V_2=307 l

V_1 DHW consumption (equivalent hot water volume at 40°C)
V_2 Required DHW tank volume if only heated once
T_2 DHW tank temperature
T_1 Cold water temperature

Possible DHW tank volumes

Type	Possible volumes
Standalone DHW tank	▪ 150 l ▪ 180 l ▪ 200 l ▪ 250 l ▪ 300 l (polypropylene tank is compatible with solar kit) ▪ 500 l (compatible with solar kit)

Energy saving tips

- If the DHW consumption differs from day to day, you can program a weekly schedule with different desired DHW tank temperatures for each day.
- The lower the desired DHW tank temperature, the more cost effective. By selecting a larger DHW tank, you can lower the desired DHW tank temperature.

- The heat pump itself can produce domestic hot water of maximum 55°C (50°C if outdoor temperature is low). The electrical resistance integrated in the heat pump can increase this temperature. However, this consumes more energy. We recommend to set the desired DHW tank temperature below 55°C to avoid using the electrical resistance.
- The higher the outdoor temperature, the better the performance of the heat pump.
  - If energy prices are the same during the day and the night, we recommend to heat up the DHW tank during the day.
  - If energy prices are lower during the night, we recommend to heat up the DHW tank during the night.
- When the heat pump produces domestic hot water, depending on total heating demand and the scheduled priority setting, it might not be able to heat up a space. In case you need domestic hot water and space heating at the same time, we recommend to produce the domestic hot water during the night when there is lower space heating demand or during the time when occupants are not present.

6.4.3 Setup and configuration – DHW tank

- For large DHW consumptions, you can heat up the DHW tank several times during the day.
- To heat up the DHW tank to the desired DHW tank temperature, you can use the following energy sources:
  - Thermodynamic cycle of the heat pump
  - Electrical booster heater
- For more information about:
  - Optimizing the energy consumption for producing domestic hot water, see "10 Configuration" [▸ 135].
  - Connecting the electrical wiring of the standalone DHW tank to the indoor unit, see the installation manual of the DHW tank, and the addendum book for optional equipment.
  - Connecting the water piping of the standalone DHW tank to the indoor unit, see the installation manual of the DHW tank.

6.4.4 DHW pump for instant hot water

Setup

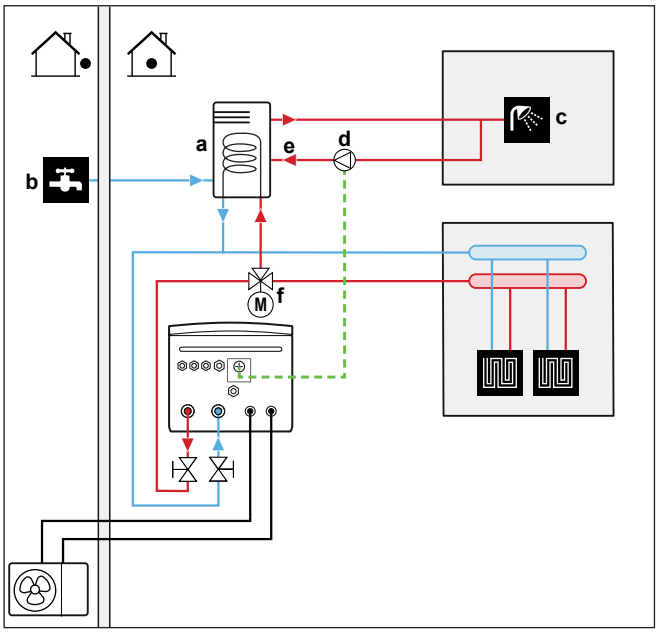

a DHW tank
b Cold water IN
c Hot water OUT (shower (field supply))
d DHW pump (field supply)
e Recirculation connection
f Motorised 3-way valve (field supply)

- By connecting a DHW pump, instant hot water can be available at the tap.
- The DHW pump and the installation are field supply and the responsibility of the installer. For the electrical wiring, see "9.3.5 To connect the domestic hot water pump" [▸ 123].
- For more information about connecting the recirculation connection, see the installation manual of the domestic hot water tank.

Configuration

- For more information, see "10 Configuration" [▸ 135].
- You can program a schedule to control the DHW pump via the user interface. For more information, see the user reference guide.

6.4.5 DHW pump for disinfection

INFORMATION

Restriction: Only applicable in case of stainless steel tanks (EKHWS*D*).

Setup

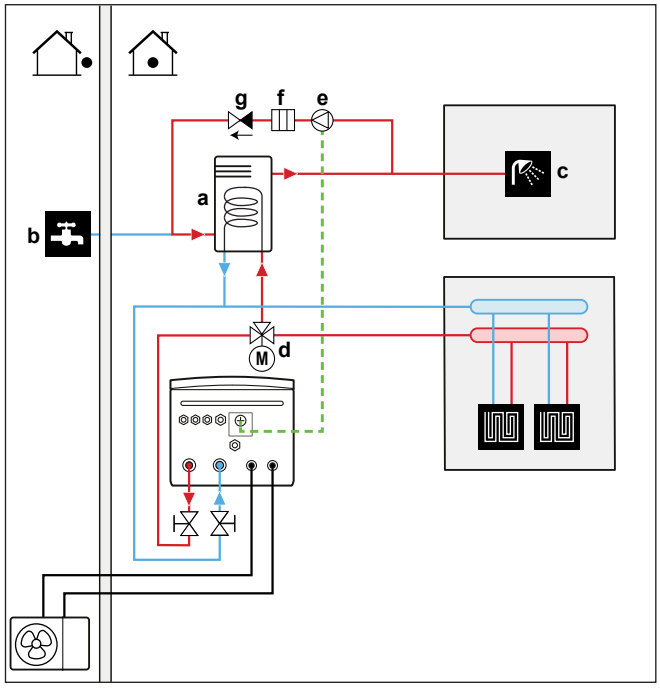

a DHW tank
b Cold water IN
c Hot water OUT (shower (field supply))
d Motorised 3-way valve (field supply)
e DHW pump (field supply)
f Heater element (field supply)
g Non-return valve (field supply)

- The DHW pump and the installation are field supply and the responsibility of the installer. For the electrical wiring, see "9.3.5 To connect the domestic hot water pump" [▸ 123].
- If the applicable legislation requires a higher temperature than the maximum tank setpoint during disinfection (see [2-03] in the field settings table), you can connect a DHW pump and heater element as shown above.
- If applicable legislation requires disinfection of the water piping until the tapping point, you can connect a DHW pump and heater element (if needed) as shown above.

Configuration

The indoor unit can control DHW pump operation. For more information, see "10 Configuration" [▸ 135].

6.4.6 DHW pump for tank preheating

INFORMATION

Restriction: Only applicable in case of stainless steel tanks (EKHWS*D*).

Setup

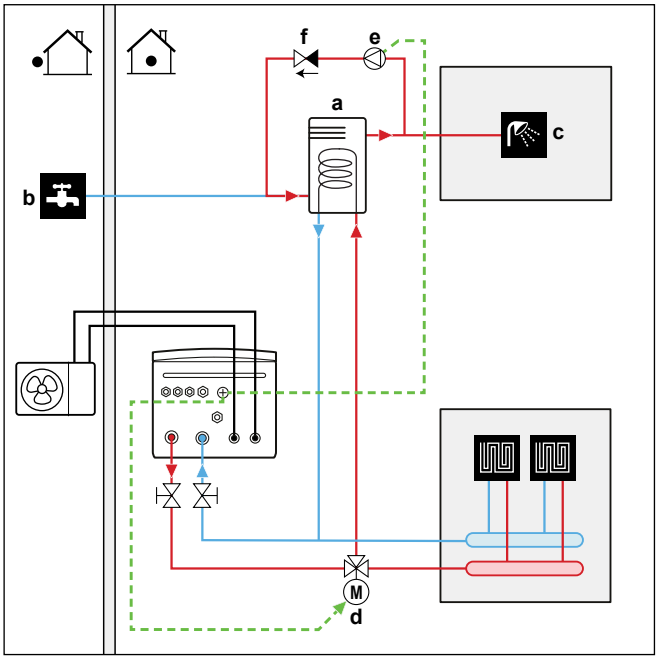

a DHW tank
b Cold water IN
c Hot water OUT (shower (field supply))
d Motorised 3-way valve (field supply)
e DHW pump (field supply)
f Non-return valve (field supply)

- The DHW pump and the installation are field supply and the responsibility of the installer. For the electrical wiring, see "9.3.5 To connect the domestic hot water pump" [▸ 123].

Configuration

The indoor unit can control DHW pump operation. For more information, see "10 Configuration" [▸ 135].

6.5 Setting up the energy metering

- Via the user interface, you can read out the following energy data:
  - Produced heat
  - Consumed energy
- You can read out the energy data:
  - For space heating
  - For space cooling
  - For domestic hot water production
- You can read out the energy data:
  - Per two hours (for the last 48 hours)
  - Per day (for the last 14 days)
  - Per month (for the last 24 months)
  - Total since installation

INFORMATION

The calculated produced heat and consumed energy are an estimation, the accuracy cannot be guaranteed.

6.5.1 Produced heat

INFORMATION

The sensors used to calculate the produced heat are calibrated automatically.

- The produced heat is calculated internally based on:
  - The leaving and entering water temperature
  - The flow rate
  - The power consumption of the booster heater (if applicable) in the domestic hot water tank
- Setup and configuration:
  - No additional equipment needed.
  - Only in case a booster heater is present in the system, measure its capacity (resistance measurement) and set the capacity via the user interface. **Example:** If you measure a booster heater resistance of 17.1Ω, the capacity of the heater at 230 V is 3100 W.

6.5.2 Consumed energy

You can use the following methods to determine the consumed energy:

- Calculating
- Measuring

INFORMATION

You cannot combine calculating the consumed energy (example: for backup heater) and measuring the consumed energy (example: for outdoor unit). If you do so, the energy data will be invalid.

Calculating the consumed energy

- The consumed energy is calculated internally based on:
  - The actual power input of the outdoor unit
  - The set capacity of the backup heater and booster heater (if applicable)
  - The voltage
- Setup and configuration: To get accurate energy data, measure the capacity (resistance measurement) and set the capacity via the user interface for:
  - The backup heater (step 1 and step 2) (if applicable)
  - The booster heater

Measuring the consumed energy

- Preferred method because of higher accuracy.
- Requires external power meters.
- Setup and configuration: When using electrical power meters, set the number of pulses/kWh for each power meter via the user interface.

INFORMATION

When measuring the electrical power consumption, make sure ALL power input of the system is covered by the electrical power meters.

6.5.3 Normal kWh rate power supply

General rule

One power meter that covers the entire system is sufficient.

Setup

Connect the power meter to X5M/5 and X5M/6. See "9.3.4 To connect the electricity meters" [▶ 122].

Power meter type

In case of...	Use a... power meter
▪ Single-phase outdoor unit ▪ Backup heater supplied from a single-phase grid, i.e. the backup heater model is: - *6V (6V3: 1N~ 230 V).	Single-phase
▪ Three-phase outdoor unit ▪ Backup heater supplied from a three-phase grid, i.e. the backup heater model is: - *6V (6T1: 3~ 230 V) - *9W (3N~ 400 V)	Three-phase

Example

Single-phase power meter	Three-phase power meter
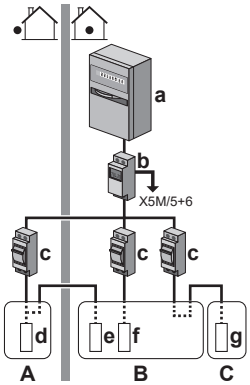	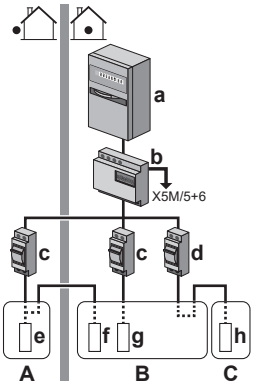
A Outdoor unit	**A** Outdoor unit
B Indoor unit	**B** Indoor unit
C DHW tank	**C** DHW tank
a Electrical cabinet (L_1/N)	**a** Electrical cabinet (L_1/L_2/L_3/N)
b Power meter (L_1/N)	**b** Power meter (L_1/L_2/L_3/N)
c Fuse (L_1/N)	**c** Fuse (L_1/L_2/L_3/N)
d Outdoor unit (L_1/N)	**d** Fuse (L_1/N)
e Indoor unit (L_1/N)	**e** Outdoor unit (L_1/L_2/L_3/N)
f Backup heater (L_1/N)	**f** Indoor unit (L_1/N)
g Booster heater (L_1/N)	**g** Backup heater (L_1/L_2/L_3/N)
	h Booster heater (L_1/N)

Exception

- You can use a second power meter if:
  - The power range of one meter is insufficient.
  - The electrical meter cannot easily be installed in the electrical cabinet.
  - 230 V and 400 V three-phase grids are combined (very uncommon), because of technical limitations of power meters.
- Connection and setup:
  - Connect the second power meter to X5M/3 and X5M/4. See "9.3.4 To connect the electricity meters" [▸ 122].
  - In the software the power consumption data of both meters is added so you do NOT have to set which meter covers which power consumption. You only need to set the number of pulses of each power meter.
- See "6.5.4 Preferential kWh rate power supply" [▸ 55] for an example with two power meters.

6.5.4 Preferential kWh rate power supply

General rule

- Power meter 1: Measures the outdoor unit.
- Power meter 2: Measures the rest (i.e. indoor unit, backup heater and optional booster heater).

Setup

- Connect power meter 1 to X5M/5 and X5M/6.
- Connect power meter 2 to X5M/3 and X5M/4.

See "9.3.4 To connect the electricity meters" [▸ 122].

Power meter types

- Power meter 1: Single- or three-phase power meter according to the power supply of the outdoor unit.
- Power meter 2:
  - In case of a single-phase backup heater configuration, use a single-phase power meter.
  - In other cases, use a three-phase power meter.

Example

Single-phase outdoor unit with a three-phase backup heater:

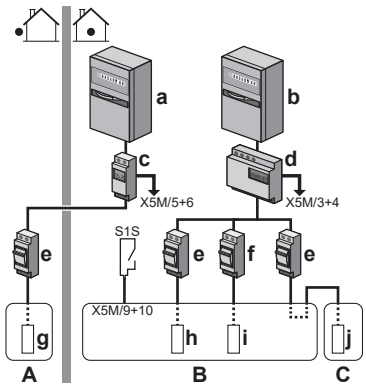

A Outdoor unit
B Indoor unit
C DHW tank
a Electrical cabinet (L_1/N): Preferential kWh rate power supply
b Electrical cabinet (L_1/L_2/L_3/N): Normal kWh rate power supply
c Power meter (L_1/N)
d Power meter (L_1/L_2/L_3/N)
e Fuse (L_1/N)
f Fuse (L_1/L_2/L_3/N)
g Outdoor unit (L_1/N)
h Indoor unit (L_1/N)
i Backup heater (L_1/L_2/L_3/N)
j Booster heater (L_1/N)
S1S Preferential kWh rate power supply contact

6.6 Setting up the power consumption control

You can use the following power consumption controls. For more information about the corresponding settings, see "Power consumption control" [▸ 215].

#	Power consumption control
1	"6.6.1 Permanent power limitation" [▸ 57] ▪ Allows you to limit the power consumption of the entire heat pump system (sum of indoor unit and backup heater) with one permanent setting. ▪ Limitation of power in kW or current in A.

#	Power consumption control
2	"6.6.2 Power limitation activated by digital inputs" [▸ 57] ▪ Allows you to limit the power consumption of the entire heat pump system (sum of indoor unit and backup heater) via 4 digital inputs. ▪ Limitation of power in kW or current in A.
3	"6.6.4 BBR16 power limitation" [▸ 59] ▪ **Restriction:** Only available in Swedish language. ▪ Allows you to comply with BBR16 regulations (Swedish energy regulations). ▪ Limitation of power in kW. ▪ Can be combined with the other kW power consumption controls. If you do so, the unit uses the most restrictive control.

NOTICE

It is possible to install a field fuse with lower than recommended rating over the heat pump. For this you must modify field setting [2-0E] according to the maximum allowed current over the heat pump.

Note that field setting [2-0E] overrules all power consumption control settings. Power limiting the heat pump will reduce performance.

6.6.1 Permanent power limitation

Permanent power limitation is useful to assure a maximum power or current input of the system. In some countries, legislation limits the maximum power consumption for space heating and DHW production.

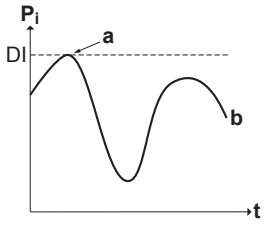

P_i Power input
t Time
DI Digital input (power limitation level)
a Power limitation active
b Actual power input

Setup and configuration

- No additional equipment needed.
- Set the power consumption control settings in [9.9] via the user interface (see "Power consumption control" [▸ 215]):
  - Select continuous limitation mode
  - Select the type of limitation (power in kW or current in A)
  - Set the desired power limitation level

6.6.2 Power limitation activated by digital inputs

Power limitation is also useful in combination with an energy management system.

The power or current of the entire Daikin system is limited dynamically by digital inputs (maximum four steps). Each power limitation level is set via the user interface by limiting one of the following:

- Current (in A)
- Power input (in kW)

The energy management system (field supply) decides the activation of a certain power limitation level. **Example:** To limit the maximum power of the entire house (lighting, domestic appliances, space heating...).

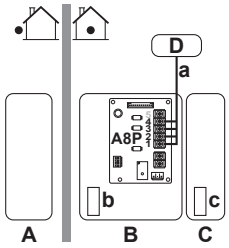

A Outdoor unit
B Indoor unit
C DHW tank
D Energy management system
a Power limitation activation (4 digital inputs)
b Backup heater
c Booster heater

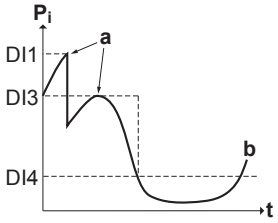

P_i Power input
t Time
DI Digital inputs (power limitation levels)
a Power limitation active
b Actual power input

Setup

- Demand PCB (option EKRP1AHTA) needed.
- Maximum four digital inputs are used to activate the corresponding power limitation level:
  - DI1 = strongest limitation (lowest energy consumption)
  - DI4 = weakest limitation (highest energy consumption)
- Specification of the digital inputs:
  - DI1: S9S (limit 1)
  - DI2: S8S (limit 2)
  - DI3: S7S (limit 3)
  - DI4: S6S (limit 4)
- Refer to the wiring diagram for more information.

Configuration

- Set the power consumption control settings in [9.9] via the user interface (for the description of all settings, see "Power consumption control" [▸ 215]):
  - Select limitation by digital inputs.
  - Select the type of limitation (power in kW or current in A).
  - Set the desired power limitation level corresponding to each digital input.

INFORMATION

In case more than 1 digital input is closed (at the same time), the digital input priority is fixed: DI4 priority>...>DI1.

6.6.3 Power limitation process

The outdoor unit has better efficiency than the electrical heaters. Therefore, the electrical heaters are limited and turned OFF first. The system limits power consumption in the following order:

1 Limits certain electrical heaters.

If... has priority	Then set the priority heater via the user interface to...
Domestic hot water production	`Booster heater` (if applicable) **Result:** The backup heater will be turned OFF first.
Space heating	`Backup heater` **Result:** The booster heater (if applicable) will be turned OFF first.

2 Turns OFF all electrical heaters.

3 Limits the outdoor unit.

4 Turns OFF the outdoor unit.

Example

If the configuration is as follows:

- Power limitation level does NOT allow operation of both booster heater and backup heater (step 1 and step 2).
- Priority heater = `Booster heater` (if applicable).

Then power consumption is limited as follows:

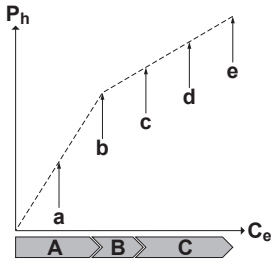

P_h Produced heat
C_e Consumed energy
A Outdoor unit
B Booster heater
C Backup heater
a Limited outdoor unit operation
b Full outdoor unit operation
c Booster heater turned ON
d Backup heater step 1 turned ON
e Backup heater step 2 turned ON

6.6.4 BBR16 power limitation

INFORMATION

Restriction: BBR16 settings are only visible when the language of the user interface is set to Swedish.

NOTICE

2 weeks to change. After you activated BBR16, you only have 2 weeks to change its settings (`BBR16 activation` and `BBR16 power limit`). After 2 weeks, the unit freezes these settings.

Note: This is different from the permanent power limitation, which is always changeable.

Use the BBR16 power limitation when you must comply with BBR16 regulations (Swedish energy regulations).

You can combine the BBR16 power limitation with the other kW power consumption controls. If you do so, the unit uses the most restrictive control.

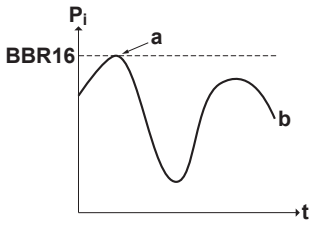

P_i	Power input
t	Time
BBR16	BBR16 limit level
a	Power limitation active
b	Actual power input

Setup and configuration

- No additional equipment needed.
- Set the power consumption control settings in [9.9] via the user interface (see "Power consumption control" [▸ 215]):
  - Activate BBR16
  - Set the desired power limitation level

6.7 Setting up an external temperature sensor

You can connect one external temperature sensor. It measures the indoor or outdoor ambient temperature. We recommend to use an external temperature sensor in the following cases:

Indoor ambient temperature

- In room thermostat control, the dedicated Human Comfort Interface (BRC1HHDA used as room thermostat) measures the indoor ambient temperature. Therefore, the Human Comfort Interface must be installed on a location:
  - Where the average temperature in the room can be detected
  - That is NOT exposed to direct sunlight
  - That is NOT near a heat source
  - That is NOT affected by outside air or air draught because of, for example, door opening/closing
- If this is NOT possible, we recommend to connect a remote indoor sensor (option KRCS01-1).
- Setup: For installation instructions, see the installation manual of the remote indoor sensor, and the addendum book for optional equipment.
- Configuration: Select room sensor [9.B].

Outdoor ambient temperature

- In the outdoor unit, the outdoor ambient temperature is measured. Therefore, the outdoor unit must be installed on a location:
  - At the north side of the house or at the side of the house where the most heat emitters are located
  - That is NOT exposed to direct sunlight
- If this is NOT possible, we recommend to connect a remote outdoor sensor (option EKRSCA1).
- Setup: For installation instructions, see the installation manual of the remote outdoor sensor, and the addendum book for optional equipment.
- Configuration: Select outdoor sensor [9.B].
- When the power saving functionality of the outdoor unit is active, the outdoor unit is turned down to reduce standby energy losses. As a result, the outdoor ambient temperature is NOT read out.
- If the desired leaving water temperature is weather dependent, the full time outdoor temperature measurement is important. This is another reason to install the optional outdoor ambient temperature sensor.

INFORMATION

The external outdoor ambient sensor data (either averaged or instantaneous) is used in the weather-dependent control curves and in the automatic heating/cooling changeover logic. To protect the outdoor unit, the internal sensor of the outdoor unit is always used.

7 Unit installation

In this chapter

7.1 Preparing the installation site ... 62
7.1.1 Installation site requirements of the outdoor unit ... 62
7.1.2 Additional installation site requirements of the outdoor unit in cold climates ... 65
7.1.3 Installation site requirements of the indoor unit ... 65
7.1.4 Special requirements for R32 units ... 66
7.1.5 Installation patterns ... 67
7.2 Opening and closing the units ... 71
7.2.1 About opening the units ... 71
7.2.2 To open the outdoor unit ... 71
7.2.3 To close the outdoor unit ... 72
7.2.4 To open the indoor unit ... 72
7.2.5 To close the indoor unit ... 74
7.3 Mounting the outdoor unit ... 74
7.3.1 About mounting the outdoor unit ... 74
7.3.2 Precautions when mounting the outdoor unit ... 74
7.3.3 To provide the installation structure ... 75
7.3.4 To install the outdoor unit ... 77
7.3.5 To provide drainage ... 78
7.3.6 To prevent the outdoor unit from falling over ... 80
7.4 Mounting the indoor unit ... 81
7.4.1 About mounting the indoor unit ... 81
7.4.2 Precautions when mounting the indoor unit ... 81
7.4.3 To install the indoor unit ... 81
7.4.4 To connect the drain hose to the drain ... 82

7.1 Preparing the installation site

WARNING

The appliance shall be stored in a room without continuously operating ignition sources (example: open flames, an operating gas appliance or an operating electric heater).

Choose an installation location with sufficient space to transport the unit in and out of the site.

Do NOT install the unit in places often used as work place. In case of construction works (e.g. grinding works) where a lot of dust is created, the unit MUST be covered.

WARNING

DO NOT reuse refrigerant piping that has been used with any other refrigerant. Replace the refrigerant pipes or clean thoroughly.

7.1.1 Installation site requirements of the outdoor unit

INFORMATION

Also read the following requirements:

- General installation site requirements. See the "General safety precautions" chapter.
- Refrigerant piping requirements (length, height difference). See further in this "Preparation" chapter.

Mind the following spacing guidelines:

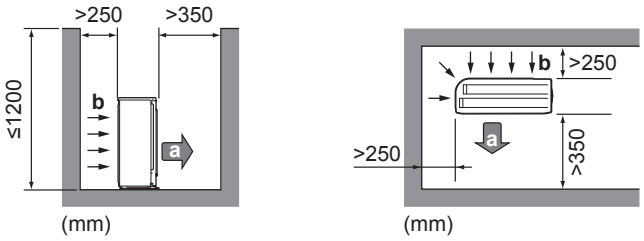

a Air outlet
b Air inlet

INFORMATION

In sound sensitive areas (e.g. near a bedroom), you can install the low sound cover (EKLN08A1) to decrease the operation noise of the outdoor unit. If you install it, mind the following spacing guidelines:

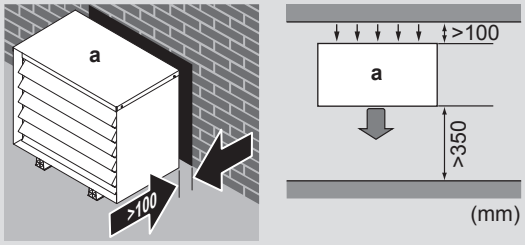

a Low sound cover

NOTICE

- Do NOT stack the units on each other.
- Do NOT hang the unit on a ceiling.

Strong winds (≥18 km/h) blowing against the outdoor unit's air outlet causes short circuit (suction of discharge air). This may result in:

- deterioration of the operational capacity;
- frequent frost acceleration in heating operation;
- disruption of operation due to decrease of low pressure or increase of high pressure;
- a broken fan (if a strong wind blows continuously on the fan, it may start rotating very fast, until it breaks).

It is recommended to install a baffle plate when the air outlet is exposed to wind.

It is recommended to install the outdoor unit with the air inlet facing the wall and NOT directly exposed to the wind.

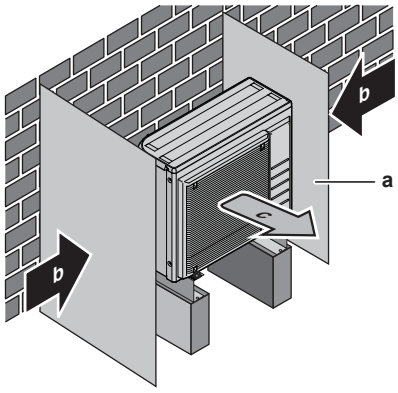

a Baffle plate
b Prevailing wind direction
c Air outlet

Do NOT install the unit in the following places:

- Sound sensitive areas (e.g. near a bedroom), so that the operation noise will cause no trouble.

  Note: If the sound is measured under actual installation conditions, the measured value might be higher than the sound pressure level mentioned in Sound spectrum in the data book due to environmental noise and sound reflections.

- In places where a mineral oil mist, spray or vapour may be present in the atmosphere. Plastic parts may deteriorate and fall off or cause water leakage.

It is NOT recommended to install the unit in the following places because it may shorten the life of the unit:

- Where the voltage fluctuates a lot
- In vehicles or vessels
- Where acidic or alkaline vapour is present

Seaside installation. Make sure the outdoor unit is NOT directly exposed to sea winds. This is to prevent corrosion caused by high levels of salt in the air, which might shorten the life of the unit.

Install the outdoor unit away from direct sea winds.

Example: Behind the building.

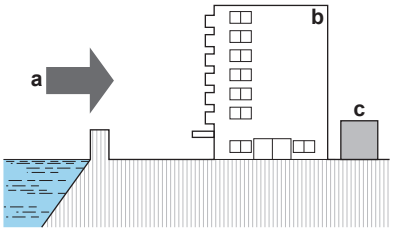

a Sea wind
b Building
c Outdoor unit

If the outdoor unit is exposed to direct sea winds, install a windbreaker.

- Height of windbreaker ≥1.5× height of outdoor unit
- Mind the service space requirements when installing the windbreaker.

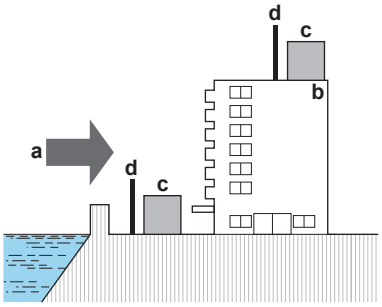

a Sea wind
b Building
c Outdoor unit
d Windbreaker

The outdoor unit is designed for outdoor installation only, and for the following ambient temperatures:

Cooling mode	10~43°C
Heating mode	–25~25°C

INFORMATION

The sound pressure level is less than 70 dBA.

7.1.2 Additional installation site requirements of the outdoor unit in cold climates

Protect the outdoor unit against direct snowfall and take care that the outdoor unit is NEVER snowed up.

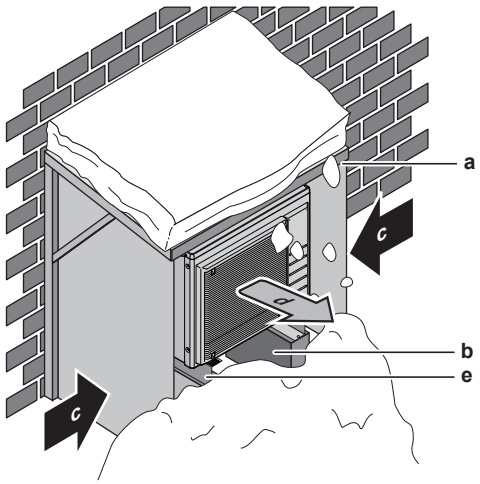

a Snow cover or shed
b Pedestal
c Prevailing wind direction
d Air outlet
e EKFT008D option kit

In any case, provide at least 300 mm of free space below the unit. Additionally, make sure the unit is positioned at least 100 mm above the maximum expected level of snow. See "7.3 Mounting the outdoor unit" [▸ 74] for more details.

In heavy snowfall areas it is very important to select an installation site where the snow will NOT affect the unit. If lateral snowfall is possible, make sure that the heat exchanger coil is NOT affected by the snow. If necessary, install a snow cover or shed and a pedestal.

7.1.3 Installation site requirements of the indoor unit

INFORMATION

Also read the precautions and requirements in the "2 General safety precautions" [▸ 10].

- The indoor unit is designed for indoor installation only and for the following ambient temperatures:
  - Space heating operation: 5~30°C
  - Space cooling operation: 5~35°C
  - Domestic hot water production: 5~35°C

INFORMATION

Cooling is only applicable in case of reversible models.

- Mind the measurement guidelines:

Maximum refrigerant piping length[(a)] between indoor unit and outdoor unit	30 m

Minimum refrigerant piping length[(a)] between indoor unit and outdoor unit	3 m
Maximum height difference between indoor unit and outdoor unit:	
When outdoor unit (ERGA06E▲V3H▼ or ERGA08E▲V3H▼) is at highest location	30 m
When outdoor unit (ERGA04E▲V3▼ or ERGA04~08E▲V3A▼) is at highest location	20 m
When indoor unit is at highest location	20 m
Maximum distance between the 3-way valve and the indoor unit (for installations with domestic hot water tank)	3 m
Maximum distance between the domestic hot water tank and the indoor unit (for installations with domestic hot water tank)	10 m

[(a)] Refrigerant piping length is the one-way length of liquid piping.

- Mind the following spacing installation guidelines:

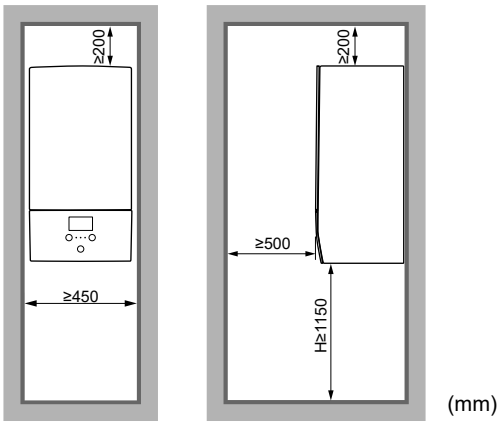

H Height measured from the bottom of the casing to the floor

Additionally to the spacing guidelines: The room where you install the indoor unit must also comply with the conditions described in "7.1.5 Installation patterns" [▸ 67].

Do NOT install the unit in places such as:

- In places where a mineral oil mist, spray or vapour may be present in the atmosphere. Plastic parts may deteriorate and fall off or cause water leakage.
- Sound sensitive areas (e.g. near a bedroom), so that the operation noise will cause no trouble.
- In places with high humidity (max. RH=85%), for example a bathroom.
- In places where frost is possible. Ambient temperature around the indoor unit must be >5°C.

7.1.4 Special requirements for R32 units

Additionally to the spacing guidelines: The room where you install the indoor unit must also comply with the conditions described in "7.1.5 Installation patterns" [▸ 67].

WARNING

- Do NOT pierce or burn refrigerant cycle parts.
- Do NOT use means to accelerate the defrosting process or to clean the equipment, other than those recommended by the manufacturer.
- Be aware that R32 refrigerant does NOT contain an odour.

WARNING

The appliance shall be stored so as to prevent mechanical damage and in a well-ventilated room without continuously operating ignition sources (example: open flames, an operating gas appliance or an operating electric heater) and have a room size as specified below.

NOTICE

- Do NOT re-use joints and copper gaskets which have been used already.
- Joints made in the installation between parts of the refrigerant system shall be accessible for maintenance purposes.

WARNING

Make sure installation, servicing, maintenance and repair comply with instructions from Daikin and with applicable legislation (for example national gas regulation) and are executed ONLY by authorised persons.

NOTICE

- The pipework shall be securely mounted and guarded protected from physical damage.
- Keep the pipework installation to a minimum.

7.1.5 Installation patterns

WARNING

For units using the R32 refrigerant it is necessary to keep any required ventilation openings clear of obstructions.

Depending on the total refrigerant charge in the system and the type of room in which you install the indoor unit, different installation patterns are allowed:

If...		Then...
Total refrigerant charge in the system	**Room type**	**Allowed patterns**
<1.84 kg (i.e. if the piping length is <27 m)	All	1 (2, 3 and 4 are superfluous. There is no need to check the minimum floor area or to provide ventilation openings.)
≥1.84 kg (i.e. if the piping length is ≥27 m)	Living room, kitchen, garage, attic, basement, storage room	2, 3
	Technical room (i.e. room that is NEVER occupied by persons)	2, 3, 4

	PATTERN 1	PATTERN 2	PATTERN 3	PATTERN 4
	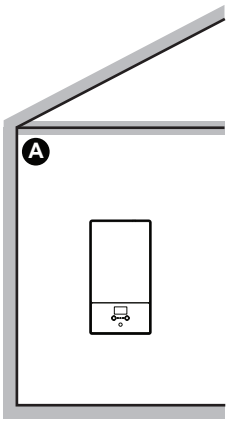	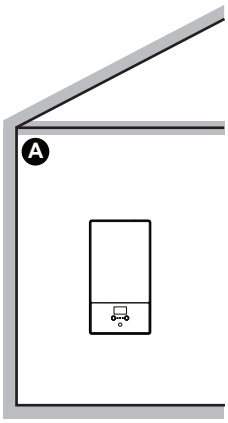	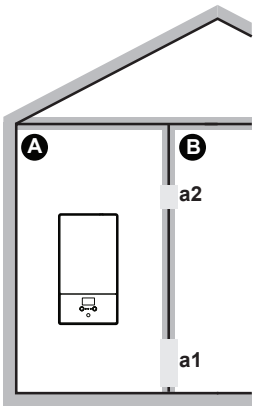	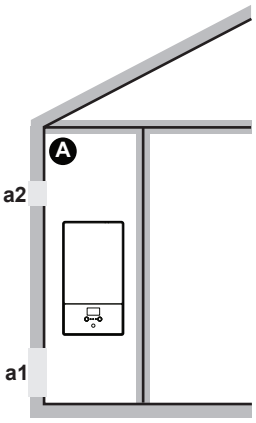
Ventilation openings	N/A	N/A	Between room A and B	Between room A and outside
Minimum floor area	N/A	Room A	Room A + Room B	N/A
Restrictions	See "PATTERN 1" [▸ 68]	See "PATTERN 2 and 3" [▸ 68]		See "PATTERN 4" [▸ 70]

Ⓐ	Room A (= room where indoor unit is installed)
Ⓑ	Room B (= adjacent room)
a1	Bottom opening for natural ventilation
a2	Top opening for natural ventilation

PATTERN 1

For PATTERN 1 you only need to comply with the spacing guidelines described in "7.1.3 Installation site requirements of the indoor unit" [▸ 65].

PATTERN 2 and 3

For PATTERN 2 and 3, additionally to the spacing guidelines described in "7.1.3 Installation site requirements of the indoor unit" [▸ 65], you also need to comply with the minimum floor area requirements as described in the following flow chart. The flow chart uses the following tables: "16.5 Table 1 – Maximum refrigerant charge allowed in a room: indoor unit" [▸ 273], "16.6 Table 2 – Minimum floor area: indoor unit" [▸ 273] and "16.7 Table 3 – Minimum bottom opening area for natural ventilation: indoor unit" [▸ 274].

INFORMATION

Multiple indoor units. If two or more indoor units are installed in a room, you must consider the maximum refrigerant charge that can be released in the room when a SINGLE leak occurs. **Example:** If two indoor units are installed in the room, each with its own outdoor unit, then you have to consider the refrigerant charge of the largest indoor-outdoor combination.

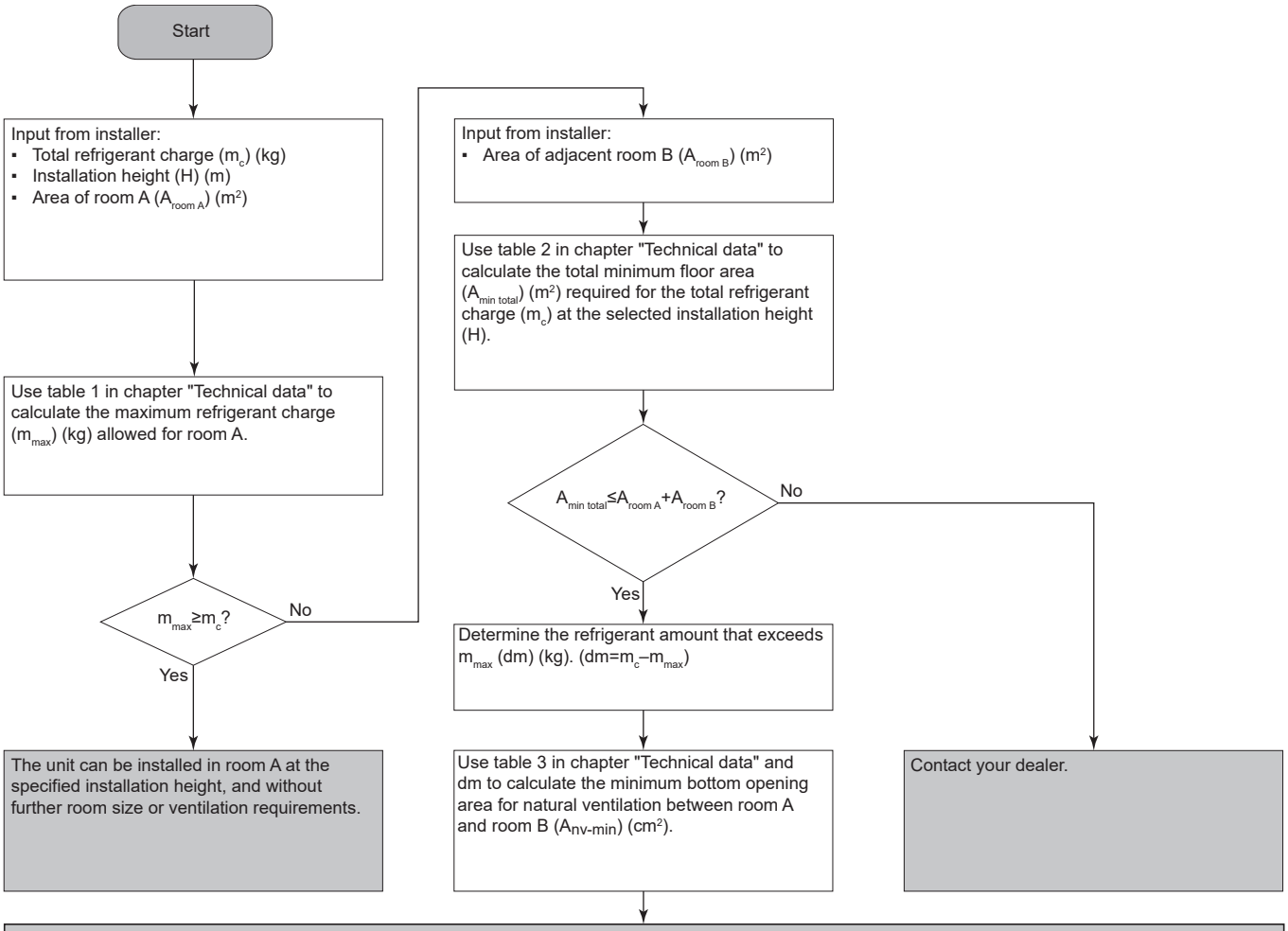

Unit can be installed in **room A** if you provide 2 openings (one at the bottom, one at the top) between room A and B to ensure natural ventilation. The openings must comply with the following conditions:

- **Bottom opening (A_{nv}):**
  - Must be a permanent opening that cannot be closed.
  - Must be completely located between 0 and 300 mm from the floor.
  - Must be $\geq A_{nv\text{-}min}$ (minimum bottom opening area).
  - ≥50% of the required opening area $A_{nv\text{-}min}$ must be ≤200 mm from the floor.
  - The bottom of the opening must be ≤100 mm from the floor.
  - If the opening starts from the floor, the height of the opening must be ≥20 mm.
- **Top opening:**
  - Must be a permanent opening that cannot be closed.
  - Must be ≥50% of $A_{nv\text{-}min}$ (minimum bottom opening area).
  - Must be ≥1.5 m from the floor.

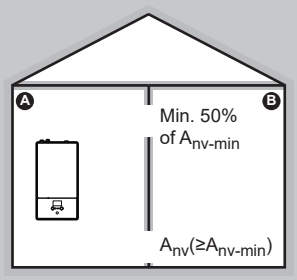

PATTERN 4

PATTERN 4 is only allowed for installations in technical rooms (i.e. room that is NEVER occupied by persons). For this pattern there are no requirements to the minimum floor area if you provide 2 openings (one at the bottom, one at the top) between the room and the outside to ensure natural ventilation. The room must be protected from frost.

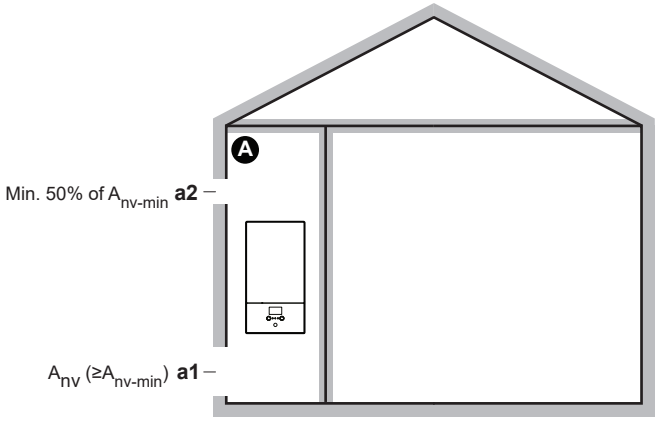

Ⓐ	Unoccupied room where the indoor unit is installed. Must be protected from frost.
a1	A_{nv}: **Bottom opening** for natural ventilation between the unoccupied room and the outside. ▪ Must be a permanent opening that cannot be closed. ▪ Must be above ground level. ▪ Must be completely located between 0 and 300 mm from the floor of the unoccupied room. ▪ Must be ≥$A_{nv\text{-}min}$ (minimum bottom opening area as specified in the table below). ▪ ≥50% of the required opening area $A_{nv\text{-}min}$ must be ≤200 mm from the floor of the unoccupied room. ▪ The bottom of the opening must be ≤100 mm from the floor of the unoccupied room. ▪ If the opening starts from the floor, the height of the opening must be ≥20 mm.
a2	**Top opening** for natural ventilation between room A and the outside. ▪ Must be a permanent opening that cannot be closed. ▪ Must be ≥50% of $A_{nv\text{-}min}$ (minimum bottom opening area as specified in the table below). ▪ Must be ≥1.5 m from the floor of the unoccupied room.

$A_{nv\text{-}min}$ (minimum bottom opening area for natural ventilation)

The minimum bottom opening area for natural ventilation between the unoccupied room and the outside depends on the total refrigerant in the system. For intermediate refrigerant charges, use the row with the higher value. **Example:** If the refrigerant charge is 4.3 kg, use the row of 4.4 kg.

Total refrigerant charge (kg)	$A_{nv\text{-}min}$ (dm²)
2	7.2
2.2	7.5
2.4	7.8

Total refrigerant charge (kg)	$A_{nv\text{-}min}$ (dm²)
2.6	8.2
2.8	8.5
3	8.8
3.2	9.1
3.4	9.3
3.6	9.6
3.8	9.9
4	10.1
4.2	10.4
4.4	10.6
4.6	10.9
4.8	11.1
5	11.3
5.2	11.5
5.4	11.8
5.6	12.0
5.8	12.2

7.2 Opening and closing the units

7.2.1 About opening the units

At certain times, you have to open the unit. **Example:**

- When connecting the refrigerant piping
- When connecting the electrical wiring
- When maintaining or servicing the unit



DANGER: RISK OF ELECTROCUTION

Do NOT leave the unit unattended when the service cover is removed.

7.2.2 To open the outdoor unit



DANGER: RISK OF ELECTROCUTION



DANGER: RISK OF BURNING/SCALDING

See "8.2.8 To connect the refrigerant piping to the outdoor unit" [▸ 90] and "9.2.2 To connect the electrical wiring to the outdoor unit" [▸ 111].

7.2.3 To close the outdoor unit

1. Close the switch box cover.
2. Close the service cover.

> **NOTICE**
> When closing the outdoor unit cover, make sure that the tightening torque does NOT exceed 4.1 N•m.

7.2.4 To open the indoor unit

Overview

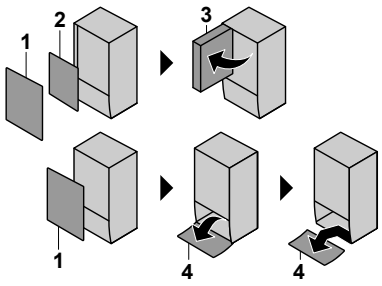

1. Front panel
2. Switch box cover
3. Switch box
4. User interface panel

Open

1. Remove the front panel.

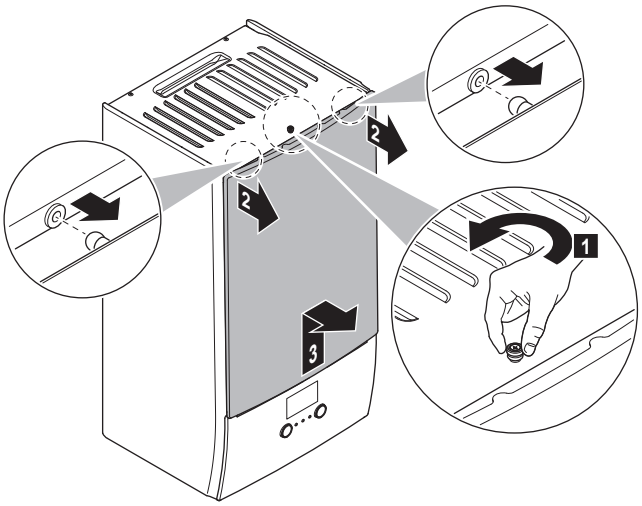

2 If you have to connect electrical wiring, remove the switch box cover.

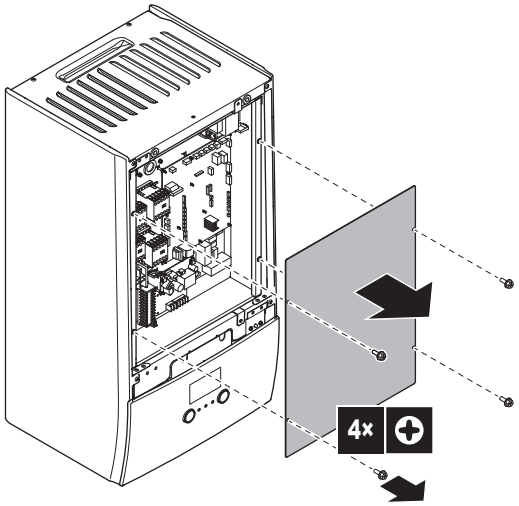

3 If you have to do work behind the switch box, open the switch box.

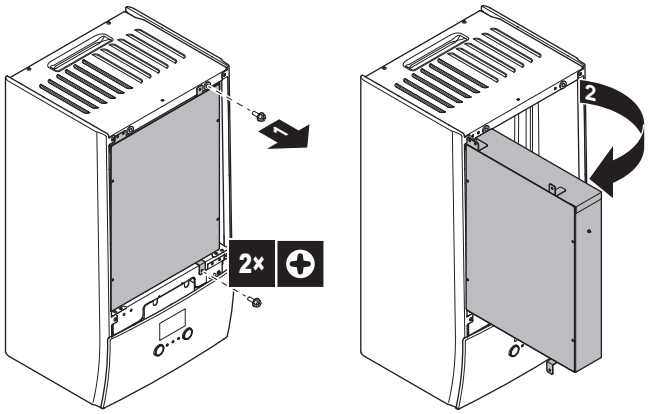

4 If you have to do work behind the user interface panel or upload new software into the user interface, open the user interface panel.

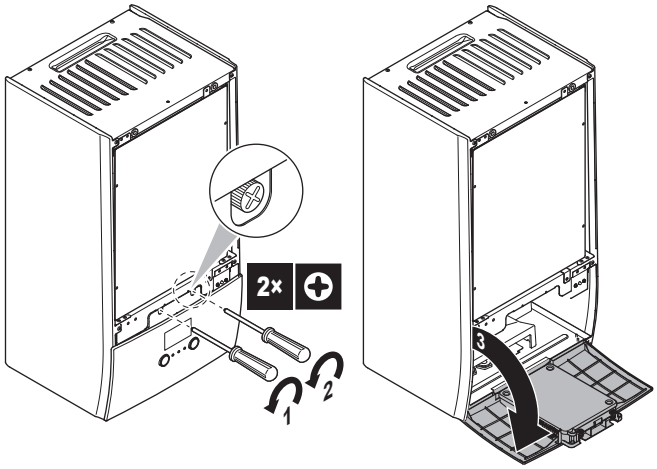

5 Optional: Remove the user interface panel.

NOTICE

If you remove the user interface panel, also disconnect the cables from the back of the user interface panel to prevent damage.

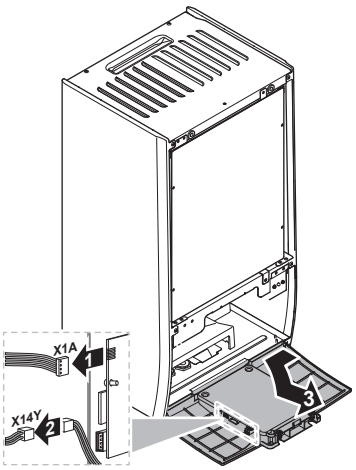

7.2.5 To close the indoor unit

1. Reinstall the user interface panel.
2. Reinstall the switch box cover and close the switch box.
3. Reinstall the front panel.

NOTICE

When closing the indoor unit cover, make sure that the tightening torque does NOT exceed 4.1 N•m.

7.3 Mounting the outdoor unit

7.3.1 About mounting the outdoor unit

When

You have to mount the outdoor and indoor unit before you can connect the refrigerant and water piping.

Typical workflow

Mounting the outdoor unit typically consists of the following stages:

1. Providing the installation structure.
2. Installing the outdoor unit.
3. Providing drainage.
4. Preventing the unit from falling over.
5. Protecting the unit against snow and wind by installing a snow cover and baffle plates. See "7.1 Preparing the installation site" [▸ 62].

7.3.2 Precautions when mounting the outdoor unit

INFORMATION

Also read the precautions and requirements in the following chapters:

- "2 General safety precautions" [▸ 10]
- "7.1 Preparing the installation site" [▸ 62]

7.3.3 To provide the installation structure

Check the strength and level of the installation ground so that the unit will not cause any operating vibration or noise.

Fix the unit securely by means of foundation bolts in accordance with the foundation drawing.

This topic shows different installation structures. For all, use 4 sets of M8 or M10 anchor bolts, nuts and washers. In any case, provide at least 300 mm of free space below the unit. Additionally, make sure the unit is positioned at least 100 mm above the maximum expected level of snow.

INFORMATION

The maximum height of the upper protruding part of the bolts is 15 mm.

INFORMATION

If you install the U-beams in combination with the low sound cover (EKLN08A1), different installation instructions apply for the U-beams. See the installation manual of the low sound cover.

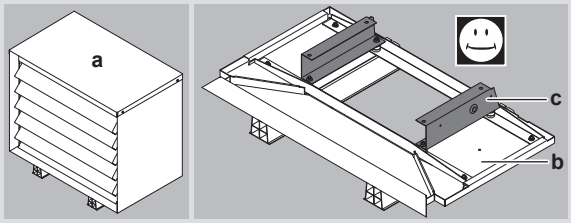

a Low sound cover

b Bottom parts of the low sound cover

c U-beams

Option 1: On mounting feet "flexi-foot with strut"

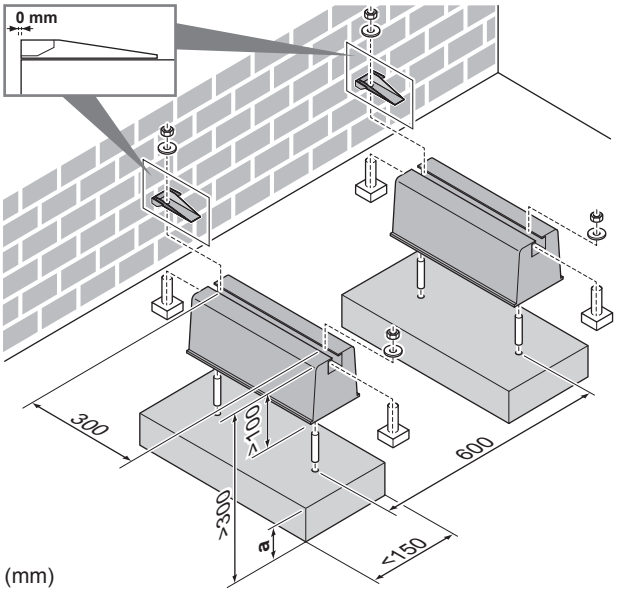

a Maximum snowfall height

Option 2: On plastic mounting feet

In this case, you can use the bolts, nuts, washers and spring washers delivered with the unit as accessories.

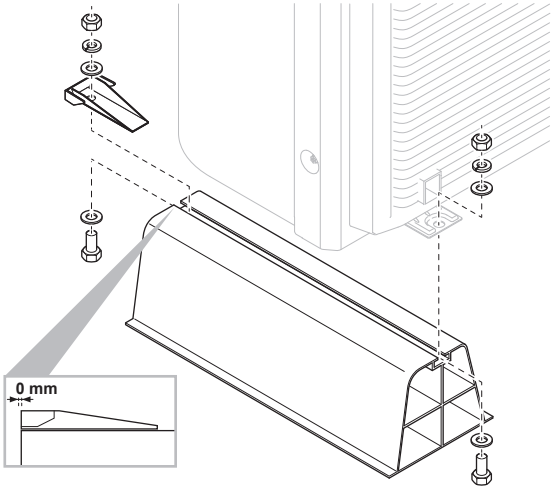

Option 3: On a pedestal with the EKFT008D option kit

The EKFT008D option kit is recommended in areas with heavy snowfall.

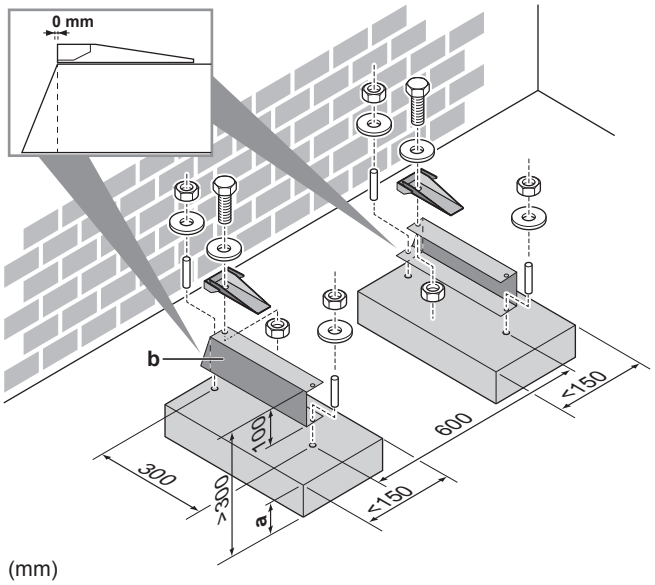

(mm)

a Maximum snowfall height
b EKFT008D option kit

Option 4: On brackets to the wall with the EKFT008D option kit

The EKFT008D option kit is recommended in areas with heavy snowfall.

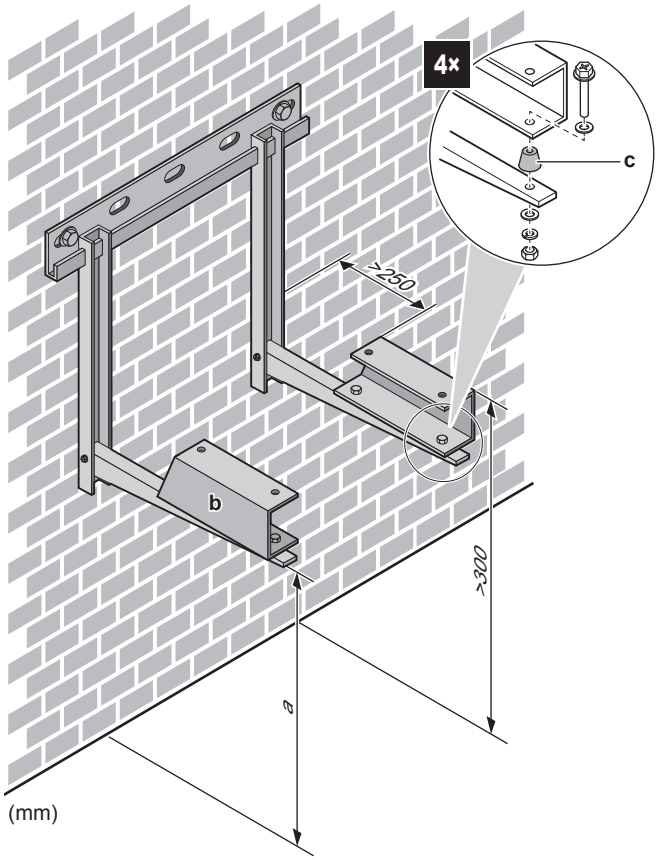

a Maximum snowfall height
b EKFT008D option kit
c Anti-vibration rubber (field supply)

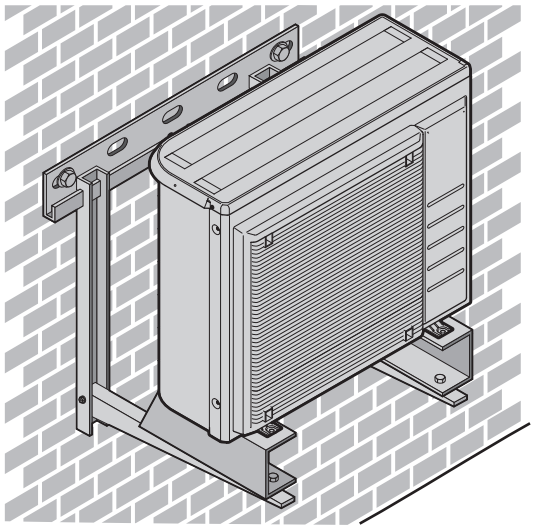

7.3.4 To install the outdoor unit

CAUTION
Do NOT remove the protective cardboard before the unit is installed properly.

1 Lift the outdoor unit as described in "4.1.2 To handle the outdoor unit" [▸ 22].

2 Install the outdoor unit as follows:

- (1) Put the unit into position (using the sling to the left and the handle to the right).
- (2) Remove the sling (by pulling 1 side of the sling).
- (3) Fix the unit.

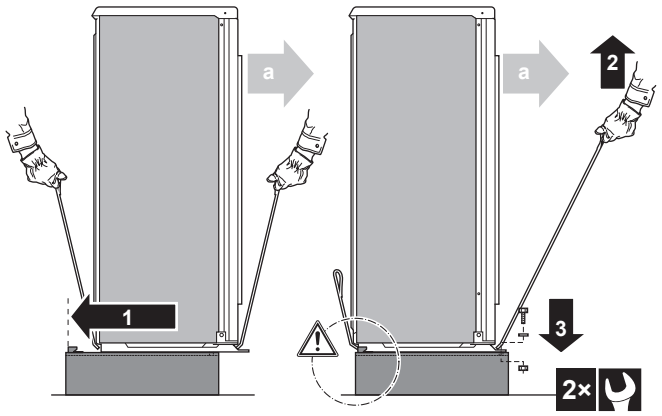

a Air outlet

NOTICE

Properly align the unit. Make sure the backside of the unit does NOT protrude.

3 Remove the protective cardboard and instruction sheet.

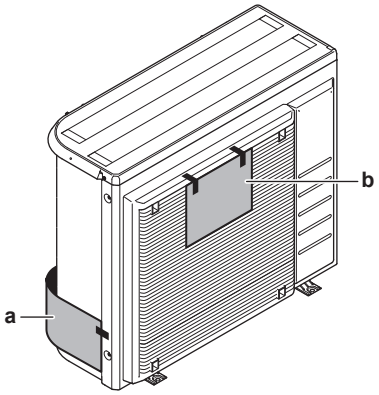

a Protective cardboard
b Instruction sheet

7.3.5 To provide drainage

- Make sure that condensation water can be evacuated properly.
- Install the unit on a base to make sure that there is proper drainage in order to avoid ice accumulation.
- Prepare a water drainage channel around the foundation to drain waste water away from the unit.
- Avoid drain water flowing over the footpath, so that it does NOT become slippery in case of ambient freezing temperatures.
- If you install the unit on a frame, install a waterproof plate within 150 mm of the bottom side of the unit in order to prevent water from getting into the unit and to avoid drain water dripping (see the following figure).



NOTICE

If the drain holes of the outdoor unit are blocked up, provide space of at least 300 mm below the outdoor unit.

- **Drain pan.** You can use the drain pan option (EKDP008D) to gather the drain water. For the complete installation instructions, see the installation manual of the drain pan. In short, the drain pan must be installed level (with a tolerance of 1° at all sides) and as follows:

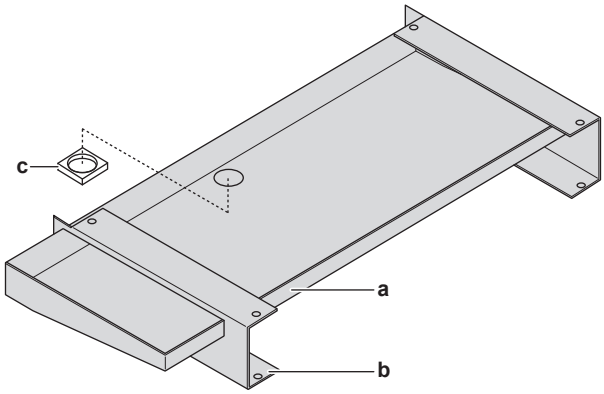

a Drain pan
b U-beams
c Drain hole insulation

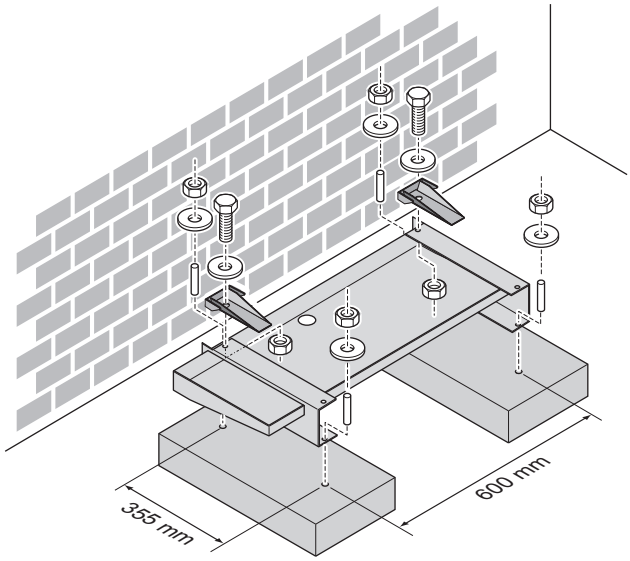

- **Drain pan heater.** You can use the drain pan heater option (EKDPH008CA) to prevent freezing-up of the drain pan. For the installation instructions, see the installation manual of the drain pan heater.
- **Non-heated drain tube.** When using the drain pan heater without drain tube or with a non-heated drain tube, remove the drain hole insulation (Item c on the illustration).

INFORMATION

If you install the drain pan kit (with or without drain pan heater) in combination with the low sound cover (EKLN08A1), different installation instructions apply for the drain pan kit. See the installation manual of the low sound cover.

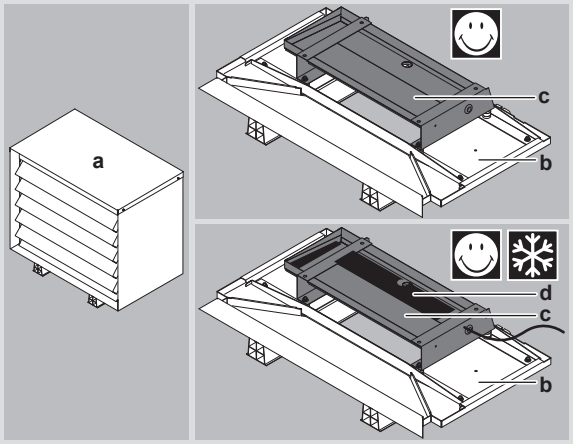

a Low sound cover

b Bottom parts of the low sound cover

c Drain pan kit

d Drain pan heater

7.3.6 To prevent the outdoor unit from falling over

In case the unit is installed in places where strong wind can tilt the unit, take following measure:

1. Prepare 2 cables as indicated in the following illustration (field supply).
2. Place the 2 cables over the outdoor unit.
3. Insert a rubber sheet between the cables and the outdoor unit to prevent the cables from scratching the paint (field supply).
4. Attach the ends of the cables.
5. Tighten the cables.

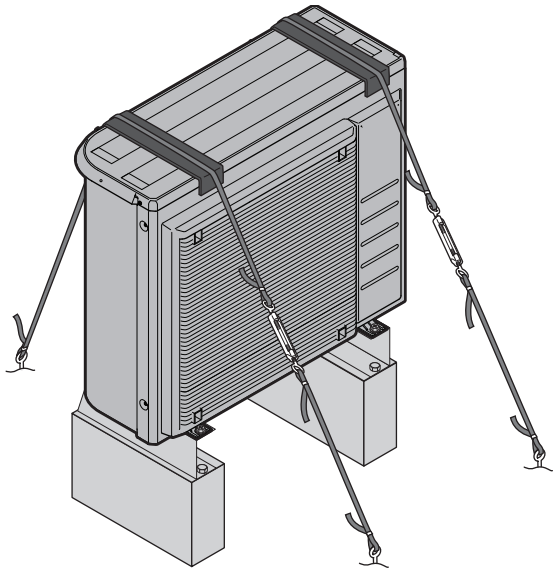

7.4 Mounting the indoor unit

7.4.1 About mounting the indoor unit

When

You have to mount the outdoor and indoor unit before you can connect the refrigerant and water piping.

Typical workflow

Mounting the indoor unit typically consists of the following stages:

1 Installing the indoor unit.
2 Connecting the drain hose to the drain.

7.4.2 Precautions when mounting the indoor unit

INFORMATION

Also read the precautions and requirements in the following chapters:

- "2 General safety precautions" [▸ 10]
- "7.1 Preparing the installation site" [▸ 62]

7.4.3 To install the indoor unit

1 Fix the wall bracket (accessory) to the wall (level) with 2× Ø8 mm bolts.

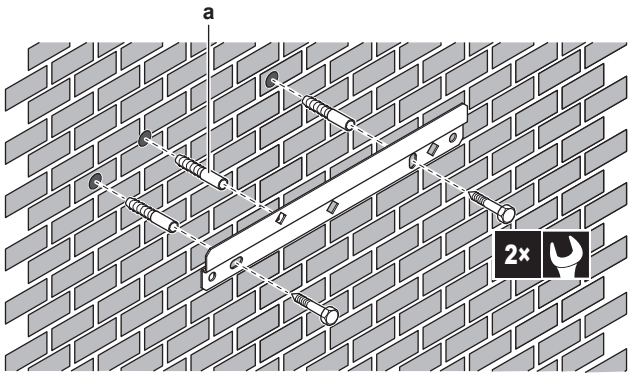

a Recommended: If you want to fix the unit to the wall from inside the unit, provide an additional screw plug.

2 Lift the unit.

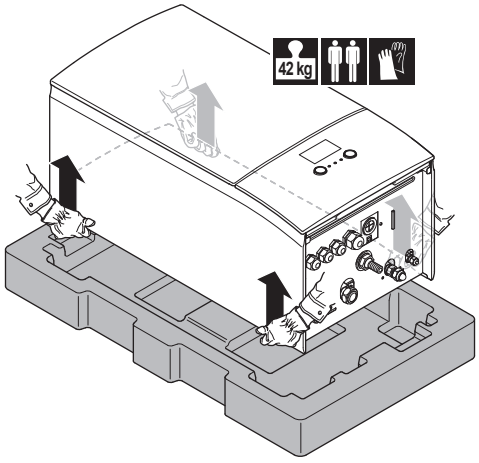

3 Attach the unit to the wall bracket:

- Tilt the top of the unit against the wall at the position of the wall bracket.
- Slide the bracket on the back of the unit over the wall bracket. Make sure the unit is fixed properly.

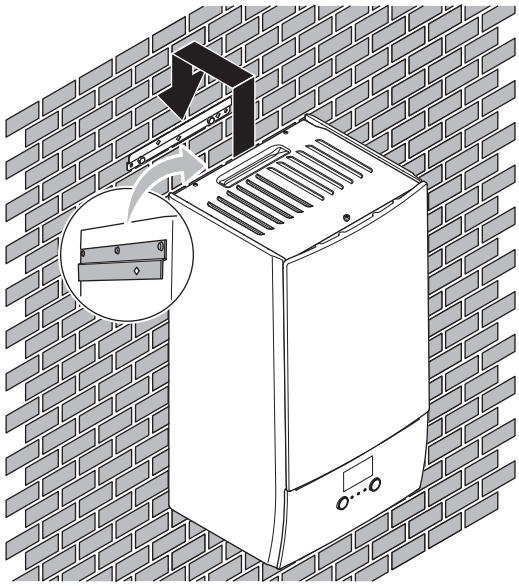

4 Recommended: If you want to fix the unit to the wall from inside the unit:

- Remove the upper front panel, and open the switch box. See "7.2.4 To open the indoor unit" [▶ 72].
- Fix the unit to the wall with an Ø8 mm screw.

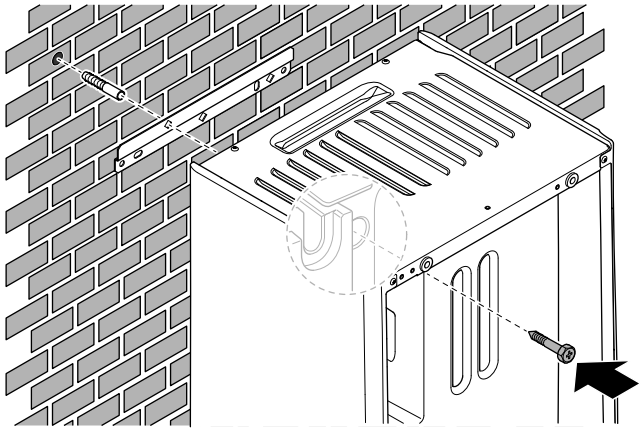

7.4.4 To connect the drain hose to the drain

Water coming from the pressure relief valve is collected in the drain pan. You must connect the drain pan to an appropriate drain according to the applicable legislation.

1 Connect a drain tube (field supply) to the drain pan connector as follows:

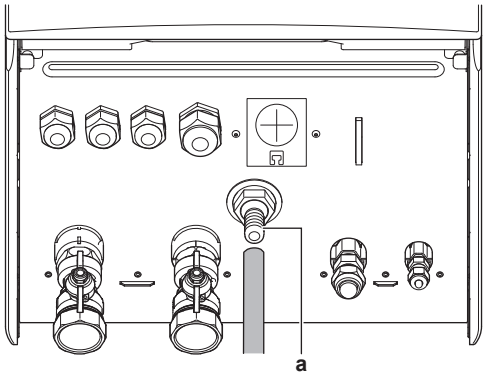

a Drain pan connector

It is recommended to use a tundish to collect the water.

8 Piping installation

In this chapter

8.1 Preparing refrigerant piping 84
8.1.1 Refrigerant piping requirements 84
8.1.2 Refrigerant piping insulation 85
8.2 Connecting the refrigerant piping 85
8.2.1 About connecting the refrigerant piping 85
8.2.2 Precautions when connecting the refrigerant piping 86
8.2.3 Guidelines when connecting the refrigerant piping 87
8.2.4 Pipe bending guidelines 87
8.2.5 To flare the pipe end 87
8.2.6 To braze the pipe end 88
8.2.7 Using the stop valve and service port 89
8.2.8 To connect the refrigerant piping to the outdoor unit 90
8.2.9 To connect the refrigerant piping to the indoor unit 91
8.3 Checking the refrigerant piping 91
8.3.1 About checking the refrigerant piping 91
8.3.2 Precautions when checking the refrigerant piping 92
8.3.3 To check for leaks 92
8.3.4 To perform vacuum drying 92
8.3.5 To insulate the refrigerant piping 93
8.4 Charging refrigerant 94
8.4.1 About charging refrigerant 94
8.4.2 Precautions when charging refrigerant 95
8.4.3 To determine the additional refrigerant amount 95
8.4.4 To determine the complete recharge amount 96
8.4.5 To charge additional refrigerant 96
8.4.6 To fix the fluorinated greenhouse gases label 96
8.5 Preparing water piping 97
8.5.1 Water circuit requirements 97
8.5.2 Formula to calculate the expansion vessel pre-pressure 99
8.5.3 To check the water volume and flow rate 100
8.5.4 Changing the pre-pressure of the expansion vessel 102
8.5.5 To check the water volume: Examples 102
8.6 Connecting water piping 103
8.6.1 About connecting the water piping 103
8.6.2 Precautions when connecting the water piping 103
8.6.3 To connect the water piping 103
8.6.4 To fill the water circuit 105
8.6.5 To fill the domestic hot water tank 105
8.6.6 To insulate the water piping 105

8.1 Preparing refrigerant piping

8.1.1 Refrigerant piping requirements

INFORMATION

Also read the precautions and requirements in the "2 General safety precautions" [▶ 10].

Also see "7.1.4 Special requirements for R32 units" [▶ 66] for additional requirements.

- **Piping length:** See "7.1.3 Installation site requirements of the indoor unit" [▶ 65].

Piping material

Phosphoric acid deoxidised seamless copper

- **Piping connections:** Only flare and brazed connections are allowed. The indoor and outdoor units have flare connections. Connect both ends without brazing. If

brazing should be needed, take the guidelines in the installer reference guide into account.

Flare connections

Only use annealed material.

- **Piping diameter:**

Liquid piping	Ø6.4 mm (1/4")
Gas piping	Ø15.9 mm (5/8")

Piping temper grade and thickness

Outer diameter (Ø)	Temper grade	Thickness (t)[a]	
6.4 mm (1/4")	Annealed (O)	≥0.8 mm	
15.9 mm (5/8")	Annealed (O)	≥1.0 mm	

[a] Depending on the applicable legislation and the maximum working pressure of the unit (see "PS High" on the unit name plate), larger piping thickness might be required.

8.1.2 Refrigerant piping insulation

- Use polyethylene foam as insulation material:
  - with a heat transfer rate between 0.041 and 0.052 W/mK (0.035 and 0.045 kcal/mh°C)
  - with a heat resistance of at least 120°C
- Insulation thickness:

Pipe outer diameter ($Ø_p$)	Insulation inner diameter ($Ø_i$)	Insulation thickness (t)
6.4 mm (1/4")	8~10 mm	10 mm
15.9 mm (5/8")	16~20 mm	13 mm

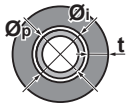

If the temperature is higher than 30°C and the humidity is higher than RH 80%, the thickness of the insulation materials should be at least 20 mm to prevent condensation on the surface of the insulation.

8.2 Connecting the refrigerant piping

8.2.1 About connecting the refrigerant piping

Before connecting the refrigerant piping

Make sure the outdoor and indoor unit are mounted.

Typical workflow

Connecting the refrigerant piping involves:

- Connecting the refrigerant piping to the outdoor unit
- Connecting the refrigerant piping to the indoor unit
- Insulating the refrigerant piping

- Keeping in mind the guidelines for:
  - Pipe bending
  - Flaring pipe ends
  - Brazing
  - Using the stop valves

8.2.2 Precautions when connecting the refrigerant piping

INFORMATION

Also read the precautions and requirements in the following chapters:

- "2 General safety precautions" [▶ 10]
- "8.1 Preparing refrigerant piping" [▶ 84]

DANGER: RISK OF BURNING/SCALDING

NOTICE

- Do NOT use mineral oil on flared part.
- Do NOT reuse piping from previous installations.
- NEVER install a drier to this R32 unit to guarantee its lifetime. The drying material may dissolve and damage the system.

NOTICE

Take the following precautions on refrigerant piping into account:

- Avoid anything but the designated refrigerant to get mixed into the refrigerant cycle (e.g. air).
- Only use R32 when adding refrigerant.
- Only use installation tools (e.g. manifold gauge set) that are exclusively used for R32 installations to withstand the pressure and to prevent foreign materials (e.g. mineral oils and moisture) from mixing into the system.
- Install the piping so that the flare is NOT subjected to mechanical stress.
- Do NOT leave pipes unattended at the site. If the installation is NOT done within 1 day, protect the piping as described in the following table to prevent dirt, liquid or dust from entering the piping.
- Use caution when passing copper tubes through walls (see figure below).

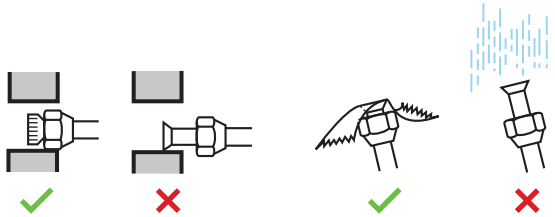

Unit	Installation period	Protection method
Outdoor unit	>1 month	Pinch the pipe
	<1 month	Pinch or tape the pipe
Indoor unit	Regardless of the period	

NOTICE

Do NOT open the refrigerant stop valve before checking the refrigerant piping. When you need to charge additional refrigerant it is recommended to open the refrigerant stop valve after charging.

8.2.3 Guidelines when connecting the refrigerant piping

Take the following guidelines into account when connecting pipes:

- Coat the flare inner surface with ether oil or ester oil when connecting a flare nut. Tighten 3 or 4 turns by hand, before tightening firmly.

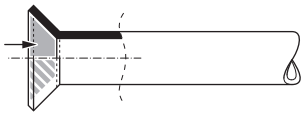

- ALWAYS use two wrenches together when loosening a flare nut.
- ALWAYS use a spanner and torque wrench together to tighten the flare nut when connecting the piping. This to prevent nut cracking and leaks.

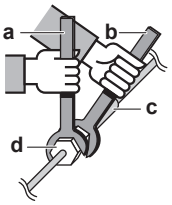

a Torque wrench
b Spanner
c Piping union
d Flare nut

Piping size (mm)	Tightening torque (N•m)	Flare dimensions (A) (mm)	Flare shape (mm)
Ø6.4	15~17	8.7~9.1	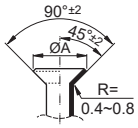
Ø15.9	62~75	19.3~19.7	

8.2.4 Pipe bending guidelines

Use a pipe bender for bending. All pipe bends should be as gentle as possible (bending radius should be 30~40 mm or larger).

8.2.5 To flare the pipe end

CAUTION

- Incomplete flaring may cause refrigerant gas leakage.
- Do NOT re-use flares. Use new flares to prevent refrigerant gas leakage.
- Use flare nuts that are included with the unit. Using different flare nuts may cause refrigerant gas leakage.

1 Cut the pipe end with a pipe cutter.

2 Remove burrs with the cut surface facing down so that the chips do NOT enter the pipe.

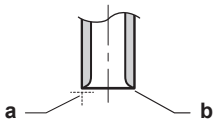

a Cut exactly at right angles.
b Remove burrs.

3 Remove the flare nut from the stop valve and put the flare nut on the pipe.

4 Flare the pipe. Set exactly at the position as shown in the following figure.

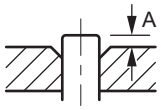

	Flare tool for R32 (clutch type)	Conventional flare tool	
		Clutch type (Ridgid-type)	Wing nut type (Imperial-type)
A	0~0.5 mm	1.0~1.5 mm	1.5~2.0 mm

5 Check that the flaring is properly made.

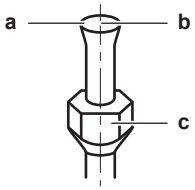

a Flare's inner surface MUST be flawless.
b The pipe end MUST be evenly flared in a perfect circle.
c Make sure the flare nut is fitted.

8.2.6 To braze the pipe end

The indoor unit and outdoor unit have flare connections. Connect both ends without brazing. If brazing should be needed, take the following into account:

- When brazing, blow through with nitrogen to prevent creation of large quantities of oxidised film on the inside of the piping. This film adversely affects valves and compressors in the refrigerating system and prevents proper operation.
- Set the nitrogen pressure to 20 kPa (0.2 bar) (just enough so it can be felt on the skin) with a pressure-reducing valve.

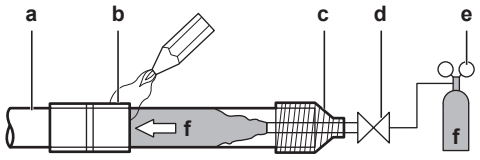

a Refrigerant piping
b Part to be brazed
c Taping
d Manual valve
e Pressure-reducing valve
f Nitrogen

- Do NOT use anti-oxidants when brazing pipe joints. Residue can clog pipes and break equipment.

- Do NOT use flux when brazing copper-to-copper refrigerant piping. Use phosphor copper brazing filler alloy (BCuP), which does NOT require flux.

  Flux has an extremely harmful influence on refrigerant piping systems. For instance, if chlorine based flux is used, it will cause pipe corrosion or, in particular, if the flux contains fluorine, it will deteriorate the refrigerant oil.
- ALWAYS protect the surrounding surfaces (e.g. insulation foam) from heat when brazing.

8.2.7 Using the stop valve and service port

To handle the stop valve

Take the following guidelines into account:

- The stop valves are factory closed.
- The following figure shows the stop valve parts required when handling the valve.

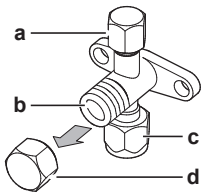

a Service port and service port cap
b Valve stem
c Field piping connection
d Stem cap

- Keep both stop valves open during operation.
- Do NOT apply excessive force to the valve stem. Doing so may break the valve body.
- ALWAYS make sure to secure the stop valve with a spanner, then loosen or tighten the flare nut with a torque wrench. Do NOT place the spanner on the stem cap, as this could cause a refrigerant leak.

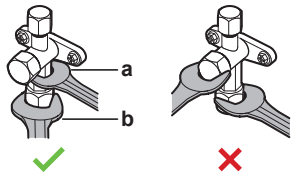

a Spanner
b Torque wrench

- When it is expected that the operating pressure will be low (e.g. when cooling will be performed while the outside air temperature is low), sufficiently seal the flare nut in the stop valve on the gas line with silicon sealant to prevent freezing.

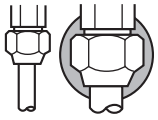

Silicon sealant, make sure there is no gap.

To open/close the stop valve

1. Remove the stop valve cover.
2. Insert a hexagon wrench (liquid side: 4 mm, gas side: 4 mm) into the valve stem and turn the valve stem:

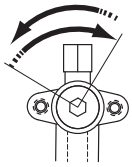

Counterclockwise to open
Clockwise to close

3 When the stop valve CANNOT be turned any further, stop turning.

4 Install the stop valve cover.

Result: The valve is now open/closed.

To handle the stem cap

- The stem cap is sealed where indicated with the arrow. Do NOT damage it.

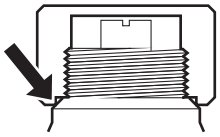

- After handling the stop valve, tighten the stem cap, and check for refrigerant leaks.

Item	Tightening torque (N·m)
Stem cap, liquid side	13.5~16.5
Stem cap, gas side	22.5~27.5

To handle the service cap

- ALWAYS use a charge hose equipped with a valve depressor pin, since the service port is a Schrader type valve.
- After handling the service port, tighten the service port cap, and check for refrigerant leaks.

Item	Tightening torque (N·m)
Service port cap	11.5~13.9

8.2.8 To connect the refrigerant piping to the outdoor unit

- **Piping length.** Keep field piping as short as possible.
- **Piping protection.** Protect the field piping against physical damage.

1 Connect the liquid refrigerant connection from the indoor unit to the liquid stop valve of the outdoor unit.

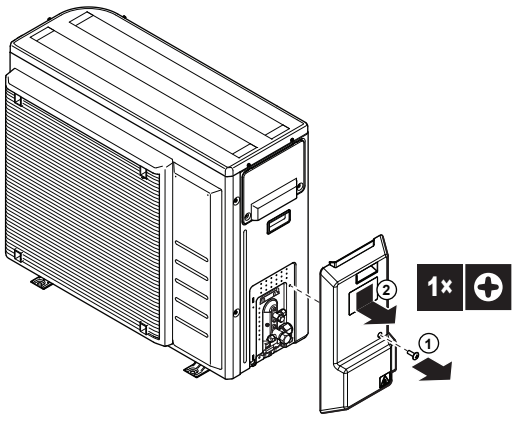

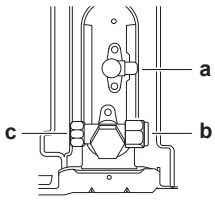

a Liquid stop valve
b Gas stop valve
c Service port

2 Connect the gas refrigerant connection from the indoor unit to the gas stop valve of the outdoor unit.

NOTICE
It is recommended that the refrigerant piping between indoor and outdoor unit is installed in a ducting or the refrigerant piping is wrapped with finishing tape.

8.2.9 To connect the refrigerant piping to the indoor unit

1 Connect the liquid stop valve from the outdoor unit to the refrigerant liquid connection of the indoor unit.

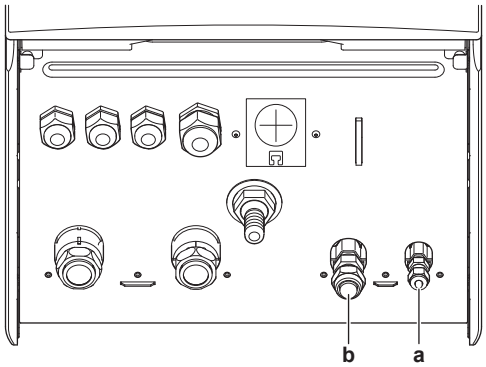

a Refrigerant liquid connection
b Refrigerant gas connection

2 Connect the gas stop valve from the outdoor unit to the refrigerant gas connection of the indoor unit.

NOTICE
It is recommended that the refrigerant piping between indoor and outdoor unit is installed in a ducting or the refrigerant piping is wrapped with finishing tape.

8.3 Checking the refrigerant piping

8.3.1 About checking the refrigerant piping

The outdoor unit's **internal** refrigerant piping has been factory tested for leaks. You only have to check the outdoor unit's **external** refrigerant piping.

Before checking the refrigerant piping

Make sure the refrigerant piping is connected between the outdoor unit and the indoor unit.

Typical workflow

Checking the refrigerant piping typically consists of the following stages:

1 Checking for leaks in the refrigerant piping.

2 Performing vacuum drying to remove all moisture, air or nitrogen from the refrigerant piping.

If there is a possibility of moisture being present in the refrigerant piping (for example, water may have entered the piping), first carry out the vacuum drying procedure below until all moisture has been removed.

8.3.2 Precautions when checking the refrigerant piping

INFORMATION

Also read the precautions and requirements in the following chapters:

- "2 General safety precautions" [▶ 10]
- "8.1 Preparing refrigerant piping" [▶ 84]

NOTICE

Use a 2-stage vacuum pump with a non-return valve that can evacuate to a gauge pressure of −100.7 kPa (−1.007 bar)(5 Torr absolute). Make sure the pump oil does not flow oppositely into the system while the pump is not working.

NOTICE

Use this vacuum pump for R32 exclusively. Using the same pump for other refrigerants may damage the pump and the unit.

NOTICE

- Connect the vacuum pump to the service port of the gas stop valve.
- Make sure that the gas stop valve and liquid stop valve are firmly closed before performing the leak test or vacuum drying.

8.3.3 To check for leaks

NOTICE

Do NOT exceed the unit's maximum working pressure (see "PS High" on the unit name plate).

NOTICE

ALWAYS use a recommended bubble test solution from your wholesaler.

NEVER use soap water:

- Soap water may cause cracking of components, such as flare nuts or stop valve caps.
- Soap water may contain salt, which absorbs moisture that will freeze when the piping gets cold.
- Soap water contains ammonia which may lead to corrosion of flared joints (between the brass flare nut and the copper flare).

1. Charge the system with nitrogen gas up to a gauge pressure of at least 200 kPa (2 bar). It is recommended to pressurize to 3000 kPa (30 bar) or higher (depending on local legislation) to detect small leaks.
2. Check for leaks by applying the bubble test solution to all connections.
3. Discharge all nitrogen gas.

8.3.4 To perform vacuum drying

Connect the vacuum pump and manifold as follows:

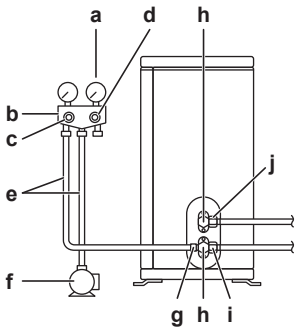

a Pressure meter
b Gauge manifold
c Low pressure valve (Lo)
d High-pressure valve (Hi)
e Charging hoses
f Vacuum pump
g Service port
h Valve lids
i Gas stop valve
j Liquid stop valve

1 Vacuum the system until the pressure reaches a target vacuum of -100.7 kPa (-1.007 bar)(5 Torr absolute).

2 Leave as is for 4-5 minutes and check the pressure:

If the pressure...	Then...
Does not change	There is no moisture in the system. This procedure is finished.
Increases	There is moisture in the system. Go to the next step.

3 Vacuum the system for at least two hours to a target vacuum of -100.7 kPa (-1.007 bar)(5 Torr absolute).

4 After turning the pump OFF, check the pressure for at least one hour.

5 If you do NOT reach the target vacuum or CANNOT maintain the vacuum for one hour, do the following:

- Check for leaks again.
- Perform vacuum drying again.

NOTICE

Make sure to open the stop valves after installing the refrigerant piping and performing vacuum drying. Running the system with the stop valves closed may break the compressor.

INFORMATION

After opening the stop valve, it is possible that the pressure in the refrigerant piping does NOT increase. This might be caused by e.g. the closed state of the expansion valve in the outdoor unit circuit, but does NOT present any problem for correct operation of the unit.

8.3.5 To insulate the refrigerant piping

After finishing the leak test and vacuum drying, the piping must be insulated. Take into account the following points:

- Be sure to insulate the liquid and gas piping (for all units).

- Use heat resistant polyethylene foam which can withstand a temperature of 70°C for liquid piping and polyethylene foam which can withstand a temperature of 120°C for gas piping.
- Reinforce the insulation on the refrigerant piping according to the installation environment.

Ambient temperature	Humidity	Minimum thickness
≤30°C	75% to 80% RH	15 mm
>30°C	≥80% RH	20 mm

NOTICE

It is recommended that the refrigerant piping between indoor and outdoor unit is installed in a ducting or the refrigerant piping is wrapped with finishing tape.

1 Insulate and fix the refrigerant piping and cables as follows:

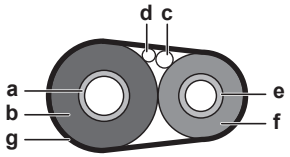

a Gas pipe
b Gas pipe insulation
c Interconnection cable
d Field wiring (if applicable)
e Liquid pipe
f Liquid pipe insulation
g Finishing tape

2 Install the service cover.

8.4 Charging refrigerant

8.4.1 About charging refrigerant

The outdoor unit is factory charged with refrigerant, but in some cases the following might be necessary:

What	When
Charging additional refrigerant	When the total liquid piping length is more than specified (see later).
Completely recharging refrigerant	**Example:** ▪ When relocating the system. ▪ After a leak.

Charging additional refrigerant

Before charging additional refrigerant, make sure the outdoor unit's **external** refrigerant piping is checked (leak test, vacuum drying).

INFORMATION

Depending on the units and/or the installation conditions, it might be necessary to connect electrical wiring before you can charge refrigerant.

Typical workflow – Charging additional refrigerant typically consists of the following stages:

1 Determining if and how much you have to charge additionally.

2 If necessary, charging additional refrigerant.

3 Filling in the fluorinated greenhouse gases label, and fixing it to the inside of the outdoor unit.

Completely recharging refrigerant

Before completely recharging refrigerant, make sure the following is done:

1 All refrigerant is recovered from the system.

2 The outdoor unit's **external** refrigerant piping is checked (leak test, vacuum drying).

3 Vacuum drying on the outdoor unit's **internal** refrigerant piping is performed.

NOTICE

Before completely recharging, perform vacuum drying on the outdoor unit's **internal** refrigerant piping as well.

Typical workflow – Completely recharging refrigerant typically consists of the following stages:

1 Determining how much refrigerant to charge.

2 Charging refrigerant.

3 Filling in the fluorinated greenhouse gases label, and fixing it to the inside of the outdoor unit.

8.4.2 Precautions when charging refrigerant

INFORMATION

Also read the precautions and requirements in the following chapters:

- "2 General safety precautions" [▸ 10]
- "8.1 Preparing refrigerant piping" [▸ 84]

8.4.3 To determine the additional refrigerant amount

WARNING

If the total refrigerant charge in the system is ≥1.84 kg (i.e. if the piping length is ≥27 m), you need to comply with the minimum floor area requirements for the indoor unit. For more information, see "7.1.3 Installation site requirements of the indoor unit" [▸ 65].

If the total liquid piping length is…	Then…
≤10 m	Do NOT add additional refrigerant.
>10 m	R=(total length (m) of liquid piping–10 m)×0.020 R=Additional charge (kg) (rounded in units of 0.01 kg)

INFORMATION

Piping length is the one-way length of liquid piping.

8.4.4 To determine the complete recharge amount

INFORMATION

If a complete recharge is necessary, the total refrigerant charge is: the factory refrigerant charge (see unit name plate) + the determined additional amount.

8.4.5 To charge additional refrigerant

WARNING

- Only use R32 as refrigerant. Other substances may cause explosions and accidents.
- R32 contains fluorinated greenhouse gases. Its global warming potential (GWP) value is 675. Do NOT vent these gases into the atmosphere.
- When charging refrigerant, ALWAYS use protective gloves and safety glasses.

NOTICE

To avoid compressor breakdown, do NOT charge more than the specified amount of refrigerant.

Prerequisite: Before charging refrigerant, make sure the refrigerant piping is connected and checked (leak test and vacuum drying).

1. Connect the refrigerant cylinder to the service port.
2. Charge the additional refrigerant amount.
3. Open the gas stop valve.

If pump down is needed in case of dismantling or relocating the system, see "15.2 To pump down" [▸ 260] for more details.

8.4.6 To fix the fluorinated greenhouse gases label

1. Fill in the label as follows:

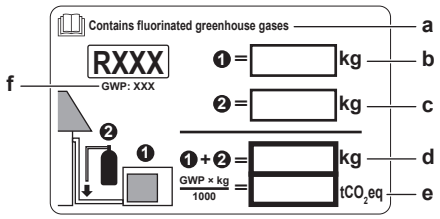

a If a multilingual fluorinated greenhouse gases label is delivered with the unit (see accessories), peel off the applicable language and stick it on top of **a**.
b Factory refrigerant charge: see unit name plate
c Additional refrigerant amount charged
d Total refrigerant charge
e **Quantity of fluorinated greenhouse gases** of the total refrigerant charge expressed as tonnes CO_2 equivalent.
f GWP = Global Warming Potential

NOTICE

Applicable legislation on **fluorinated greenhouse gases** requires that the refrigerant charge of the unit is indicated both in weight and CO_2 equivalent.

Formula to calculate the quantity in CO_2 equivalent tonnes: GWP value of the refrigerant × total refrigerant charge [in kg] / 1000

Use the GWP value mentioned on the refrigerant charge label.

2. Fix the label on the inside of the outdoor unit near the gas and liquid stop valves.

8.5 Preparing water piping

8.5.1 Water circuit requirements

INFORMATION

Also read the precautions and requirements in the "2 General safety precautions" [▶ 10].

NOTICE

In case of plastic pipes, make sure they are fully oxygen diffusion tight according to DIN 4726. The diffusion of oxygen into the piping can lead to excessive corrosion.

- **Connecting piping – Legislation.** Make all piping connections in accordance with the applicable legislation and the instructions in the "Installation" chapter, respecting the water inlet and outlet.
- **Connecting piping – Force.** Do NOT use excessive force when connecting the piping. Deformation of the piping can cause malfunctioning of the unit.
- **Connecting piping – Tools.** Only use appropriate tooling to handle brass, which is a soft material. If NOT, pipes will get damaged.
- **Connecting piping – Air, moisture, dust.** If air, moisture or dust gets into the circuit, problems may occur. To prevent this:
  - ONLY use clean pipes.
  - Hold the pipe end downwards when removing burrs.
  - Cover the pipe end when inserting it through a wall, to prevent dust and/or particles from entering the pipe.
  - Use a decent thread sealant to seal connections.
  - When using non-brass metallic piping, make sure to insulate both materials from each other to prevent galvanic corrosion.
  - Because brass is a soft material, use appropriate tooling for connecting the water circuit. Inappropriate tooling will cause damage to the pipes.
- **Closed circuit.** Use the indoor unit ONLY in a closed water system. Using the system in an open water system will lead to excessive corrosion.
- **Glycol.** For safety reasons, it is NOT allowed to add any kind of glycol to the water circuit.
- **Piping diameter.** Select the water piping diameter in relation to the required water flow and the available external static pressure of the pump. See "16 Technical data" [▶ 262] for the external static pressure curves of the indoor unit.
- **Water flow.** You can find the minimum required water flow for indoor unit operation in the following table. In all cases, this flow needs to be guaranteed. When the flow is lower, the indoor unit will stop operation and display error 7H.

Minimum required flow rate
12 l/min

- **Field supply components – Water.** Only use materials that are compatible with water used in the system and with the materials used in the indoor unit.
- **Field supply components – Water pressure and temperature.** Check that all components in the field piping can withstand the water pressure and water temperature.

- **Water pressure – Space heating/cooling circuit.** The maximum water pressure is 3 bar (=0.3 MPa). Provide adequate safeguards in the water circuit to ensure that the maximum pressure is NOT exceeded. The minimum water pressure to operate is 1 bar (=0.1 MPa).
- **Water temperature.** All installed piping and piping accessories (valve, connections,...) MUST withstand the following temperatures:

> **INFORMATION**
>
> The following figure is an example and may NOT completely match your system layout.

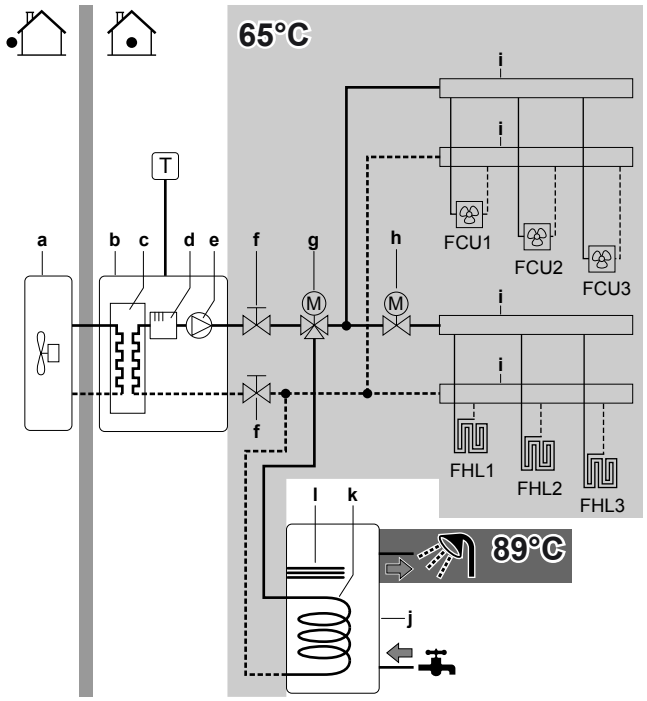

a Outdoor unit
b Indoor unit
c Heat exchanger
d Backup heater
e Pump
f Shut-off valve
g Motorised 3-way valve (supplied with the domestic hot water tank)
h Motorised 2-way valve (field supply)
i Collector
j Domestic hot water tank
k Heat exchanger coil
l Booster heater
FCU1...3 Fan coil unit (optional) (field supply)
FHL1...3 Floor heating loop (field supply)
T Room thermostat (optional) (field supply)

- **Drainage – Low points.** Provide drain taps at all low points of the system in order to allow complete drainage of the water circuit.
- **Drainage – Pressure relief valve.** Connect the drain hose properly to the drain to avoid water dripping out of the unit. See "7.4.4 To connect the drain hose to the drain" [▸ 82].
- **Air vents.** Provide air vents at all high points of the system, which must also be easily accessible for servicing. Two automatic air purges are provided in the indoor unit. Check that the air purges are NOT tightened too much, so that automatic release of air in the water circuit is possible.

- **Zn-coated parts.** NEVER use zinc coated parts in the water circuit. Because the internal water circuit of the unit uses copper piping, excessive corrosion may occur.
- **Non-brass metallic piping.** When using non-brass metallic piping, insulate the brass and non-brass properly so that they do NOT make contact with each other. This is to prevent galvanic corrosion.
- **Valve – Separating circuits.** When using a 3-way valve in the water circuit make sure that the domestic hot water circuit and the floor heating circuit are fully separated.
- **Valve – Changeover time.** When using a 2-way valve or a 3-way valve in the water circuit, the maximum changeover time of the valve must be 60 seconds.
- **Domestic hot water tank – Capacity.** To avoid stagnation of water, it is important that the storage capacity of the domestic hot water tank meets the daily consumption of domestic hot water.
- **Domestic hot water tank – After installation.** Immediately after installation, the domestic hot water tank must be flushed with fresh water. This procedure must be repeated at least once a day the first 5 consecutive days after installation.
- **Domestic hot water tank – Standstills.** In cases where during longer periods of time there is no consumption of hot water, the equipment MUST be flushed with fresh water before usage.
- **Domestic hot water tank – Disinfection.** For the disinfection function of the domestic hot water tank, see "10.6.6 Tank" [▸ 189].
- **Thermostatic mixing valves.** In accordance with the applicable legislation, it may be necessary to install thermostatic mixing valves.
- **Hygienic measures.** The installation must be in compliance with the applicable legislation and may require additional hygienic installation measures.
- **Recirculation pump.** In accordance with the applicable legislation, it may be required to connect a recirculation pump in between the hot water end point and the recirculation connection of the domestic hot water tank (i.e. between **c** and **a**).

  Requirement for France (Arrêté du 30/11/05): If the water volume between the tank hot water outlet and the tap point (i.e. between **b** and **c**) exceeds 3 litres, the water temperature must be maintained at or above 50°C throughout the entire distribution system.

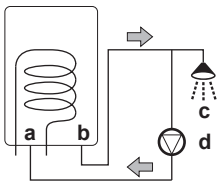

a Recirculation connection
b Hot water connection
c Shower
d Recirculation pump

8.5.2 Formula to calculate the expansion vessel pre-pressure

The pre-pressure (Pg) of the vessel depends on the installation height difference (H):

Pg=0.3+(H/10) (bar)

8.5.3 To check the water volume and flow rate

The indoor unit has an expansion vessel of 10 litre with a factory-set pre-pressure of 1 bar.

To make sure that the unit operates properly:

- You MUST check the minimum and maximum water volume.
- You might need to adjust the pre-pressure of the expansion vessel.

Minimum water volume

The installation needs to be made in such a way that a minimum water volume of 10 litres is always available in the space heating/cooling loop of the unit, even when the available volume towards the unit is reduced because of closure of valves (heat emitters, thermostatic valves, etc.) in the space heating/cooling circuit. The internal water volume of the indoor unit is NOT considered for this minimum water volume.

INFORMATION

In critical processes, or in rooms with a high heat load, extra water might be required.

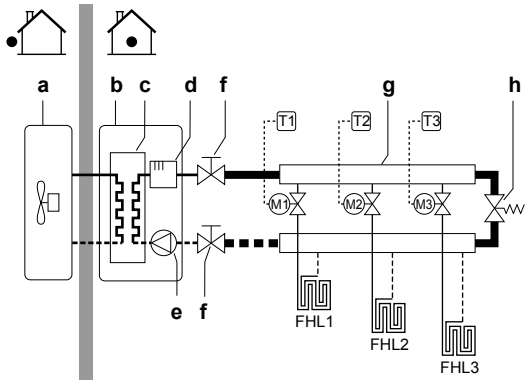

a Outdoor unit
b Indoor unit
c Heat exchanger
d Backup heater
e Pump
f Shut-off valve
g Collector (field supply)
h Differential pressure bypass valve (delivered as accessory)
FHL1...3 Floor heating loop (field supply)
T1...3 Individual room thermostat (optional)
M1...3 Individual motorised valve to control loop FHL1...3 (field supply)

Maximum water volume

Use the following graph to determine the maximum water volume for the calculated pre-pressure.

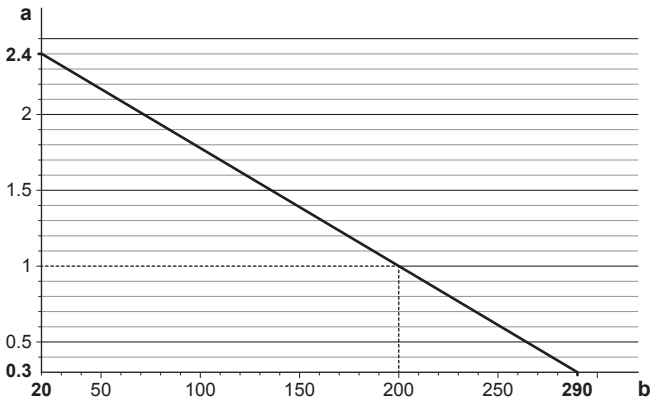

a Pre-pressure (bar)
b Maximum water volume (l)

Example: Maximum water volume and expansion vessel pre-pressure

Installation height difference[(a)]	Water volume	
	≤200 l	>200 l
≤7 m	No pre-pressure adjustment is required.	Do the following: ▪ Decrease the pre-pressure according to the required installation height difference. The pre-pressure should decrease by 0.1 bar for each metre below 7 m. ▪ Check if the water volume does NOT exceed the maximum allowed water volume.
>7 m	Do the following: ▪ Increase the pre-pressure according to the required installation height difference. The pre-pressure should increase by 0.1 bar for each metre above 7 m. ▪ Check if the water volume does NOT exceed the maximum allowed water volume.	The expansion vessel of the indoor unit is too small for the installation. In this case, it is recommended to install an extra vessel outside the unit.

[(a)] This is the height difference (m) between the highest point of the water circuit and the indoor unit. If the indoor unit is at the highest point of the installation, the installation height is 0 m.

Minimum flow rate

Check that the minimum flow rate in the installation is guaranteed in all conditions. This minimum flow rate is required during defrost/backup heater operation. For this purpose, use the differential pressure bypass valve delivered with the unit, and respect the minimum water volume.

Minimum required flow rate
12 l/min

NOTICE

When circulation in each or certain space heating loops is controlled by remotely controlled valves, it is important that the minimum flow rate is guaranteed, even if all valves are closed. In case the minimum flow rate cannot be reached, a flow error 7H will be generated (no heating or operation).

See the recommended procedure as described in "11.4 Checklist during commissioning" [▸ 234].

8.5.4 Changing the pre-pressure of the expansion vessel

NOTICE

ONLY a licensed installer may adjust the pre-pressure of the expansion vessel.

The default pre-pressure of the expansion vessel is 1 bar. When it is required to change the pre-pressure, take following guidelines into account:

- Only use dry nitrogen to set the expansion vessel pre-pressure.
- Inappropriate setting of the expansion vessel pre-pressure will lead to malfunction of the system.

Changing the pre-pressure of the expansion vessel should be done by releasing or increasing nitrogen pressure through the Schrader valve of the expansion vessel.

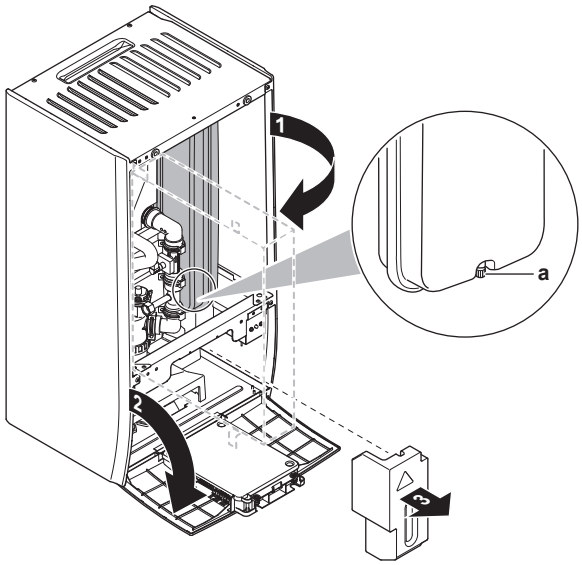

a Schrader valve

8.5.5 To check the water volume: Examples

Example 1

The indoor unit is installed 5 m below the highest point in the water circuit. The total water volume in the water circuit is 100 l.

No actions or adjustments are required.

Example 2

The indoor unit is installed at the highest point in the water circuit. The total water volume in the water circuit is 250 l.

Actions:

- Because the total water volume (250 l) is more than the default water volume (200 l), the pre-pressure must be decreased.

- The required pre-pressure is:
  Pg = (0.3+(H/10)) bar = (0.3+(0/10)) bar = 0.3 bar
- The corresponding maximum water volume at 0.3 bar is 290 l. (See the graph in "Maximum water volume" [▸ 100]).
- Because 250 l is lower than 290 l, the expansion vessel is appropriate for the installation.

8.6 Connecting water piping

8.6.1 About connecting the water piping

Before connecting the water piping

Make sure the outdoor and indoor unit are mounted.

Typical workflow

Connecting the water piping typically consists of the following stages:

1 Connecting the water piping to the indoor unit.
2 Connecting the drain hose to the drain.
3 Filling the water circuit.
4 Filling the domestic hot water tank.
5 Insulating the water piping.

8.6.2 Precautions when connecting the water piping

INFORMATION

Also read the precautions and requirements in the following chapters:

- "2 General safety precautions" [▸ 10]
- "8.5 Preparing water piping" [▸ 97]

8.6.3 To connect the water piping

NOTICE

Do NOT use excessive force when connecting the piping. Deformation of the piping can cause malfunctioning of the unit.

To facilitate service and maintenance, 2 shut-off valves and 1 differential pressure bypass valve are provided. Mount the shut-off valves on the space heating water inlet and space heating water outlet. To ensure the minimum flow rate (and prevent overpressure), install the differential pressure bypass valve on the space heating water outlet.

1 Install the shut-off valves on the water pipes.

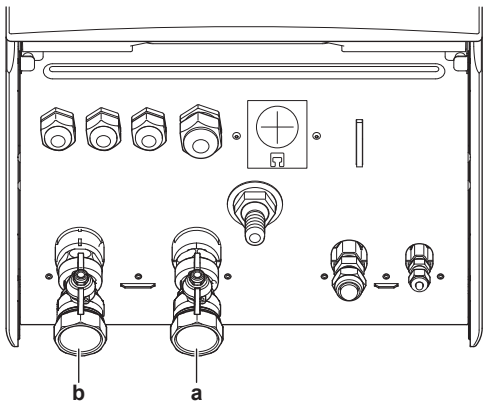

a Water inlet
b Water outlet

2 Screw the indoor unit nuts on the shut-off valves.

3 Connect the field piping on the shut-off valves.

4 In case of connection with the optional domestic hot water tank, see the installation manual of the domestic hot water tank.

NOTICE

Install air purge valves at all local high points.

NOTICE



Differential pressure bypass valve (delivered as accessory). We recommend to install the differential pressure bypass valve in the space heating water circuit.

- Mind the minimum water volume when choosing the installation location of the differential pressure bypass valve (at the indoor unit, or at the collector). See "8.5.3 To check the water volume and flow rate" [▸ 100].
- Mind the minimum flow rate when adjusting the differential pressure bypass valve setting. See "8.5.3 To check the water volume and flow rate" [▸ 100] and "11.4.1 Minimum flow rate" [▸ 234].

NOTICE

To avoid damage to the surroundings in case of water leakage, it is recommended to close the domestic cold water inlet shut-off valves during periods of absence.

NOTICE

In case an optional domestic hot water tank is installed: A pressure relief valve (field supply) with an opening pressure of maximum 10 bar (= 1 MPa) must be installed on the domestic cold water inlet connection in accordance with the applicable legislation.

NOTICE

In case an optional domestic hot water tank is installed:

- A drain device and pressure relief device must be installed on the cold water inlet connection of the domestic hot water cylinder.
- To avoid back siphonage, it is recommended to install a non-return valve on the water inlet of the domestic hot water tank in accordance with the applicable legislation. Make sure it is NOT between the pressure relief valve and the DHW tank.
- It is recommended to install a pressure reducing valve on the cold water inlet in accordance with the applicable legislation.
- It is recommended to install an expansion vessel on the cold water inlet in accordance with the applicable legislation.
- It is recommended to install the pressure relief valve on a higher position than the top of the domestic hot water tank. Heating of the domestic hot water tank causes water to expand and without pressure relief valve the water pressure inside the tank can rise above the tank design pressure. Also the field installation (piping, tapping points, etc.) connected to the tank is subjected to this high pressure. To prevent this, a pressure relief valve needs to be installed. The overpressure prevention depends on the correct operation of the field installed pressure relief valve. If this is NOT working correctly, overpressure will deform the tank and water leakage may occur. To confirm good operation, regular maintenance is required.

8.6.4 To fill the water circuit

To fill the water circuit, use a field supply filling kit. Make sure you comply with the applicable legislation.

INFORMATION

Make sure both air purge valves (one on the magnetic filter and one on the backup heater) are open.

8.6.5 To fill the domestic hot water tank

See the installation manual of the domestic hot water tank.

8.6.6 To insulate the water piping

The piping in the complete water circuit MUST be insulated to prevent condensation during cooling operation and reduction of the heating and cooling capacity.

If the temperature is higher than 30°C and the humidity is higher than RH 80%, the thickness of the insulation materials should be at least 20 mm to prevent condensation on the surface of the insulation.

9 Electrical installation

In this chapter

9.1 About connecting the electrical wiring 106
9.1.1 Precautions when connecting the electrical wiring 106
9.1.2 Guidelines when connecting the electrical wiring 107
9.1.3 About electrical compliance 109
9.1.4 About preferential kWh rate power supply 109
9.1.5 Overview of electrical connections except external actuators 110
9.2 Connections to the outdoor unit 110
9.2.1 Specifications of standard wiring components 111
9.2.2 To connect the electrical wiring to the outdoor unit 111
9.3 Connections to the indoor unit 113
9.3.1 To connect the main power supply 116
9.3.2 To connect the backup heater power supply 118
9.3.3 To connect the shut-off valve 121
9.3.4 To connect the electricity meters 122
9.3.5 To connect the domestic hot water pump 123
9.3.6 To connect the alarm output 124
9.3.7 To connect the space cooling/heating ON/OFF output 125
9.3.8 To connect the changeover to external heat source 126
9.3.9 To connect the power consumption digital inputs 127
9.3.10 To connect the safety thermostat 128
9.3.11 Smart Grid 129
9.3.12 To connect the WLAN cartridge (delivered as accessory) 133

9.1 About connecting the electrical wiring

Before connecting the electrical wiring

Make sure:

- The refrigerant piping is connected and checked
- The water piping is connected

Typical workflow

Connecting the electrical wiring typically consists of the following stages:

- "9.2 Connections to the outdoor unit" [▸ 110]
- "9.3 Connections to the indoor unit" [▸ 113]

9.1.1 Precautions when connecting the electrical wiring



DANGER: RISK OF ELECTROCUTION



WARNING

- All wiring MUST be performed by an authorised electrician and MUST comply with the national wiring regulation.
- Make electrical connections to the fixed wiring.
- All components procured on-site and all electrical construction MUST comply with the applicable legislation.



WARNING

ALWAYS use multicore cable for power supply cables.

INFORMATION

Also read the precautions and requirements in the "2 General safety precautions" [▶ 10].

WARNING

- If the power supply has a missing or wrong N-phase, equipment might break down.
- Establish proper earthing. Do NOT earth the unit to a utility pipe, surge absorber, or telephone earth. Incomplete earthing may cause electrical shocks.
- Install the required fuses or circuit breakers.
- Secure the electrical wiring with cable ties so that the cables do NOT come in contact with sharp edges or piping, particularly on the high-pressure side.
- Do NOT install a phase advancing capacitor, because this unit is equipped with an inverter. A phase advancing capacitor will reduce performance and may cause accidents.

CAUTION

Do NOT push or place redundant cable length into the unit.

NOTICE

The distance between the high voltage and low voltage cables should be at least 50 mm.

WARNING

Do NOT extend the power supply or the interconnection cable by using wire connectors, wire connection clamps, taped wires, extension cords.

These can cause overheating, electric shock or fire.

9.1.2 Guidelines when connecting the electrical wiring

NOTICE

We recommend using solid (single-core) wires. If stranded wires are used, slightly twist the strands to consolidate the end of the conductor for either direct use in the terminal clamp or insertion in a round crimp-style terminal.

To prepare stranded conductor wire for installation

Method 1: Twisting conductor

1 Strip insulation (20 mm) from the wires.

2 Slightly twist the end of the conductor to create a "solid-like" connection.

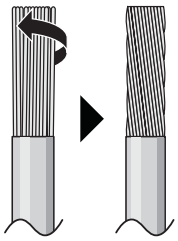

Method 2: Using round crimp-style terminal (recommended)

1 Strip insulation from wires and slightly twist the end of each wire.

2 Install a round crimp-style terminal on the end of the wire. Place the round crimp-style terminal on the wire up to the covered part and fasten the terminal with the appropriate tool.

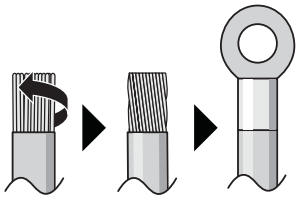

Use the following methods for installing wires:

Wire type	Installation method
Single-core wire Or Stranded conductor wire twisted to "solid-like" connection	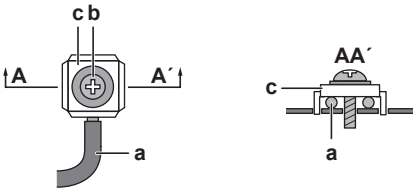 **a** Curled wire (single-core or twisted stranded conductor wire) **b** Screw **c** Flat washer
Stranded conductor wire with round crimp-style terminal	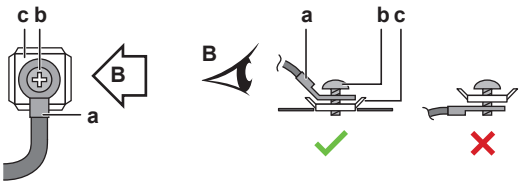 **a** Terminal **b** Screw **c** Flat washer ✓ Allowed ✕ NOT allowed

Tightening torques

Outdoor unit:

Item	Tightening torque (N•m)
M4 (X1M)	1.2~1.5
M4 (earth)	

Indoor unit:

Item	Tightening torque (N•m)
X1M	2.45 ±10%
X2M	0.88 ±10%
X5M	0.88 ±10%
X6M	2.45 ±10%
X7M, X8M	2.45 ±10%
X10M	0.88 ±10%

Item	Tightening torque (N•m)
M4 (earth)	1.47 ±10%

9.1.3 About electrical compliance

Only for ERGA04E▲V3▼, ERGA06E▲V3H▼ and ERGA08E▲V3H▼ (not for ERGA04~08E▲V3A▼)

Equipment complying with EN/IEC 61000-3-12 (European/International Technical Standard setting the limits for harmonic currents produced by equipment connected to public low-voltage systems with input current >16 A and ≤75 A per phase.).

Only for the backup heater of the indoor unit

See "9.3.2 To connect the backup heater power supply" [▸ 118].

9.1.4 About preferential kWh rate power supply

Electricity companies throughout the world work hard to provide reliable electric service at competitive prices and are often authorised to bill clients at benefit rates. E.g. time-of-use rates, seasonal rates, Wärmepumpentarif in Germany and Austria, ...

This equipment allows for connection to such preferential kWh rate power supply delivery systems.

Consult with the electricity company acting as provider at the site where this equipment is to be installed to know whether it is appropriate to connect the equipment in one of the preferential kWh rate power supply delivery systems available, if any.

When the equipment is connected to such preferential kWh rate power supply, the electricity company is allowed to:

- interrupt power supply to the equipment for certain periods of time;
- demand that the equipment ONLY consumes a limited amount of electricity during certain periods of time.

The indoor unit is designed to receive an input signal by which the unit switches into forced OFF mode. At that moment, the outdoor unit compressor will NOT operate.

The wiring to the unit is different depending on whether the power supply is interrupted or NOT.

9.1.5 Overview of electrical connections except external actuators

Normal power supply	Preferential kWh rate power supply	
	Power supply is NOT interrupted	**Power supply is interrupted**
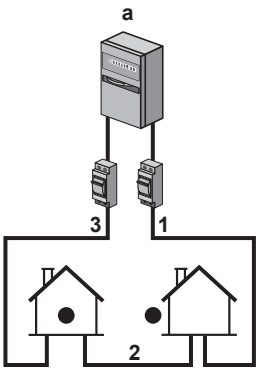	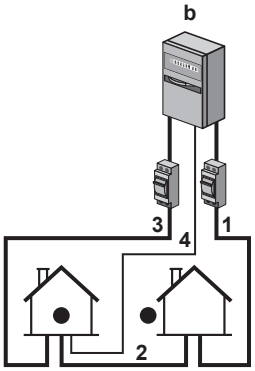 During preferential kWh rate power supply activation, power supply is NOT interrupted. The outdoor unit is turned off by the control. **Remark:** The electricity company must always allow the power consumption of the indoor unit.	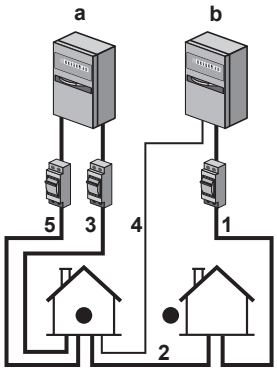 During preferential kWh rate power supply activation, power supply is interrupted immediately or after some time by the electricity company. In this case, the indoor unit must be powered by a separate normal power supply.

a Normal power supply

b Preferential kWh rate power supply

1 Power supply for outdoor unit

2 Power supply and interconnection cable to indoor unit

3 Power supply for backup heater

4 Preferential kWh rate power supply (voltage free contact)

5 Normal kWh rate power supply (to power the indoor unit PCB in the event of power supply interruption of the preferential kWh rate power supply)

9.2 Connections to the outdoor unit

Item	Description
Power supply cable	See "9.2.2 To connect the electrical wiring to the outdoor unit" [▶ 111].
Interconnection cable	

9.2.1 Specifications of standard wiring components

Component		ERGA04E▲V3▼ ERGA06E▲V3H▼	ERGA08E▲V3H▼	ERGA04~08E▲V3A▼
Power supply cable	MCA[a]	19.9 A	24.0 A	15.9 A
	Voltage	220-240 V		
	Phase	1~		
	Frequency	50 Hz		
	Wire size	MUST comply with national wiring regulation. 3-core cable Wire size based on the current, but not less than 2.5 mm^2		
Interconnection cable (indoor ↔ outdoor)	Voltage	220-240 V		
	Wire size	Only use harmonised wire providing double insulation and suitable for applicable voltage. 4-core cable Minimum 1.5 mm^2		
Recommended field fuse		20 A	25 A	16 A
Earth leakage circuit breaker / residual current device		In the power supply line, ALWAYS install a residual current device (RCD) that complies with the national wiring regulation. This MUST be an RCD of 30 mA with an instantaneous action, unless otherwise defined by the national wiring regulation.		

[a] MCA=Minimum circuit ampacity. Stated values are maximum values (see electrical data of combination with indoor units for exact values).

9.2.2 To connect the electrical wiring to the outdoor unit

WARNING

Do NOT extend the power supply or the interconnection cable by using wire connectors, wire connection clamps, taped wires, extension cords.

These can cause overheating, electric shock or fire.

1 Remove the switch box cover.

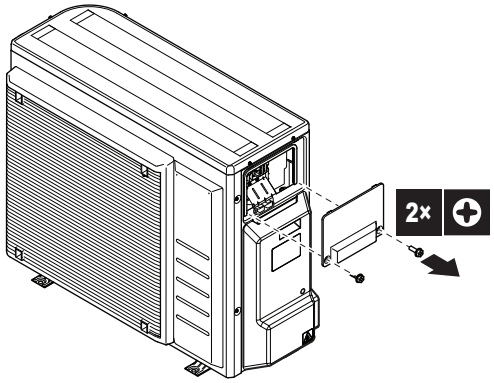

2 Remove the refrigerant piping cover.

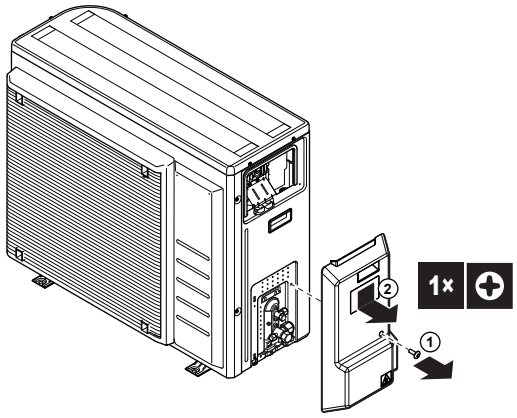

3 Strip insulation (20 mm) from the wires.

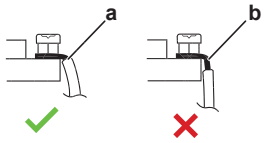

a Strip wire end to this point
b An excessive strip length may cause electrical shock or leakage

4 Connect the interconnection cable and power supply as follows. Ensure stress relief by using the wire clamp.

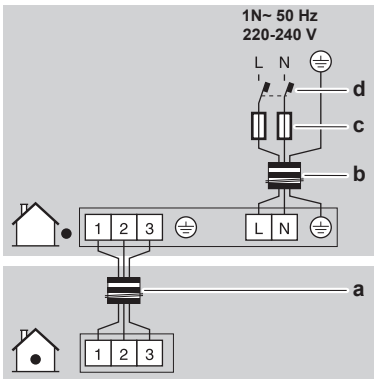

a Interconnection cable
b Power supply cable
c Fuse
d Earth leakage circuit breaker

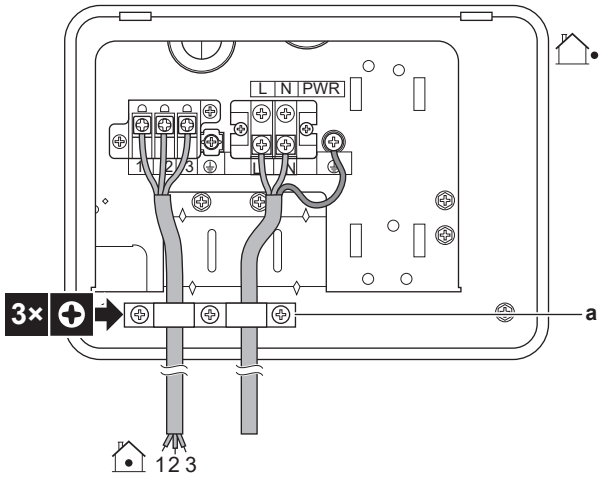

a Wire clamp

5 Reattach the switch box cover.

6 Reattach the refrigerant piping cover. Make sure the cables are routed under the cover as shown:

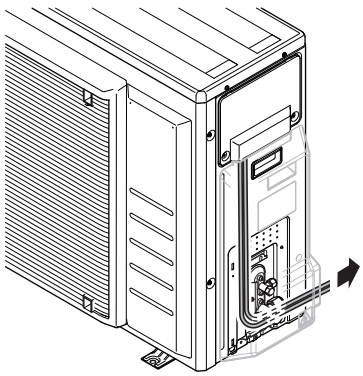

7 Connect an earth leakage circuit breaker and fuse to the power supply line.

9.3 Connections to the indoor unit

Item	Description
Power supply (main)	See "9.3.1 To connect the main power supply" [▶ 116].
Power supply (backup heater)	See "9.3.2 To connect the backup heater power supply" [▶ 118].
Shut-off valve	See "9.3.3 To connect the shut-off valve" [▶ 121].
Electricity meters	See "9.3.4 To connect the electricity meters" [▶ 122].
Domestic hot water pump	See "9.3.5 To connect the domestic hot water pump" [▶ 123].
Alarm output	See "9.3.6 To connect the alarm output" [▶ 124].
Space cooling/heating operation control	See "9.3.7 To connect the space cooling/heating ON/OFF output" [▶ 125].
Changeover to external heat source control	See "9.3.8 To connect the changeover to external heat source" [▶ 126].
Power consumption digital inputs	See "9.3.9 To connect the power consumption digital inputs" [▶ 127].
Safety thermostat	See "9.3.10 To connect the safety thermostat" [▶ 128].
Smart Grid	See "9.3.11 Smart Grid" [▶ 129].
WLAN cartridge	See "9.3.12 To connect the WLAN cartridge (delivered as accessory)" [▶ 133].
Room thermostat (wired or wireless)	See below table.
	Wires: 0.75 mm² Maximum running current: 100 mA
	For the main zone: ▪ [2.9] `Control` ▪ [2.A] `Ext thermostat type` For the additional zone: ▪ [3.A] `Ext thermostat type` ▪ [3.9] (read-only) `Control`

Item		Description
Heat pump convector		There are different controllers and setups possible for the heat pump convectors. Depending on the setup, you also need to implement a relay (field supply, see addendum book for optional equipment). For more information, see: ▪ Installation manual of the heat pump convectors ▪ Installation manual of the heat pump convector options ▪ Addendum book for optional equipment
		Wires: 0.75 mm² Maximum running current: 100 mA
		For the main zone: ▪ [2.9] `Control` ▪ [2.A] `Ext thermostat type` For the additional zone: ▪ [3.A] `Ext thermostat type` ▪ [3.9] (read-only) `Control`
Remote outdoor sensor		See: ▪ Installation manual of the remote outdoor sensor ▪ Addendum book for optional equipment
		Wires: 2×0.75 mm²
		[9.B.1]=1 (`External sensor` = `Outdoor`) [9.B.2] `Ext. amb. sensor offset` [9.B.3] `Averaging time`
Remote indoor sensor		See: ▪ Installation manual of the remote indoor sensor ▪ Addendum book for optional equipment
		Wires: 2×0.75 mm²
		[9.B.1]=2 (`External sensor` = `Room`) [1.7] `Room sensor offset`
Human Comfort Interface		See: ▪ Installation and operation manual of the Human Comfort Interface ▪ Addendum book for optional equipment
		Wires: 2×(0.75~1.25 mm²) Maximum length: 500 m
		[2.9] `Control` [1.6] `Room sensor offset`

Item	Description
(in case of DHW tank) 3-way valve	See: ▪ Installation manual of the 3-way valve ▪ Addendum book for optional equipment
	Wires: 3×0.75 mm² Maximum running current: 100 mA
	[9.2] `Domestic hot water`
(in case of DHW tank) Domestic hot water tank thermistor	See: ▪ Installation manual of the domestic hot water tank ▪ Addendum book for optional equipment
	Wires: 2 The thermistor and connection wire (12 m) are delivered with the domestic hot water tank.
	[9.2] `Domestic hot water`
(in case of DHW tank) Power supply for booster heater (from indoor unit to thermal protector of booster heater)	See: ▪ Installation manual of the DHW tank ▪ Addendum book for optional equipment
	Wires: (2+GND)×2.5 mm²
	[9.4] `Booster heater`
(in case of DHW tank) Power supply for booster heater (from mains to indoor unit)	See: ▪ Installation manual of the domestic hot water tank ▪ Addendum book for optional equipment
	Wires: 2+GND Maximum running current: 13 A
	[9.4] `Booster heater`
WLAN module	See: ▪ Installation manual of the WLAN module ▪ Addendum book for optional equipment ▪ Installer reference guide
	Use the cable delivered with the WLAN module.
	[D] `Wireless gateway`

Item	Description
LAN adapter	See: ▪ Installation manual of the LAN adapter ▪ Addendum book for optional equipment
	Wires: 2×(0.75~1.25 mm²). Must be sheathed. Maximum length: 200 m
	See installation manual of the LAN adapter

for room thermostat (wired or wireless):

In case of...	See...
Wireless room thermostat	▪ Installation manual of the wireless room thermostat ▪ Addendum book for optional equipment
Wired room thermostat without multi-zoning base unit	▪ Installation manual of the wired room thermostat ▪ Addendum book for optional equipment
Wired room thermostat with multi-zoning base unit	▪ Installation manual of the wired room thermostat (digital or analogue) + multi-zoning base unit ▪ Addendum book for optional equipment ▪ In this case: - You need to connect the wired room thermostat (digital or analogue) to the multi-zoning base unit - You need to connect the multi-zoning base unit to the outdoor unit - For cooling/heating operation, you also need to implement a relay (field supply, see addendum book for optional equipment)

9.3.1 To connect the main power supply

NOTICE

The pump is equipped with an anti-blockage safety routine. This means that the pump operates for a short period of time every 24 hours during long periods of inactivity to ensure it does not get stuck. To enable this function, the unit must be connected to the power supply all year round.

1 Open the following (see "7.2.4 To open the indoor unit" [▸ 72]):

1	Front panel
2	Switch box cover
3	Switch box

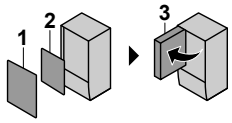

2 Connect the main power supply.

In case of normal kWh rate power supply

	Interconnection cable (= main power supply)	Wires: (3+GND)×1.5 mm²
	—	

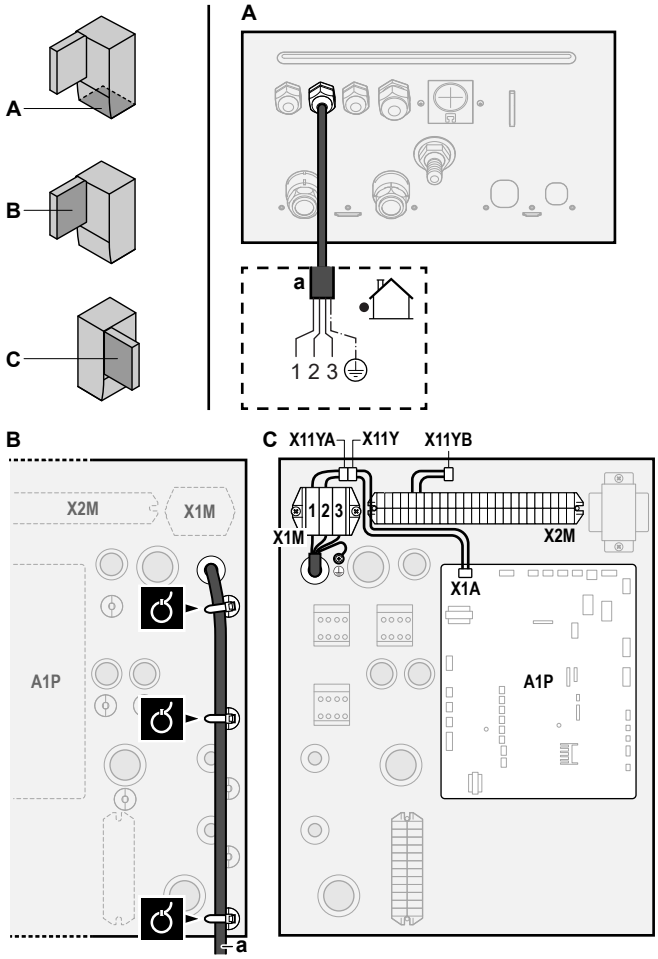

a Interconnection cable (=main power supply)

In case of preferential kWh rate power supply

	Interconnection cable (= main power supply)	Wires: (3+GND)×1.5 mm²
	Normal kWh rate power supply	Wires: 1N Maximum running current: 6.3 A
	Preferential kWh rate power supply contact	Wires: 2×(0.75~1.25 mm²) Maximum length: 50 m. Preferential kWh rate power supply contact: 16 V DC detection (voltage supplied by PCB). The voltage-free contact shall ensure the minimum applicable load of 15 V DC, 10 mA.
	[9.8] `Benefit kWh power supply`	

Connect X11Y to X11YB.

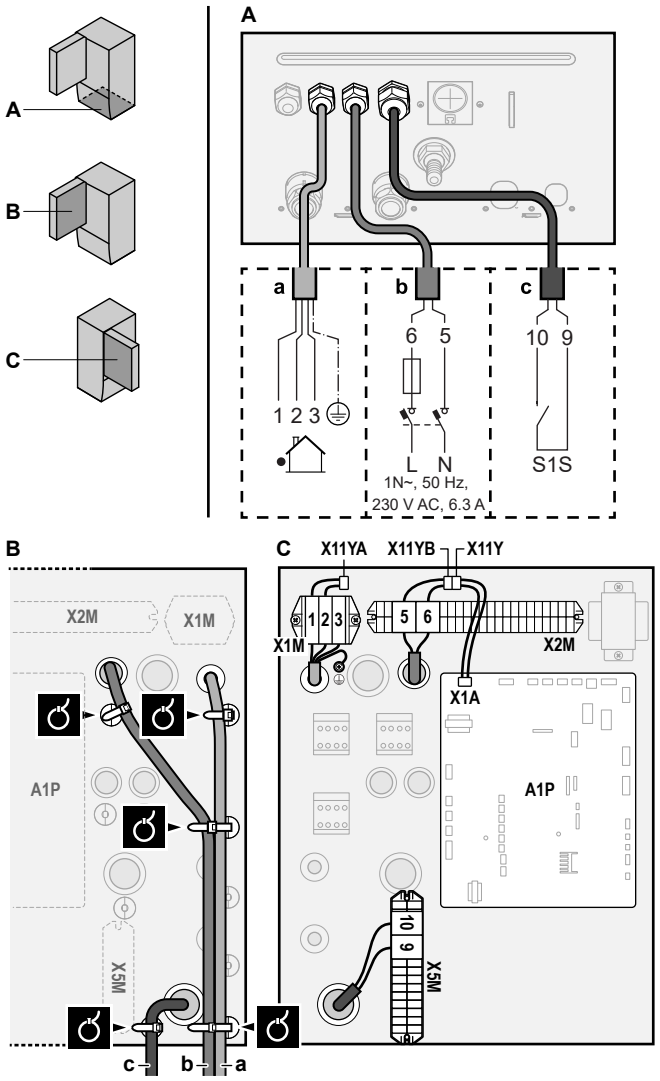

a Interconnection cable (=main power supply)
b Normal kWh rate power supply
c Preferential power supply contact

3 Fix the cables with cable ties to the cable tie mountings.

INFORMATION

In case of preferential kWh rate power supply, connect X11Y to X11YB. The necessity of separate normal kWh rate power supply to indoor unit (b) X2M/5+6 depends on the type of preferential kWh rate power supply.

Separate connection to the indoor unit is required:

- if preferential kWh rate power supply is interrupted when active, OR
- if no power consumption of the indoor unit is allowed at the preferential kWh rate power supply when active.

9.3.2 To connect the backup heater power supply

	Backup heater type	Power supply	Wires
	*6V	1N~ 230 V (6V3)	2+GND
		3~ 230 V (6T1)	3+GND
	*9W	3N~ 400 V	4+GND
	[9.3] `Backup heater`		

WARNING

The backup heater MUST have a dedicated power supply and MUST be protected by the safety devices required by the applicable legislation.

CAUTION

If the indoor unit has a separate tank with a built-in electrical booster heater, use a dedicated power circuit for the backup heater and booster heater. NEVER use a power circuit shared by another appliance. This power circuit MUST be protected with the required safety devices according to the applicable legislation.

CAUTION

To guarantee the unit is completely earthed, ALWAYS connect the backup heater power supply and the earth cable.

The backup heater capacity can vary, depending on the indoor unit model. Make sure that the power supply is in accordance with the backup heater capacity, as listed in the table below.

Backup heater type	Backup heater capacity	Power supply	Maximum running current	Z_{max}
*6V	2 kW	1N~ 230 V[(a)]	9 A	—
	4 kW	1N~ 230 V[(a)]	17 A[(b)(c)]	0.22 Ω
	6 kW	1N~ 230 V[(a)]	26 A[(b)(c)]	0.22 Ω
	2 kW	3~ 230 V[(d)]	5 A	—
	4 kW	3~ 230 V[(d)]	10 A	—
	6 kW	3~ 230 V[(d)]	15 A	—
*9W	3 kW	3N~ 400 V	4 A	—
	6 kW	3N~ 400 V	9 A	—
	9 kW	3N~ 400 V	13 A	—

(a) 6V3

(b) Electrical equipment complying with EN/IEC 61000-3-12 (European/International Technical Standard setting the limits for harmonic currents produced by equipment connected to public low-voltage systems with input current >16 A and ≤75 A per phase).

(c) This equipment complies with EN/IEC 61000-3-11 (European/International Technical Standard setting the limits for voltage changes, voltage fluctuations and flicker in public low-voltage supply systems for equipment with rated current ≤75 A) provided that the system impedance Z_{sys} is less than or equal to Z_{max} at the interface point between the user's supply and the public system. It is the responsibility of the installer or user of the equipment to ensure, by consultation with the distribution network operator if necessary, that the equipment is connected only to a supply with a system impedance Z_{sys} less than or equal to Z_{max}.

(d) 6T1

Connect the backup heater power supply as follows:

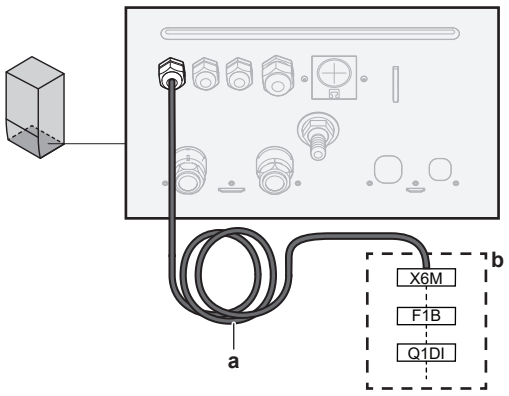

a Factory-mounted cable connected to the contactor of the backup heater, inside the switch box (K5M)
b Field wiring (see table below)

Model (power supply)	Connections to backup heater power supply
*6V (6V3: 1N~ 230 V) PATTERN A Recommended F1B: 4-pole 20 A Wire size[a]: Min. 2.5 mm² (AWG13)	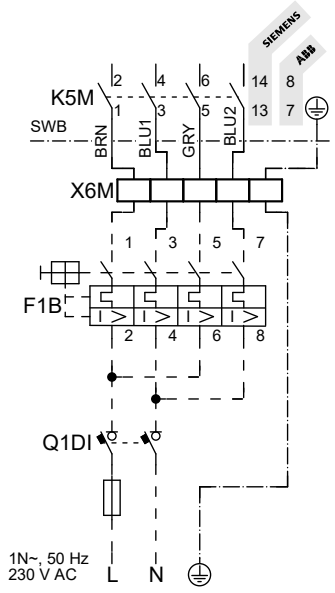
*6V (6V3: 1N~ 230 V) PATTERN B Recommended F1B: 2-pole 32 A Wire size[a]: Min. 6 mm² (AWG10)	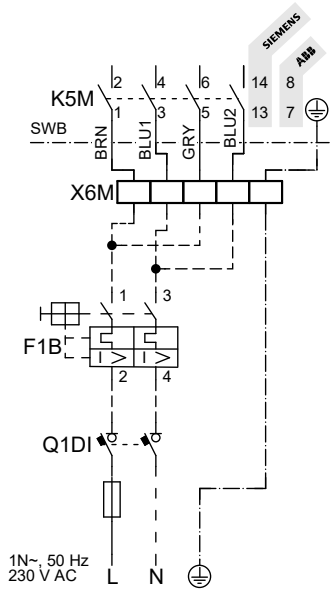

Model (power supply)	Connections to backup heater power supply
*6V (6T1: 3~ 230 V) Recommended F1B: 4-pole 20 A Wire size[(a)]: Min. 2.5 mm² (AWG13)	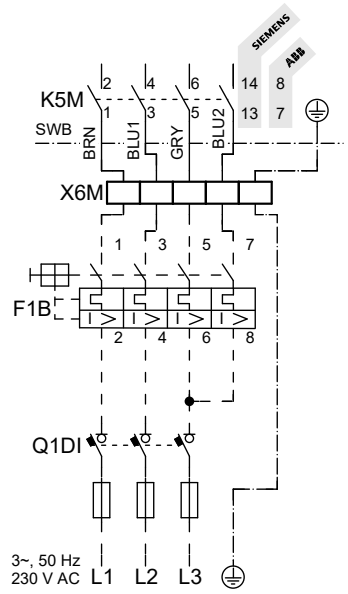
*9W (3N~ 400 V) Recommended F1B: 4-pole 20 A Wire size[(a)]: Min. 2.5 mm² (AWG13)	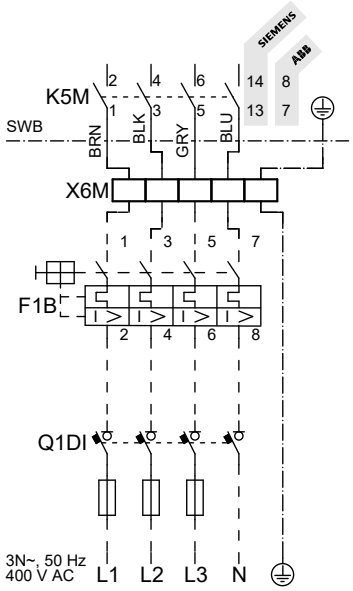

(a) Wire size based on the current, but minimum as specified. MUST comply with national wiring regulation.
F1B Overcurrent fuse (field supply)
K5M Safety contactor (in the switch box)
Q1DI Earth leakage circuit breaker (field supply)
SWB Switch box
X6M Terminal (field supply)

NOTICE

Do NOT cut or remove the backup heater power supply cable.

9.3.3 To connect the shut-off valve

INFORMATION

Shut-off valve usage example. In case of one LWT zone, and a combination of underfloor heating and heat pump convectors, install a shut-off valve before the underfloor heating to prevent condensation on the floor during cooling operation.

	Wires: 2×0.75 mm² Maximum running current: 100 mA 230 V AC supplied by PCB
	[2.D] `Shut off valve`

1 Open the following (see "7.2.4 To open the indoor unit" [▶ 72]):

1	Front panel
2	Switch box cover
3	Switch box

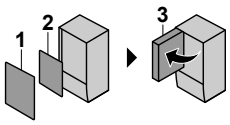

2 Connect the valve control cable to the appropriate terminals as shown in the illustration below.

NOTICE
Wiring is different for a NC (normally closed) valve and a NO (normally open) valve.

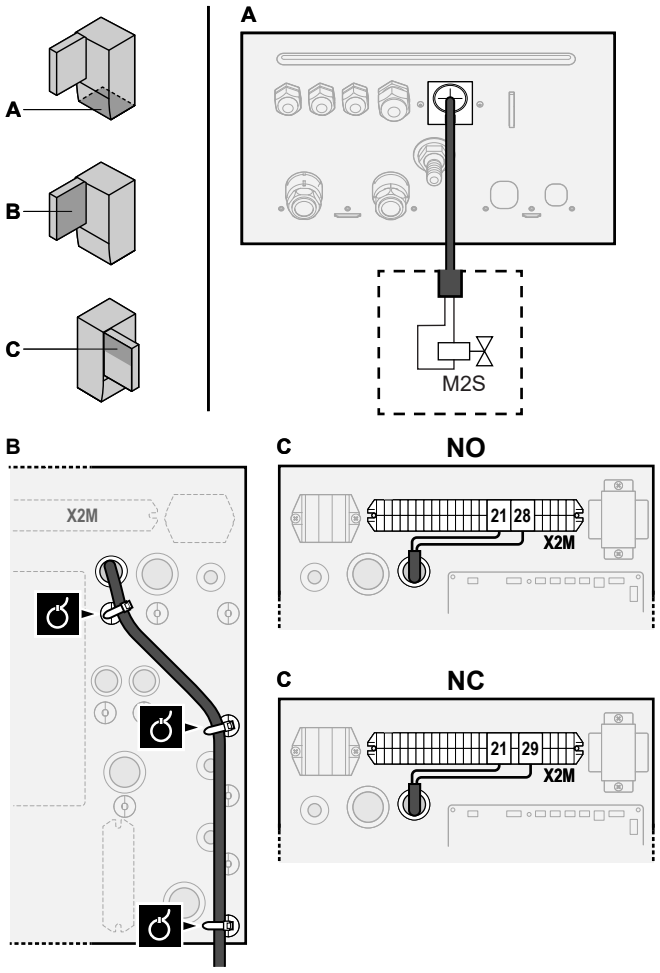

3 Fix the cable with cable ties to the cable tie mountings.

9.3.4 To connect the electricity meters

	Wires: 2 (per meter)×0.75 mm² Electricity meters: 12 V DC pulse detection (voltage supplied by PCB)
	[9.A] `Energy metering`

INFORMATION

In case of an electricity meter with transistor output, check the polarity. The positive polarity MUST be connected to X5M/6 and X5M/4; the negative polarity to X5M/5 and X5M/3.

1 Open the following (see "7.2.4 To open the indoor unit" [▶ 72]):

1	Front panel
2	Switch box cover
3	Switch box

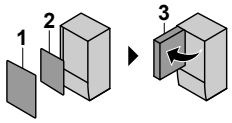

2 Connect the electricity meters cable to the appropriate terminals as shown in the illustration below.

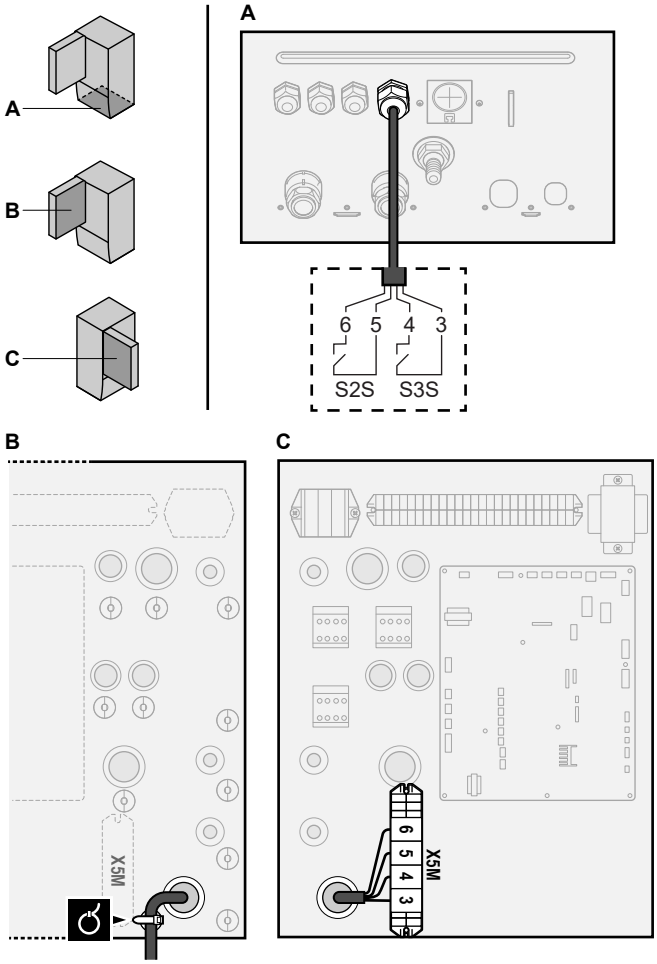

3 Fix the cable with cable ties to the cable tie mountings.

9.3.5 To connect the domestic hot water pump

	Wires: (2+GND)×0.75 mm² DHW pump output. Maximum load: 2 A (inrush), 230 V AC, 1 A (continuous)
	[9.2.2] `DHW pump` [9.2.3] `DHW pump schedule`

1 Open the following (see "7.2.4 To open the indoor unit" [▶ 72]):

1	Front panel	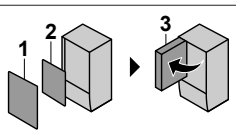
2	Switch box cover	
3	Switch box	

2 Connect the domestic hot water pump cable to the appropriate terminals as shown in the illustration below.

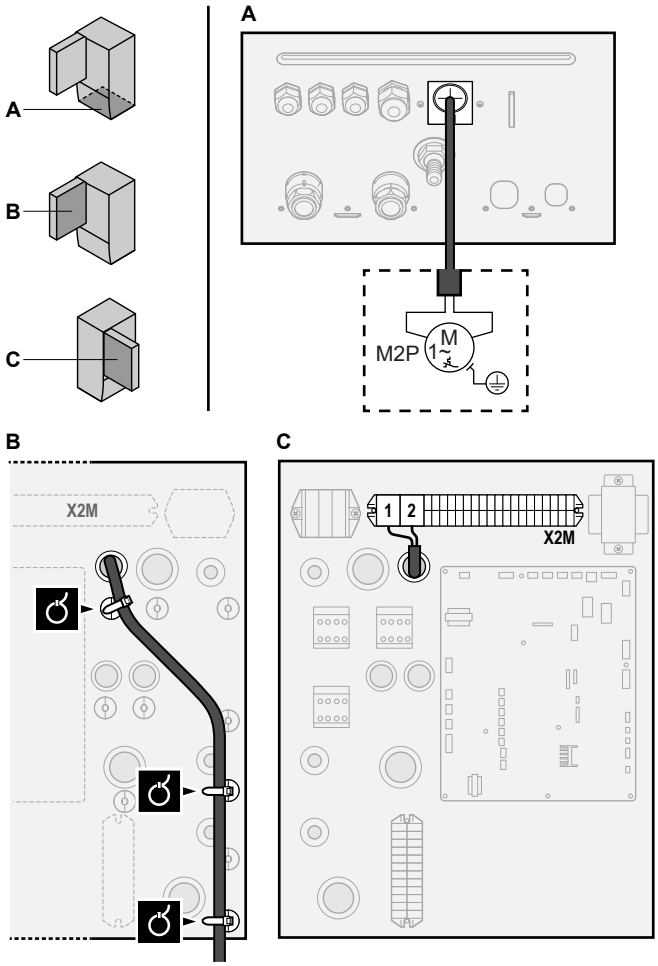

3 Fix the cable with cable ties to the cable tie mountings.

9.3.6 To connect the alarm output

	Wires: (2+1)×0.75 mm² Maximum load: 0.3 A, 250 V AC
	[9.D] `Alarm output`

1 Open the following (see "7.2.4 To open the indoor unit" [▶ 72]):

1	Front panel
2	Switch box cover
3	Switch box

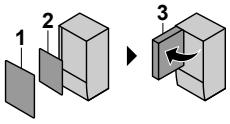

2 Connect the alarm output cable to the appropriate terminals as shown in the illustration below.

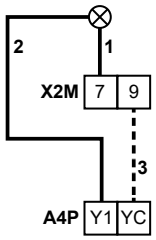	**1+2**	Wires connected to the alarm output
	3	Wire between X2M and A4P
	A4P	Installation of EKRP1HBAA is required.

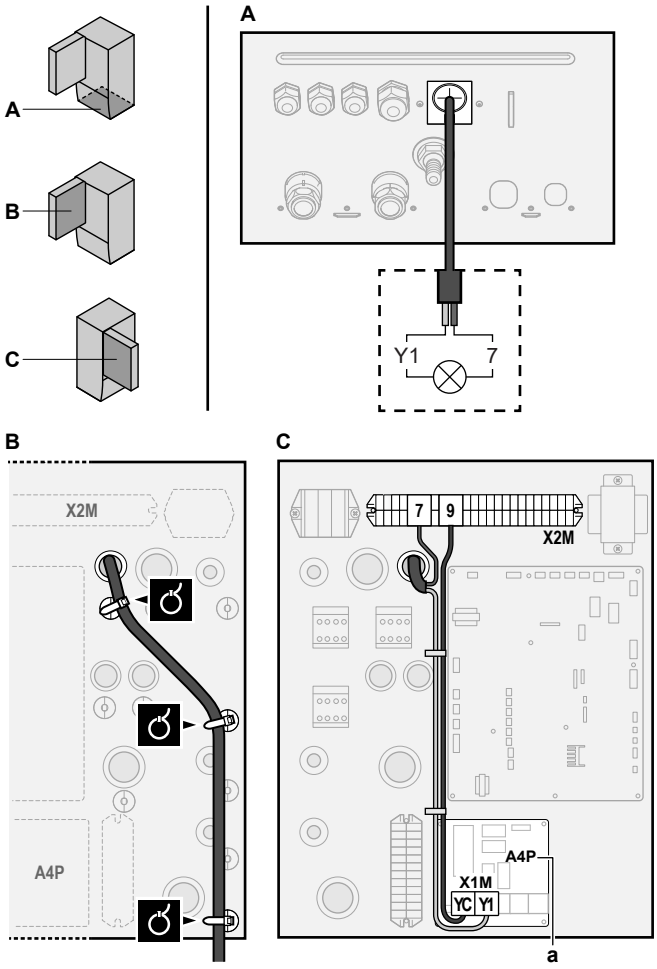

a Installation of EKRP1HBAA is required.

3 Fix the cable with cable ties to the cable tie mountings.

9.3.7 To connect the space cooling/heating ON/OFF output

INFORMATION

Cooling is only applicable in case of reversible models.

	Wires: (2+1)×0.75 mm² Maximum load: 0.3 A, 250 V AC
	—

1 Open the following (see "7.2.4 To open the indoor unit" [▸ 72]):

1	Front panel	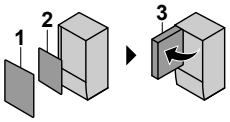
2	Switch box cover	
3	Switch box	

2 Connect the space cooling/heating ON/OFF output cable to the appropriate terminals as shown in the illustration below.

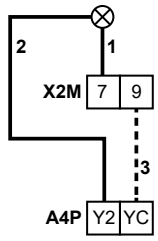	**1+2**	Wires connected to the space cooling/heating ON/OFF output
	3	Wire between X2M and A4P
	A4P	Installation of EKRP1HBAA is required.

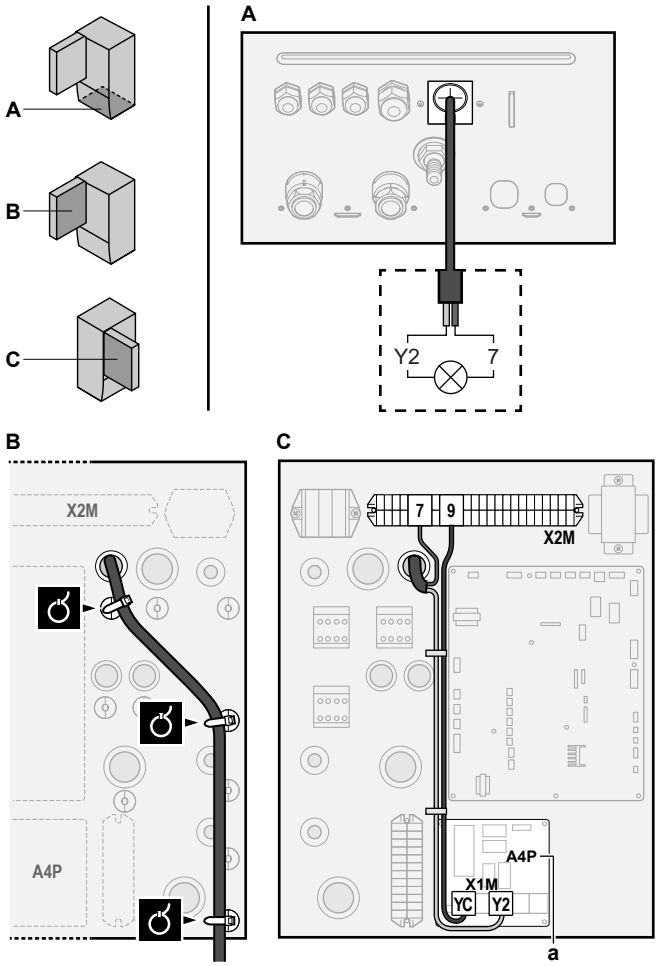

a Installation of EKRP1HBAA is required.

3 Fix the cable with cable ties to the cable tie mountings.

9.3.8 To connect the changeover to external heat source

INFORMATION

Bivalent is ONLY possible in case of ONE leaving water temperature zone with:

- room thermostat control, OR
- external room thermostat control.

	Wires: 2×0.75 mm² Maximum load: 0.3 A, 250 V AC Minimum load: 20 mA, 5 V DC
	[9.C] `Bivalent`

1 Open the following (see "7.2.4 To open the indoor unit" [▸ 72]):

1	Front panel
2	Switch box cover
3	Switch box

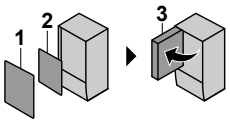

2 Connect the changeover to external heat source cable to the appropriate terminals as shown in the illustration below.

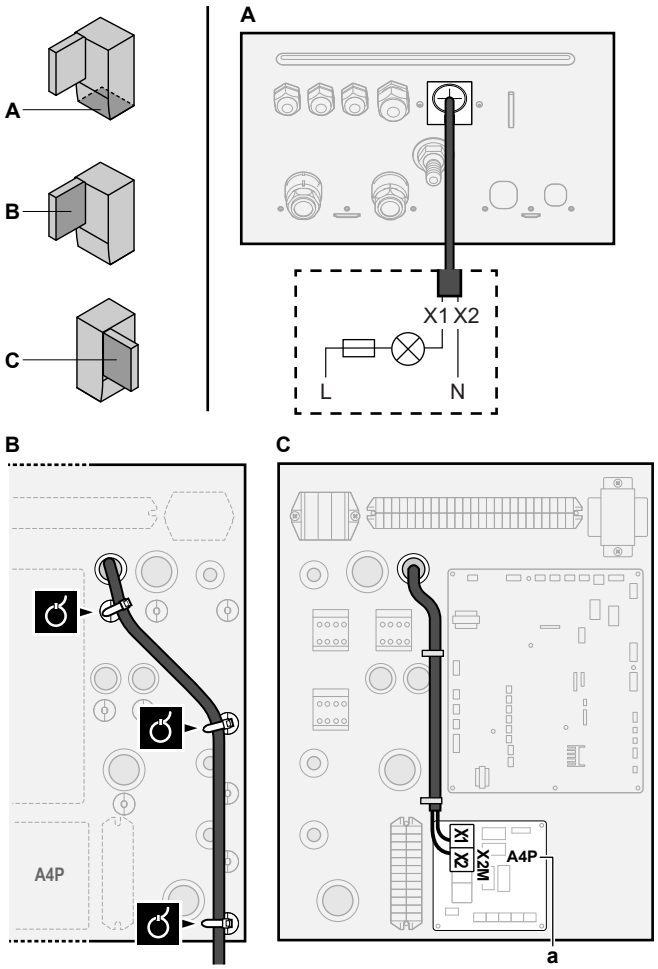

a Installation of EKRP1HBAA is required.

3 Fix the cable with cable ties to the cable tie mountings.

9.3.9 To connect the power consumption digital inputs

	Wires: 2 (per input signal)×0.75 mm² Power limitation digital inputs: 12 V DC / 12 mA detection (voltage supplied by PCB)
	[9.9] `Power consumption control`.

1 Open the following (see "7.2.4 To open the indoor unit" [▸ 72]):

1	Front panel
2	Switch box cover
3	Switch box

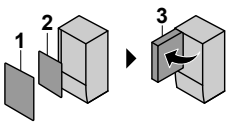

2 Connect the power consumption digital inputs cable to the appropriate terminals as shown in the illustration below.

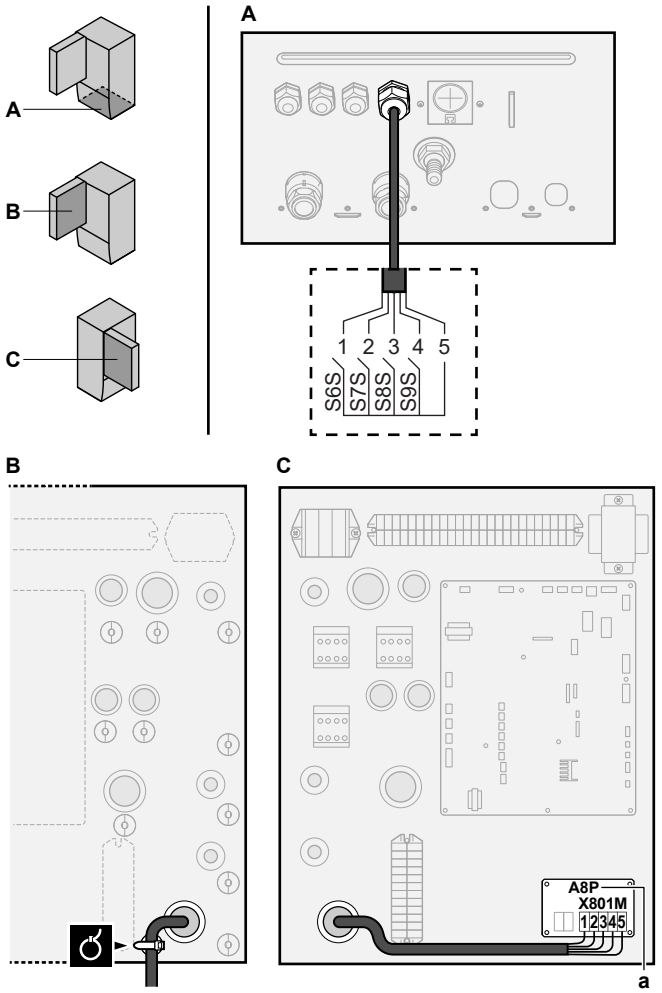

a Installation of EKRP1AHTA is required.

3 Fix the cable with cable ties to the cable tie mountings.

9.3.10 To connect the safety thermostat

Note: Safety thermostat = normally closed contact.

	Wires: 2×0.75 mm² Maximum length: 50 m Safety thermostat contact: 16 V DC detection (voltage supplied by PCB). The voltage-free contact shall ensure the minimum applicable load of 15 V DC, 10 mA.
	—

1 Open the following (see "7.2.4 To open the indoor unit" [▶ 72]):

1	Front panel
2	Switch box cover
3	Switch box

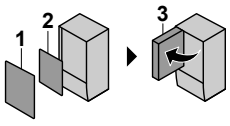

2 Connect the safety thermostat (normally closed) cable to the appropriate terminals as shown in the illustration below.

Note: The jumper wire (factory-mounted) must be removed from the respective terminals.

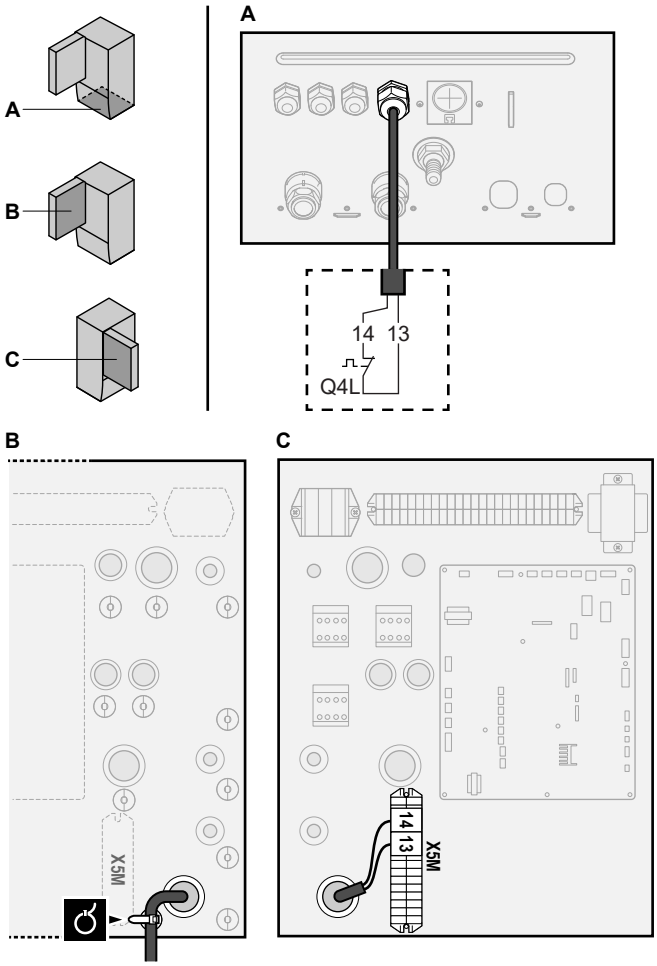

3 Fix the cable with cable ties to the cable tie mountings.

NOTICE

Make sure to select and install the safety thermostat according to the applicable legislation.

In any case, to prevent unnecessary tripping of the safety thermostat, we recommend the following:

- The safety thermostat is automatically resettable.
- The safety thermostat has a maximum temperature variation rate of 2°C/min.
- There is a minimum distance of 2 m between the safety thermostat and the motorized 3-way valve delivered with the domestic hot water tank.

NOTICE

Error. If you remove the jumper (open circuit) but do NOT connect the safety thermostat, stop error 8H-03 will occur.

9.3.11 Smart Grid

This topic describes 2 possible ways to connect the indoor unit to a Smart Grid:

- In case of low voltage Smart Grid contacts
- In case of high voltage Smart Grid contacts. This requires the installation of the Smart Grid relay kit (EKRELSG).

The 2 incoming Smart Grid contacts can activate the following Smart Grid modes:

❶	❷	SG ready 1.0 operation mode
0	0	Free running
0	1	Forced off
1	0	Recommended on
1	1	Forced on

❶	❷	SG ready 1.1 operation mode
0	1	Operating state 1
0	0	Operating state 2
1	0	Operating state 3

The use of a Smart Grid pulse meter is not mandatory:

If Smart Grid pulse meter is...	Then [9.8.8] Limit setting kW is...
Used ([9.A.2] Electricity meter 2 ≠ None)	Not applicable
Not used ([9.A.2] Electricity meter 2 = None)	Applicable

In case of low voltage Smart Grid contacts

	Wires (Smart Grid pulse meter): 0.5 mm² Wires (low voltage Smart Grid contacts): 0.5 mm²
	[9.8.4]=3 (Benefit kWh power supply = Smart Grid) [9.8.5] Smart Grid operation mode [9.8.6] Allow electrical heaters [9.8.7] Enable room buffering [9.8.8] Limit setting kW

The wiring of the Smart Grid in case of low voltage contacts is as follows:

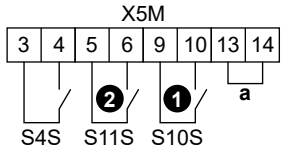

a Jumper (factory-mounted). If you also connect a safety thermostat (Q4L), replace the jumper with the safety thermostat wires.
S4S Smart Grid pulse meter
❶/S10S Low voltage Smart Grid contact 1
❷/S11S Low voltage Smart Grid contact 2

1 Connect the wiring as follows:

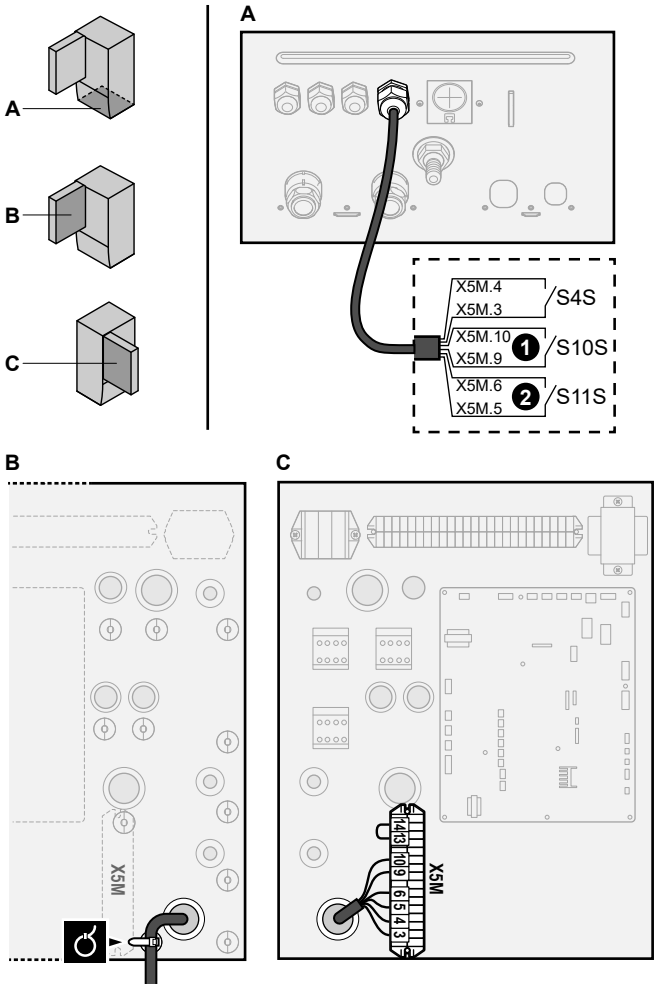

2 Fix the cables with cable ties to the cable tie mountings.

In case of high voltage Smart Grid contacts

	Wires (Smart Grid pulse meter): 0.5 mm² Wires (high voltage Smart Grid contacts): 1 mm²
	[9.8.4]=3 (`Benefit kWh power supply` = `Smart Grid`) [9.8.5] `Smart Grid operation mode` [9.8.6] `Allow electrical heaters` [9.8.7] `Enable room buffering` [9.8.8] `Limit setting kW`

The wiring of the Smart Grid in case of high voltage contacts is as follows:

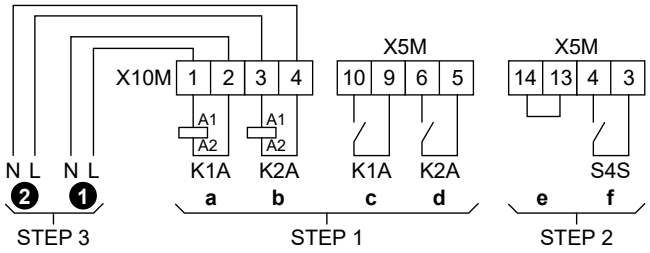

STEP 1 Smart Grid relay kit installation
STEP 2 Low voltage connections
STEP 3 High voltage connections
❶ High voltage Smart Grid contact 1

❷ High voltage Smart Grid contact 2
a, b Coil sides of relays
c, d Contact sides of relays
e Jumper (factory-mounted). If you also connect a safety thermostat (Q4L), replace the jumper with the safety thermostat wires.
f Smart Grid pulse meter

1 Install the components of the Smart Grid relay kit as follows:

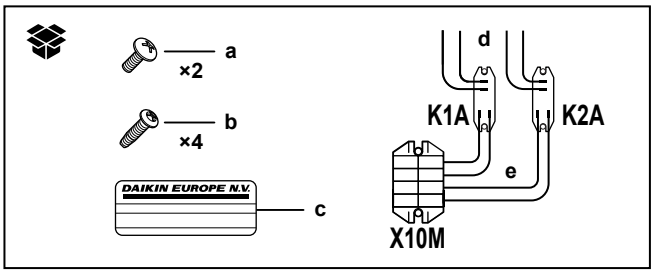

K1A, K2A Relays
X10M Terminal block
a Screws for X10M
b Screws for K1A and K2A
c Sticker to put on the high voltage wires
d Wires between the relays and X5M (AWG22 ORG)
e Wires between the relays and X10M (AWG18 RED)

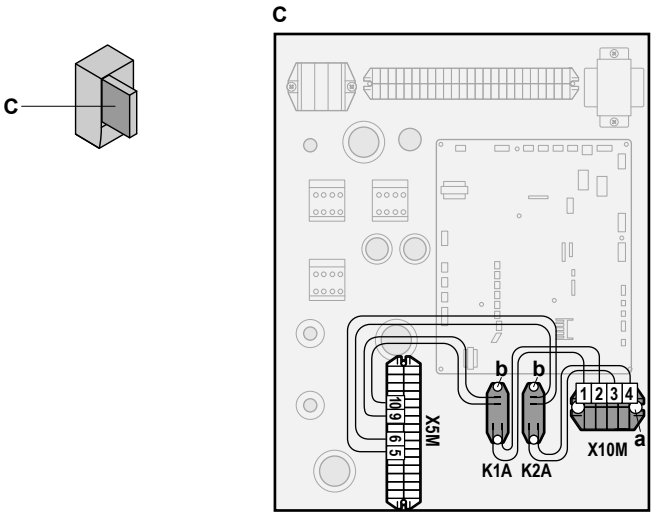

2 Connect the low voltage wiring as follows:

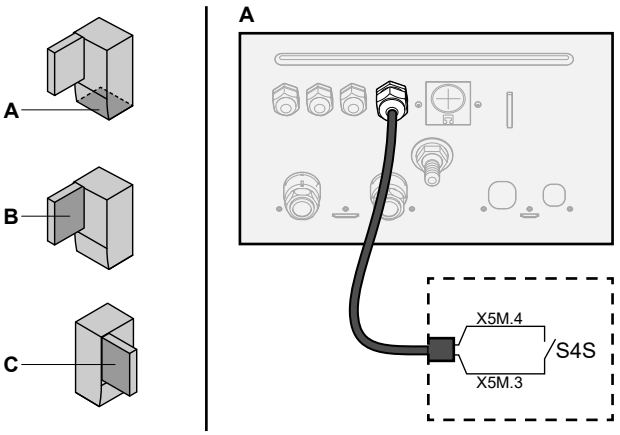

S4S Smart Grid pulse meter

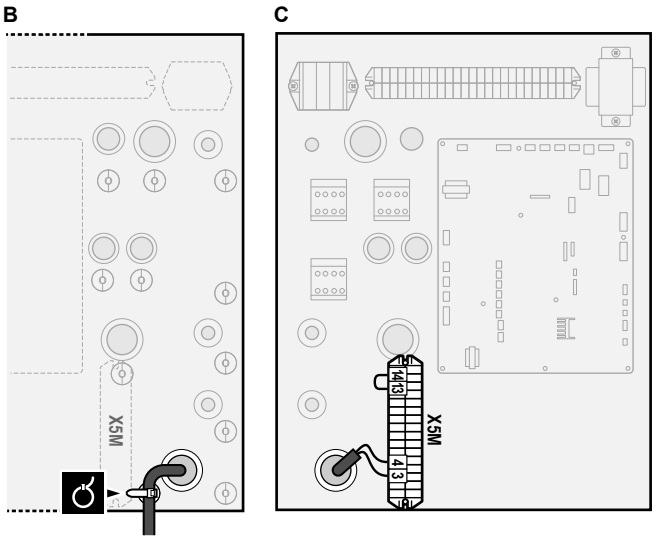

3 Connect the high voltage wiring as follows:

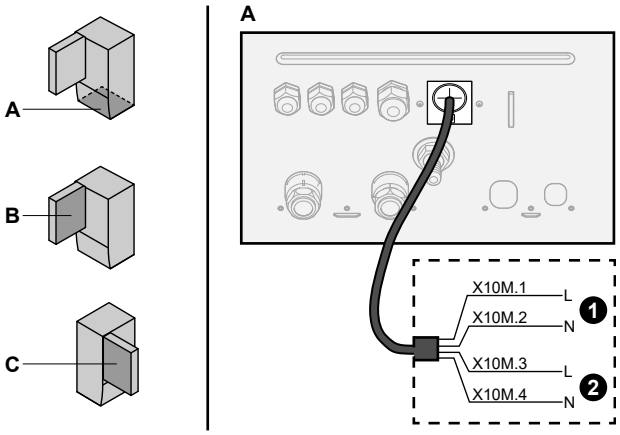

1 High voltage Smart Grid contact 1
2 High voltage Smart Grid contact 2

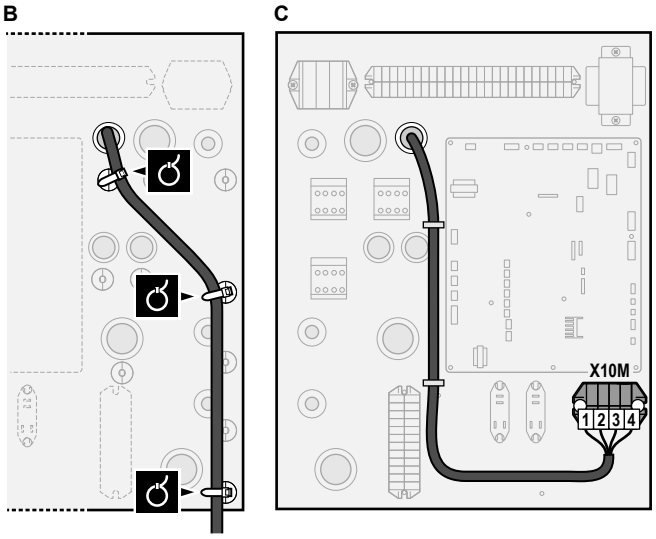

4 Fix the cables with cable ties to the cable tie mountings. If necessary, bundle excessive cable length with a cable tie.

9.3.12 To connect the WLAN cartridge (delivered as accessory)

	[D] `Wireless gateway`

1 Insert the WLAN cartridge into the cartridge slot on the user interface of the indoor unit.

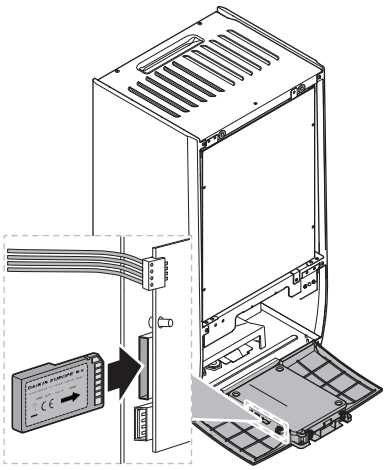

10 Configuration

INFORMATION

Cooling is only applicable in case of reversible models.

In this chapter

10.1 Overview: Configuration ... 135
10.1.1 To access the most used commands ... 136
10.1.2 To connect the PC cable to the switch box ... 138
10.2 Configuration wizard ... 139
10.3 Possible screens ... 140
10.3.1 Possible screens: Overview ... 140
10.3.2 Home screen ... 141
10.3.3 Main menu screen ... 143
10.3.4 Menu screen ... 144
10.3.5 Setpoint screen ... 144
10.3.6 Detailed screen with values ... 145
10.4 Preset values and schedules ... 146
10.4.1 Using preset values ... 146
10.4.2 Using and programming schedules ... 146
10.4.3 Schedule screen: Example ... 150
10.4.4 Setting the energy prices ... 154
10.5 Weather-dependent curve ... 156
10.5.1 What is a weather-dependent curve? ... 156
10.5.2 2-points curve ... 156
10.5.3 Slope-offset curve ... 157
10.5.4 Using weather-dependent curves ... 159
10.6 Settings menu ... 160
10.6.1 Malfunctioning ... 161
10.6.2 Room ... 161
10.6.3 Main zone ... 165
10.6.4 Additional zone ... 175
10.6.5 Space heating/cooling ... 180
10.6.6 Tank ... 189
10.6.7 User settings ... 197
10.6.8 Information ... 202
10.6.9 Installer settings ... 203
10.6.10 Commissioning ... 225
10.6.11 User profile ... 226
10.6.12 Operation ... 226
10.6.13 WLAN ... 226
10.7 Menu structure: Overview user settings ... 230
10.8 Menu structure: Overview installer settings ... 231

10.1 Overview: Configuration

This chapter describes what you have to do and know to configure the system after it is installed.

Why

If you do NOT configure the system correctly, it might NOT work as expected. The configuration influences the following:

- The calculations of the software
- What you can see on and do with the user interface

How

You can configure the system via the user interface.

- **First time – Configuration wizard.** When you turn ON the user interface for the first time (via the unit), the configuration wizard starts to help you configure the system.
- **Restart the configuration wizard.** If the system is already configured, you can restart the configuration wizard. To restart the configuration wizard, go to `Installer settings` > `Configuration wizard`. To access `Installer settings`, see "10.1.1 To access the most used commands" [▸ 136].
- **Afterwards.** If necessary, you can make changes to the configuration in the menu structure or the overview settings.

INFORMATION

When the configuration wizard is finished, the user interface will show an overview screen and request to confirm. When confirmed, the system will restart and the home screen will be displayed.

Accessing settings – Legend for tables

You can access the installer settings using two different methods. However, NOT all settings are accessible via both methods. If so, the corresponding table columns in this chapter are set to N/A (not applicable).

Method	Column in tables
Accessing settings via the breadcrumb in the **home menu screen** or the **menu structure**. To enable breadcrumbs, press the **?** button in the home screen.	**#** For example: [2.9]
Accessing settings via the code in the **overview field settings**.	**Code** For example: [C-07]

See also:

- "To access the installer settings" [▸ 137]
- "10.8 Menu structure: Overview installer settings" [▸ 231]

10.1.1 To access the most used commands

To change the user permission level

You can change the user permission level as follows:

1	Go to [B]: `User profile`. 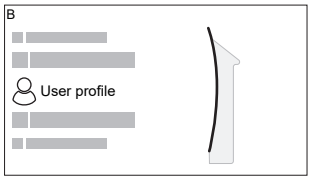	
2	Enter the applicable pin code for the user permission level.	—
	▪ Browse through the list of digits and change the selected digit.	
	▪ Confirm the digit to proceed to the next digit.	or
	▪ OR, move the cursor from left to right.	
	▪ Confirm the pin code and proceed.	

Installer pin code

The `Installer` pin code is **5678**. Additional menu items and installer settings are now available.



Advanced user pin code

The `Advanced user` pin code is **1234**. Additional menu items for the user are now visible.

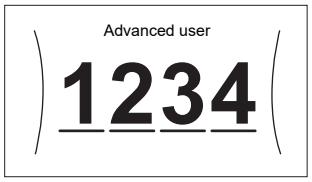

User pin code

The `User` pin code is **0000**.

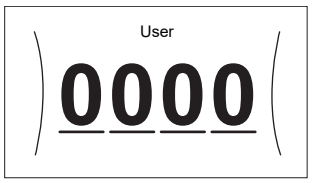

To access the installer settings

1. Set the user permission level to `Installer`.
2. Go to [9]: `Installer settings`.

To modify an overview setting

Example: Modify [1-01] from 15 to 20.

Most settings can be configured via the menu structure. If for any reason it is required to change a setting using the overview settings, then the overview settings can be accessed as follows:

1	Set the user permission level to `Installer`. See "To change the user permission level" [▶ 136].	—
2	Go to [9.I]: `Installer settings` > `Overview field settings`.	
3	Turn the left dial to select the first part of the setting and confirm by pressing the dial. 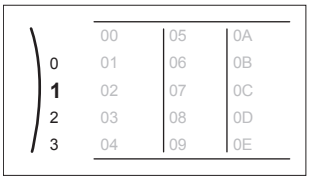	

4	Turn the left dial to select the second part of the setting 1: 00 01 **15** 02 03 04 / 05 06 07 08 09 / 0A 0B 0C 0D 0E	
5	Turn the right dial to modify the value from 15 to 20. 1: 00 01 **20** 02 03 04 / 05 06 07 08 09 / 0A 0B 0C 0D 0E	
6	Press the left dial to confirm the new setting.	
7	Press the center button to go back to the home screen.	

INFORMATION

When you change the overview settings and you go back to the home screen, the user interface will show a popup screen and request to restart the system.

When confirmed, the system will restart and recent changes will be applied.

10.1.2 To connect the PC cable to the switch box

This connection between PC and hydro PCB is needed when updating the hydro software and EEPROM.

Prerequisite: The EKPCCAB4 kit is required.

1. Connect the USB connector of the cable to your PC.
2. Connect the plug of the cable to X10A on A1P of the switch box of the indoor unit.

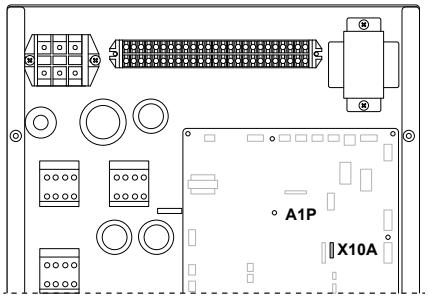

3. Pay special attention to the position of the plug!

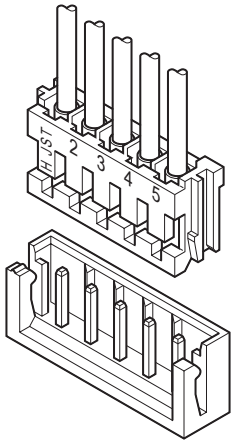

10.2 Configuration wizard

After first power ON of the system, the user interface starts a configuration wizard. Use this wizard to set the most important initial settings for the unit to run properly. If required, you can afterwards configure more settings. You can change all these settings via the menu structure.

You can find a short overview of the settings in the configuration here. All the settings can also be adjusted in the settings menu (use the breadcrumbs).

For the setting...		Refer to...
Language [7.1]		
Time/date [7.2]		
	Hours	—
	Minutes	
	Year	
	Month	
	Day	
System		
	Indoor unit type (read only)	"10.6.9 Installer settings" [▶ 203]
	Backup heater type [9.3.1]	
	Domestic hot water [9.2.1]	
	Emergency [9.5.1]	
	Number of zones [4.4]	"10.6.5 Space heating/ cooling" [▶ 180]
Backup heater		
	Voltage [9.3.2]	"Backup heater" [▶ 206]
	Configuration [9.3.3]	
	Capacity step 1 [9.3.4]	
	Additional capacity step 2 [9.3.5] (if applicable)	
Main zone		
	Emitter type [2.7]	"10.6.3 Main zone" [▶ 165]
	Control [2.9]	
	Setpoint mode [2.4]	
	Heating WD curve [2.5] (if applicable)	
	Cooling WD curve [2.6] (if applicable)	
	Schedule [2.1]	
Additional zone (only if [4.4]=1)		

For the setting...		Refer to...
	`Emitter type` [3.7]	"10.6.4 Additional zone" [▶ 175]
	`Control` (read only) [3.9]	
	`Setpoint mode` [3.4]	
	`Heating WD curve` [3.5] (if applicable)	
	`Cooling WD curve` [3.6] (if applicable)	
	`Schedule` [3.1]	
`Tank`		
	`Heat up mode` [5.6]	"10.6.6 Tank" [▶ 189]
	`Comfort setpoint` [5.2]	
	`Eco setpoint` [5.3]	
	`Reheat setpoint` [5.4]	

10.3 Possible screens

10.3.1 Possible screens: Overview

The most common screens are as follows:

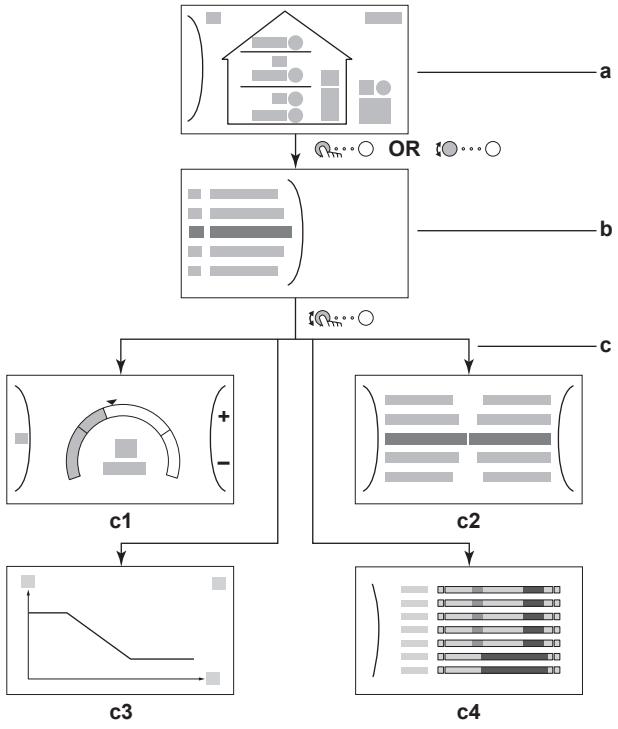

a Home screen
b Main menu screen
c Lower level screens:
c1: Setpoint screen
c2: Detailed screen with values
c3: Screen with weather-dependent curve
c4: Screen with schedule

10.3.2 Home screen

Press the ⌂ button to go back to the home screen. You see an overview of the unit configuration and the room and setpoint temperatures. Only symbols applicable for your configuration are visible on the home screen.

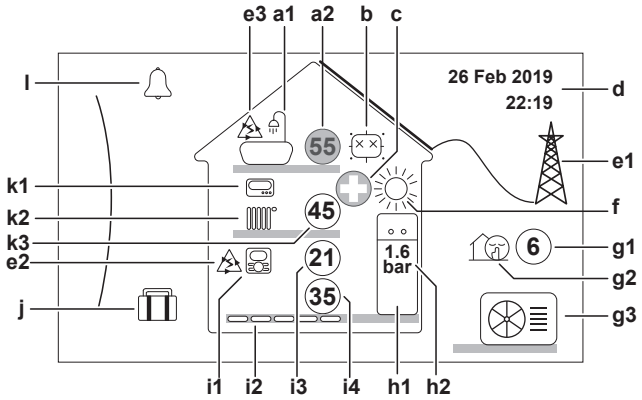

Possible actions on this screen	
	Go through the list of the main menu.
	Go to the main menu screen.
?	Enable/disable breadcrumbs.

Item			Description
a	**Domestic hot water**		
	a1		Domestic hot water
	a2	55	Measured tank temperature[(a)]
b	**Disinfection / Powerful**		
			Disinfection mode active
			Powerful operation mode active
c	**Emergency**		
			Heat pump failure and system operates in `Emergency` mode or heat pump is forced off.
d	**Current date and time**		
e	**Smart energy**		
	e1		Smart energy is available via solar panels or smart grid.
	e2		Smart energy is currently being used for space heating.
	e3		Smart energy is currently being used for domestic hot water.
f	**Space operation mode**		
			Cooling
			Heating
g	**Outdoor / quiet mode**		
	g1	6	Measured outdoor temperature[(a)]
	g2		Quiet mode active
	g3		Outdoor unit

Item			Description
h	**Indoor unit / domestic hot water tank**		
	h1		Floor-standing indoor unit with integrated tank
			Wall-mounted indoor unit
			Wall-mounted indoor unit with separated tank
	h2		Water pressure
i	**Main zone**		
	i1	Installed room thermostat type:	
			Unit operation is decided based on the ambient temperature of the dedicated Human Comfort Interface (BRC1HHDA used as room thermostat).
			Unit operation is decided by the external room thermostat (wired or wireless).
		—	No room thermostat installed or set. Unit operation is decided based on the leaving water temperature regardless of the actual room temperature and/or heating demand of the room.
	i2	Installed heat emitter type:	
			`Underfloor heating`
			`Fancoil unit`
			`Radiator`
	i3		Measured room temperature[(a)]
	i4		Leaving water temperature setpoint[(a)]
j	**Holiday mode**		
			Holiday mode active
k	**Additional zone**		
	k1	Installed room thermostat type:	
			Unit operation is decided by the external room thermostat (wired or wireless).
		—	No room thermostat installed or set. Unit operation is decided based on the leaving water temperature regardless of the actual room temperature and/or heating demand of the room.
	k2	Installed heat emitter type:	
			`Underfloor heating`
			`Fancoil unit`
			`Radiator`
	k3		Leaving water temperature setpoint[(a)]

Item		Description
I	**Malfunction**	
	🔔	A malfunction occurred.
	⚠	See "14.4.1 To display the help text in case of a malfunction" [▶ 255] for more information.

[a] If the corresponding operation (for example: space heating) is not active, the circle is greyed out.

10.3.3 Main menu screen

Starting from the home screen, press (···○) or turn (···○) the left dial to open the main menu screen. From the main menu, you can access the different setpoint screens and submenus.

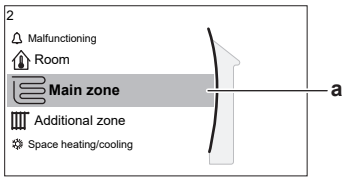

a Selected submenu

Possible actions on this screen	
···○	Go through the list.
···○	Enter the submenu.
?	Enable/disable breadcrumbs.

Submenu		Description
[0]	🔔 or ⚠ `Malfunctioning`	**Restriction:** Only displayed if a malfunction occurs. See "14.4.1 To display the help text in case of a malfunction" [▶ 255] for more information.
[1]	`Room`	**Restriction:** Only displayed if a dedicated Human Comfort Interface (BRC1HHDA used as room thermostat) is controlling the indoor unit. Set the room temperature.
[2]	`Main zone`	Shows the applicable symbol for your main zone emitter type. Set the leaving water temperature for the main zone.
[3]	`Additional zone`	**Restriction:** Only displayed if there are two leaving water temperature zones. Shows the applicable symbol for your additional zone emitter type. Set the leaving water temperature for the additional zone (if present).
[4]	`Space heating/ cooling`	Shows the applicable symbol of your unit. Put the unit in heating mode or cooling mode. You cannot change the mode on heating only models.

Submenu		Description
[5]	Tank	Set the domestic hot water tank temperature.
[7]	User settings	Gives access to user settings such as holiday mode and quiet mode.
[8]	Information	Displays data and information about the indoor unit.
[9]	Installer settings	**Restriction:** Only for the installer. Gives access to advanced settings.
[A]	Commissioning	**Restriction:** Only for the installer. Perform tests and maintenance.
[B]	User profile	Change the active user profile.
[C]	Operation	Turn heating/cooling functionality and domestic hot water preparation on or off.
[D]	Wireless gateway	**Restriction:** Only displayed if a wireless LAN (WLAN) is installed. Contains settings needed when configuring the ONECTA app.

10.3.4 Menu screen



Example:

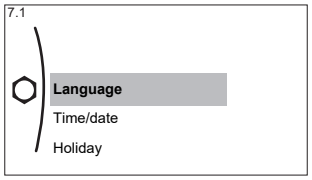

Possible actions on this screen	
	Go through the list.
	Enter the submenu/setting.

10.3.5 Setpoint screen

The setpoint screen is displayed for screens describing system components that need a setpoint value.

Examples

[1] Room temperature screen

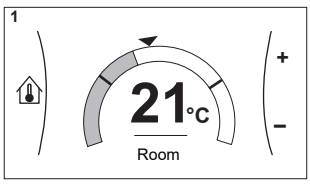

[2] Main zone screen

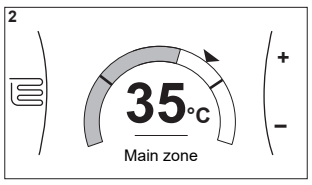

[3] Additional zone screen

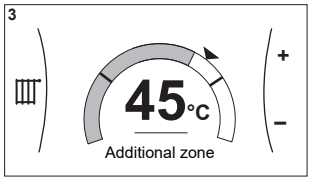

[5] Tank temperature screen

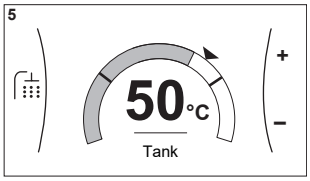

Explanation

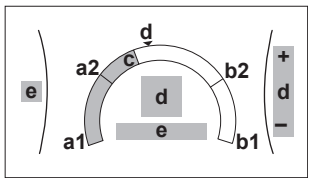

Possible actions on this screen	
○···●	Go through the list of the submenu.
○···●	Go to the submenu.
●···○	Adjust and automatically apply the desired temperature.

Item	Description	
Minimum temperature limit	**a1**	Fixed by the unit
	a2	Restricted by the installer
Maximum temperature limit	**b1**	Fixed by the unit
	b2	Restricted by the installer
Current temperature	**c**	Measured by the unit
Desired temperature	**d**	Turn the right dial to increase/ decrease.
Submenu	**e**	Turn or press the left dial to go to the submenu.

10.3.6 Detailed screen with values

Example:

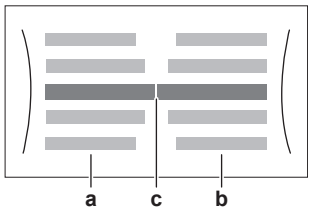

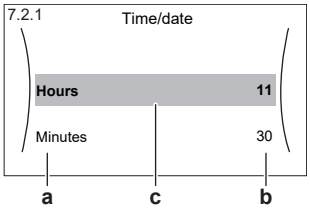

a Settings
b Values
c Selected setting and value

Possible actions on this screen	
○···●	Go through the list of settings.
●···○	Change the value.
○···●	Go to the next setting.
○···●	Confirm changes and proceed.

10.4 Preset values and schedules

10.4.1 Using preset values

About preset values

For some settings in the system, you can define preset values. You only need to set these values one time, then reuse the values in other screens such as the scheduling screen. If you later want to change the value, you only have to do it in one place.

Possible preset values

You can set the following user-defined preset values:

Preset value		Where used
Tank temperatures under [5] `Tank` **Restriction:** Only applicable if a DHW tank is present.	[5.2] `Comfort setpoint`	You can use these preset values in [5.5] `Schedule` (weekly schedule screen for the DHW tank) if the DHW tank mode is one of the following: ▪ `Schedule only` ▪ `Schedule + reheat`
	[5.3] `Eco setpoint`	
	[5.4] `Reheat setpoint`	The software uses this preset value if the DHW tank mode is `Schedule + reheat`.
Electricity prices under [7.5] `User settings` > `Electricity price` **Restriction:** Only applicable if `Bivalent` is enabled by the installer.	[7.5.1] `High`	You can use these preset values in [7.5.4] `Schedule` (weekly schedule screen for the energy prices). See "10.4.4 Setting the energy prices" [▸ 154].
	[7.5.2] `Medium`	
	[7.5.3] `Low`	

Additional to the user-defined preset values, the system also contains some system-defined preset values that you can use when programming schedules.

Example: In [7.4.2] `User settings` > `Quiet` > `Schedule` (weekly schedule for when the unit has to use which quiet mode level), you can use the following system-defined preset values: `Quiet`/`More quiet`/`Most quiet`.

10.4.2 Using and programming schedules

About schedules

Depending on your system layout and installer configuration, schedules for multiple controls may be available.

You can...	See...
Set if a specific control needs to act according to a schedule.	"**Activation screen**" in "Possible schedules" [▸ 147]
Select which schedule you currently want to use for a specific control. The system contains some predefined schedules. You can:	

	You can...	See...
	Consult which schedule is currently selected.	"**Schedule/Control**" in "Possible schedules" [▶ 147]
	Select another schedule if needed.	"To select which schedule you currently want to use" [▶ 147]
	Program your own schedules if the predefined schedules are not satisfactory. The actions you can program are control specific.	▪ "**Possible actions**" in "Possible schedules" [▶ 147] ▪ "10.4.3 Schedule screen: Example" [▶ 150]

To select which schedule you currently want to use

1	Go to the schedule for the specific control. See "**Schedule/Control**" in "Possible schedules" [▶ 147]. **Example:** For the schedule for the desired room temperature in heating mode, go to [1.2] `Room` > `Heating schedule`.	
2	Select the name of the current schedule. 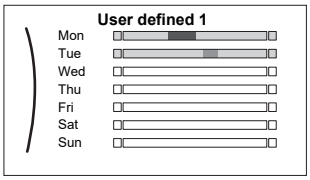	
3	Select `Select`. 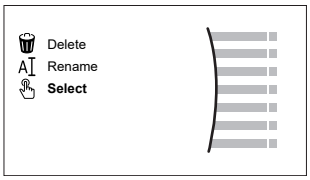	
4	Select the schedule that you currently want to use.	

Possible schedules

The table contains the following information:

- **Schedule/Control**: This column shows you where you can consult the currently selected schedule for the specific control. If needed, you can:
  - Select another schedule. See "To select which schedule you currently want to use" [▶ 147].
  - Program your own schedule. See "10.4.3 Schedule screen: Example" [▶ 150].
- **Predefined schedules**: Number of available predefined schedules in the system for the specific control. If needed, you can program your own schedule.
- **Activation screen**: For most controls, a schedule is only effective if it activated in its corresponding activation screen. This entry shows you where to activate it.
- **Possible actions**: Actions you can use when programming a schedule. For most schedules, you can program up to 6 actions per day.

Schedule/Control	Description
[1.2] `Room` > `Heating schedule` Schedule for the desired room temperature in heating mode.	**Predefined schedules:** 3 **Activation screen**: [1.1] `Schedule` **Possible actions**: Temperatures within range.

Schedule/Control	Description
[1.3] Room > Cooling schedule Schedule for the desired room temperature in cooling mode.	**Predefined schedules:** 1 **Activation screen**: [1.1] Schedule **Possible actions**: Temperatures within range.
[2.2] Main zone > Heating schedule Schedule for the desired leaving water temperature for the main zone in heating mode.	**Predefined schedules:** 3 **Activation screen**: [2.1] Schedule **Possible actions**: ▪ In case of weather-dependent: Shift temperatures within range. ▪ Otherwise: Temperatures within range
[2.3] Main zone > Cooling schedule Schedule for the desired leaving water temperature for the main zone in cooling mode.	**Predefined schedules:** 1 **Activation screen**: [2.1] Schedule **Possible actions**: ▪ In case of weather-dependent: Shift temperatures within range. ▪ Otherwise: Temperatures within range
[3.2] Additional zone > Heating schedule Schedule for when the system is allowed to heat up the additional zone in heating mode.	**Predefined schedules:** 1 **Activation screen**: [3.1] Schedule **Possible actions**: ▪ Off: When the system is NOT allowed to heat up the additional zone. ▪ On: When the system is allowed to heat up the additional zone.
[3.3] Additional zone > Cooling schedule Schedule for when the system is allowed to cool down the additional zone in cooling mode.	**Predefined schedules:** 1 **Activation screen**: [3.1] Schedule **Possible actions**: ▪ Off: When the system is NOT allowed to cool down the additional zone. ▪ On: When the system is allowed to cool down the additional zone.
[4.2] Space heating/cooling > Operation mode schedule Schedule (per month) for when to operate the unit in heating mode and when in cooling mode.	See "To set the space operation mode" [▶ 181].

Schedule/Control	Description
[5.5] Tank > Schedule Schedule for the domestic hot water tank temperature for your normal domestic hot water needs.	**Predefined schedules:** 1 **Activation screen**: Not applicable. This schedule is automatically activated if the DHW mode is one of the following: ▪ Schedule only ▪ Schedule + reheat **Possible actions**: ▪ Comfort: When to start heating the tank to the user-defined preset value [5.2] Comfort setpoint. ▪ Eco: When to start heating the tank to the user-defined preset value [5.3] Eco setpoint. ▪ Stop: When to stop heating the tank, even if the desired tank temperature is not reached yet. **Note:** In Schedule + reheat mode, the system also takes the user-defined preset value [5.4] Reheat setpoint into account.
[7.4.2] User settings > Quiet > Schedule Schedule for when the unit has to use which quiet mode level.	**Predefined schedules:** 1 **Activation screen**: [7.4.1] Activation (only available to installers). **Possible actions**: You can use the following system-defined preset values: ▪ Off ▪ Quiet ▪ More quiet ▪ Most quiet See "About quiet mode" [▸ 198].
[7.5.4] User settings > Electricity price > Schedule Schedule for when a certain electricity tariff is valid.	**Predefined schedules:** 1 **Activation screen**: Not applicable **Possible actions**: You can use the following system-defined preset values: ▪ High ▪ Medium ▪ Low See "10.4.4 Setting the energy prices" [▸ 154].
Restriction: Only available to installers. [9.4.2] Installer settings > Booster heater > BSH allowance schedule	**Predefined schedules:** 1 **Activation screen**: Not applicable **Possible actions**: You can program 2 actions per day. ▪ Off: Booster heater operation NOT allowed. ▪ On: Booster heater operation allowed.

10.4.3 Schedule screen: Example

This example shows how to set a room temperature schedule in heating mode for the main zone.

> **INFORMATION**
> The procedures to program other schedules are similar.

To program the schedule: overview

Example: You want to program the following schedule:

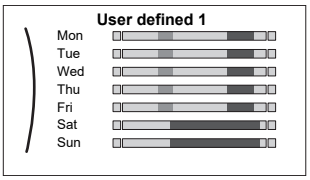

Prerequisite: The room temperature schedule is only available if room thermostat control is active. If leaving water temperature control is active, you can program the main zone schedule instead.

1. Go to the schedule.
2. (optional) Clear the content of the whole week schedule or the content of a selected day schedule.
3. Program the schedule for `Monday`.
4. Copy the schedule to the other weekdays.
5. Program the schedule for `Saturday` and copy it to `Sunday`.
6. Give the schedule a name.

To go to the schedule

1	Go to [1.1]: `Room` > `Schedule`.	
2	Set scheduling to `Yes`.	
3	Go to [1.2]: `Room` > `Heating schedule`.	

To clear the content of the week schedule

1	Select the name of the current schedule. 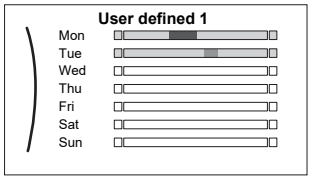	
2	Select `Delete`. 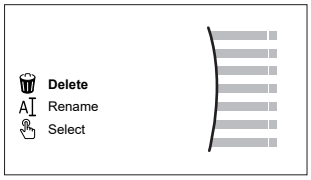	
3	Select `OK` to confirm.	

To clear the content of a day schedule

1	Select the day of which you want to clear the content. For example `Friday` 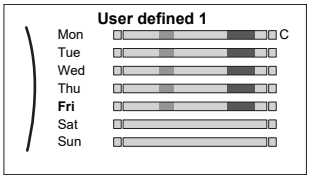	
2	Select `Delete`. 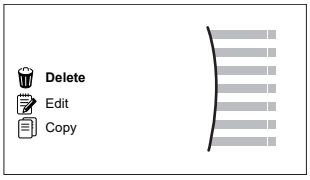	
3	Select `OK` to confirm.	

To program the schedule for Monday

1	Select `Monday`. 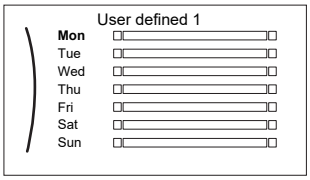	
2	Select `Edit`. 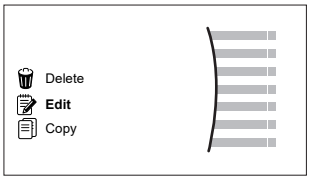	
3	Use the left dial to select an entry and edit the entry with the right dial. You can program up to 6 actions each day. On the bar, a high temperature has a darker colour than a low temperature. 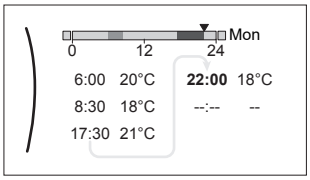 **Note:** To clear an action, set its time as the time of the previous action.	
4	Confirm the changes. **Result:** The schedule for Monday is defined. The value of the last action is valid until the next programmed action. In this example, Monday is the first day you programmed. Thus, the last programmed action is valid up to the first action of next Monday.	

To copy the schedule to the other weekdays

1	Select `Monday`. 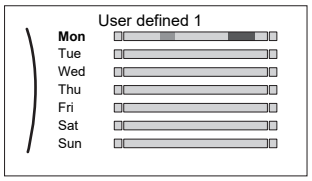	
2	Select `Copy`. 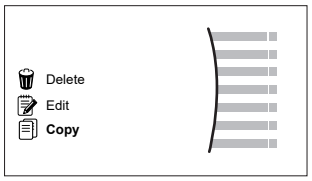 **Result:** Next to the copied day, "C" is displayed.	
3	Select `Tuesday`. 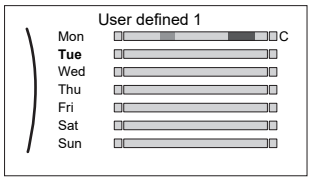	
4	Select `Paste`. 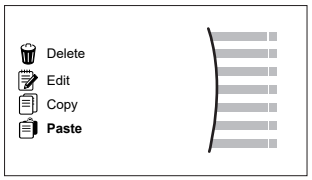 **Result:** 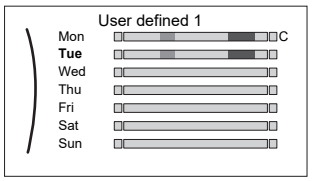	
5	Repeat this action for all other weekdays. 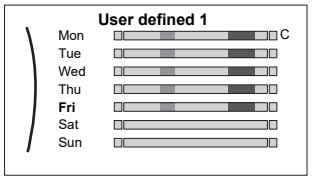	—

To program the schedule for Saturday and copy it to Sunday

1	Select `Saturday`.	
2	Select `Edit`.	

3	Use the left dial to select an entry and edit the entry with the right dial. 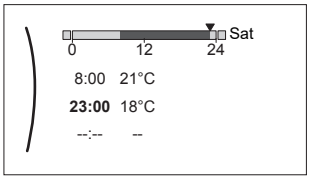	
4	Confirm the changes.	
5	Select `Saturday`.	
6	Select `Copy`.	
7	Select `Sunday`.	
8	Select `Paste`. **Result:** 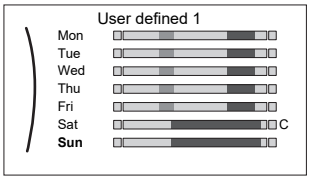	

To rename the schedule

1	Select the name of the current schedule. 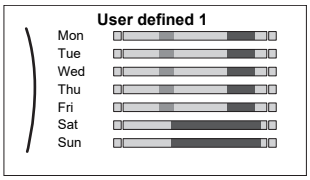	
2	Select `Rename`. 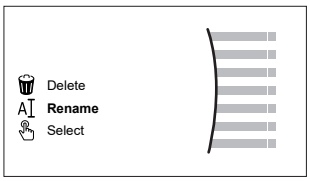	
3	(optional) To delete the current schedule name, browse through the character list until ← is displayed, then press to remove the previous character. Repeat for each character of the schedule name.	
4	To name the current schedule, browse through the character list and confirm the selected character. The schedule name can contain up to 15 characters.	
5	Confirm the new name.	

INFORMATION

Not all schedules can be renamed.

Usage example: You work in a 3-shift system

If you work in a 3-shift system, you can do the following:

1 Program 3 room temperature schedules and give them appropriate names. **Example:** EarlyShift, DayShift and LateShift

2 Select the schedule that you currently want to use.

10.4.4 Setting the energy prices

In the system, you can set the following energy prices:

- a fixed gas price
- three electricity price levels
- a weekly schedule timer for electricity prices.

Example: How to set the energy prices on the user interface?

Price	Value in breadcrumb
Gas: 5.3 euro cents/kWh	[7.6]=5.3
Electricity: 12 euro cents/kWh	[7.5.1]=12

To set the gas price

1	Go to [7.6]: `User settings` > `Gas price`.	
2	Select the correct gas price.	
3	Confirm the changes.	

INFORMATION

Price value ranging from 0.00~990 valuta/kWh (with 2 significant values).

To set the electricity price

1	Go to [7.5.1]/[7.5.2]/[7.5.3]: `User settings` > `Electricity price` > `High`/`Medium`/`Low`.	
2	Select the correct electricity price.	
3	Confirm the changes.	
4	Repeat this for all three electricity prices.	—

INFORMATION

Price value ranging from 0.00~990 valuta/kWh (with 2 significant values).

INFORMATION

If no schedule is set, the `Electricity price` for `High` is taken into account.

To set the electricity price schedule

1	Go to [7.5.4]: `User settings` > `Electricity price` > `Schedule`.	
2	Program the selection using the scheduling screen. You can set the `High`, `Medium` and `Low` electricity prices according to your electricity supplier.	—
3	Confirm the changes.	

INFORMATION

The values correspond with the electricity price values for `High`, `Medium` and `Low` previously set. If no schedule is set, the electricity price for `High` is taken into account.

About energy prices in case of an incentive per kWh renewable energy

An incentive can be taken into account when setting the energy prices. Although the running cost can increase, the total operation cost, taking into account the reimbursement will be optimized.

NOTICE

Make sure to modify the setting of the energy prices at the end of the incentive period.

To set the gas price in case of an incentive per kWh renewable energy

Calculate the value for the gas price with the following formula:

- Actual gas price+(Incentive/kWh×0.9)

For the procedure to set the gas price, see "To set the gas price" [▸ 154].

To set the electricity price in case of an incentive per kWh renewable energy

Calculate the value for the electricity price with following formula:

- Actual electricity price+Incentive/kWh

For the procedure to set the electricity price, see "To set the electricity price" [▸ 154].

Example

This is an example and the prices and/or values used in this example are NOT accurate.

Data	Price/kWh
Gas price	4.08
Electricity price	12.49
Renewable heat incentive per kWh	5

Calculation of the gas price

Gas price=Actual gas price+(Incentive/kWh×0.9)

Gas price=4.08+(5×0.9)

Gas price=8.58

Calculation of the electricity price

Electricity price=Actual electricity price+Incentive/kWh

Electricity price=12.49+5

Electricity price=17.49

Price	Value in breadcrumb
Gas: 4.08 /kWh	[7.6]=8.6
Electricity: 12.49 /kWh	[7.5.1]=17

10.5 Weather-dependent curve

10.5.1 What is a weather-dependent curve?

Weather-dependent operation

The unit operates 'weather-dependent' if the desired leaving water or tank temperature is determined automatically by the outdoor temperature. It therefore is connected to a temperature sensor on the north wall of the building. If the outdoor temperature drops or rises, the unit compensates instantly. Thus, the unit does not have to wait for feedback by the thermostat to increase or decrease the temperature of the leaving water or tank. Because it reacts more quickly, it prevents high rises and drops of the indoor temperature and water temperature at tap points.

Advantage

Weather-dependent operation reduces energy consumption.

Weather-dependent curve

To be able to compensate for differences in temperature, the unit relies on its weather-dependent curve. This curve defines how much the temperature of the tank or leaving water must be at different outdoor temperatures. Because the slope of the curve depends on local circumstances such as climate and the insulation of the building, the curve can be adjusted by an installer or user.

Types of weather-dependent curve

There are two types of weather-dependent curves:

- 2-points curve
- Slope-offset curve

Which type of curve you use to make adjustments, depends on your personal preference. See "10.5.4 Using weather-dependent curves" [▸ 159].

Availability

The weather-dependent curve is available for:

- Main zone - Heating
- Main zone - Cooling
- Additional zone - Heating
- Additional zone - Cooling
- Tank (only available to installers)

INFORMATION

To operate weather-dependent, correctly configure the setpoint of the main zone, additional zone or tank. See "10.5.4 Using weather-dependent curves" [▸ 159].

10.5.2 2-points curve

Define the weather-dependent curve with these two setpoints:

- Setpoint (X1, Y2)
- Setpoint (X2, Y1)

Example

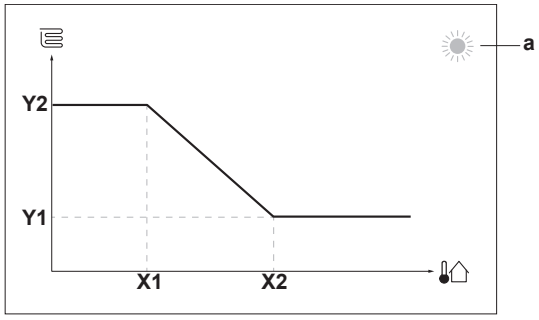

Item	Description
a	Selected weather-dependent zone: ▪ : Main zone or additional zone heating ▪ : Main zone or additional zone cooling ▪ : Domestic hot water
X1, X2	Examples of outdoor ambient temperature
Y1, Y2	Examples of desired tank temperature or leaving water temperature. The icon corresponds to the heat emitter for that zone: ▪ : Underfloor heating ▪ : Fan coil unit ▪ : Radiator ▪ : Domestic hot water tank

Possible actions on this screen	
	Go through the temperatures.
	Change the temperature.
	Go to the next temperature.
	Confirm changes and proceed.

10.5.3 Slope-offset curve

Slope and offset

Define the weather-dependent curve by its slope and offset:

- Change the **slope** to differently increase or decrease the temperature of the leaving water for different ambient temperatures. For example, if leaving water temperature is in general fine but at low ambient temperatures too cold, raise the slope so that leaving water temperature is heated increasingly more at decreasingly lower ambient temperatures.
- Change the **offset** to equally increase or decrease the temperature of the leaving water for different ambient temperatures. For example, if leaving water temperature is always a bit too cold at different ambient temperatures, shift the offset up to equally increase the leaving water temperature for all ambient temperatures.

Examples

Weather-dependent curve when slope is selected:

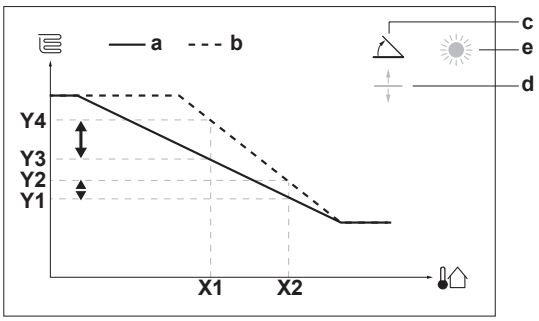

Weather-dependent curve when offset is selected:

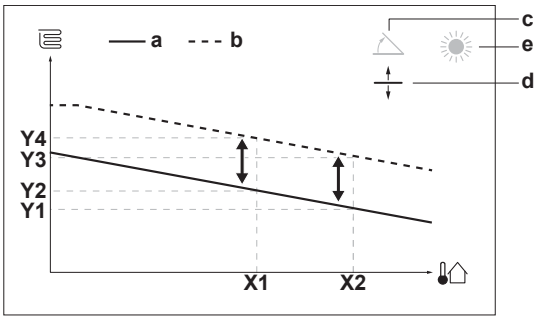

Item	Description
a	WD curve before changes.
b	WD curve after changes (as example): ▪ When slope is changed, the new preferred temperature at X1 is unequally higher than the preferred temperature at X2. ▪ When offset is changed, the new preferred temperature at X1 is equally higher as the preferred temperature at X2.
c	Slope
d	Offset
e	Selected weather-dependent zone: ▪ : Main zone or additional zone heating ▪ : Main zone or additional zone cooling ▪ : Domestic hot water
X1, X2	Examples of outdoor ambient temperature
Y1, Y2, Y3, Y4	Examples of desired tank temperature or leaving water temperature. The icon corresponds to the heat emitter for that zone: ▪ : Underfloor heating ▪ : Fan coil unit ▪ : Radiator ▪ : Domestic hot water tank

Possible actions on this screen	
	Select slope or offset.
	Increase or decrease the slope/offset.
	When slope is selected: set slope and go to offset. When offset is selected: set offset.

Possible actions on this screen	
	Confirm changes and return to the submenu.

10.5.4 Using weather-dependent curves

Configure weather-dependent curves as following:

To define the setpoint mode

To use the weather-dependent curve, you need to define the correct setpoint mode:

Go to setpoint mode …	Set the setpoint mode to …
Main zone – Heating	
[2.4] `Main zone` > `Setpoint mode`	`WD heating, fixed cooling` OR `Weather dependent`
Main zone – Cooling	
[2.4] `Main zone` > `Setpoint mode`	`Weather dependent`
Additional zone – Heating	
[3.4] `Additional zone` > `Setpoint mode`	`WD heating, fixed cooling` OR `Weather dependent`
Additional zone – Cooling	
[3.4] `Additional zone` > `Setpoint mode`	`Weather dependent`
Tank	
[5.B] `Tank` > `Setpoint mode`	**Restriction:** Only available to installers. `Weather dependent`

To change the type of weather-dependent curve

To change the type for all zones (main + additional) and for the tank, go to [2.E] `Main zone` > `WD curve type`.

Viewing which type is selected is also possible via:

- [3.C] `Additional zone` > `WD curve type`
- [5.E] `Tank` > `WD curve type`

  Restriction: Only available to installers.

To change the weather-dependent curve

Zone	Go to …
Main zone – Heating	[2.5] `Main zone` > `Heating WD curve`
Main zone – Cooling	[2.6] `Main zone` > `Cooling WD curve`
Additional zone – Heating	[3.5] `Additional zone` > `Heating WD curve`
Additional zone – Cooling	[3.6] `Additional zone` > `Cooling WD curve`
Tank	**Restriction:** Only available to installers. [5.C] `Tank` > `WD curve`

INFORMATION

Maximum and minimum setpoints

You cannot configure the curve with temperatures that are higher or lower than the set maximum and minimum setpoints for that zone or for the tank. When the maximum or minimum setpoint is reached, the curve flattens out.

To fine-tune the weather-dependent curve: slope-offset curve

The following table describes how to fine-tune the weather-dependent curve of a zone or tank:

You feel ...		Fine-tune with slope and offset:	
At regular outdoor temperatures ...	**At cold outdoor temperatures ...**	**Slope**	**Offset**
OK	Cold	↑	—
OK	Hot	↓	—
Cold	OK	↓	↑
Cold	Cold	—	↑
Cold	Hot	↓	↑
Hot	OK	↑	↓
Hot	Cold	↑	↓
Hot	Hot	—	↓

To fine-tune the weather-dependent curve: 2-points curve

The following table describes how to fine-tune the weather-dependent curve of a zone or tank:

You feel ...		Fine-tune with setpoints:			
At regular outdoor temperatures ...	**At cold outdoor temperatures ...**	**Y2[(a)]**	**Y1[(a)]**	**X1[(a)]**	**X2[(a)]**
OK	Cold	↑	—	↑	—
OK	Hot	↓	—	↓	—
Cold	OK	—	↑	—	↑
Cold	Cold	↑	↑	↑	↑
Cold	Hot	↓	↑	↓	↑
Hot	OK	—	↓	—	↓
Hot	Cold	↑	↓	↑	↓
Hot	Hot	↓	↓	↓	↓

[(a)] See "10.5.2 2-points curve" [▸ 156].

10.6 Settings menu

You can set additional settings using the main menu screen and its submenus. The most important settings are presented here.

10.6.1 Malfunctioning

In case of a malfunction, 🔔 or ⚠ will appear on the home screen. To display the error code, open the menu screen and go to [0] **Malfunctioning**. Press **?** for more information about the error.

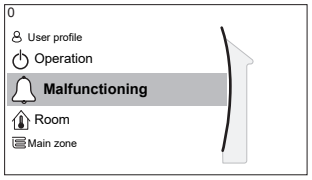

[0] Malfunctioning

10.6.2 Room

Overview

The following items are listed in the submenu:

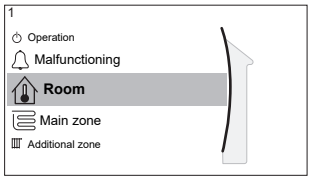

[1] Room

Setpoint screen

[1.1] Schedule

[1.2] Heating schedule

[1.3] Cooling schedule

[1.4] Antifrost

[1.5] Setpoint range

[1.6] Room sensor offset

[1.7] Room sensor offset

[1.9] Room comfort setpoint

Setpoint screen

Control the room temperature of the main zone via setpoint screen [1] **Room**.

See "10.3.5 Setpoint screen" [▸ 144].

Schedule

Indicate if the room temperature is controlled according to a schedule or not.

#	Code	Description
[1.1]	N/A	**Schedule**: ▪ **No**: Room temperature is directly controlled by the user. ▪ **Yes**: Room temperature is controlled by a schedule and can be modified by the user.

Heating schedule

Applicable for all models.

Define a heating schedule of the room temperature in [1.2] **Heating schedule** .

See "10.4.3 Schedule screen: Example" [▸ 150].

Cooling schedule

Only applicable for reversible models.

Define a cooling schedule of the room temperature in [1.3] **Cooling schedule**.

See "10.4.3 Schedule screen: Example" [▸ 150].

Antifrost

[1.4] `Antifrost` prevents the room from getting too cold. This setting is applicable when [2.9] `Control`=`Room thermostat`, but also offers functionality for leaving water temperature control and external room thermostat control. In case of the latter two, `Antifrost` can be activated by setting field setting [2-06]=1.

Room frost protection, when enabled, is not guaranteed when there is no room thermostat that can activate the heat pump. This is the case when:

- [2.9] `Control`=`External room thermostat` and [C.2] `Space heating/cooling`=`Off`, or if
- [2.9] `Control`=`Leaving water`.

In the above cases, `Antifrost` will heat the space heating water to a reduced setpoint when the outdoor temperature is lower than 4°C.

Main zone unit control method [2.9]	Description
Leaving water temperature control ([C-07]=0)	Room frost protection is NOT guaranteed.
External room thermostat control ([C-07]=1)	Allow for the external room thermostat to take care of room frost protection: ▪ Set [C.2] `Space heating/cooling`=`On`.
Room thermostat control ([C-07]=2)	Allow for the user interface used as room thermostat to take care of room frost protection: ▪ Set antifrost [1.4.1] `Activation`=`Yes`. ▪ Set the temperature of the antifrost function in [1.4.2] `Room setpoint`.

INFORMATION

If a U4 error occurs, room frost protection is NOT guaranteed.

NOTICE

If the room `Antifrost` setting is active and a U4 error occurs, the unit will automatically start the `Antifrost` function via the backup heater. If the backup heater is not allowed for room frost protection during a U4 error, the room `Antifrost` setting MUST be disabled.

NOTICE

Room frost protection. Even if you turn OFF space heating/cooling operation ([C.2]: `Operation` > `Space heating/cooling`), room frost protection operation –if enabled– can still activate. However, for leaving water temperature control and external room thermostat control, the protection is NOT guaranteed.

For more detailed information about room frost protection in relation to the applicable unit control method, see the sections below.

Leaving water temperature control ([C-07]=0)

Under leaving water temperature control, room frost protection is NOT guaranteed. However, if room antifrost [1.4] is activated, limited frost protection by the unit is possible:

If...	Then...
`Space heating/cooling` is OFF and the outdoor ambient temperature drops below 4°C	The unit will supply leaving water to the heat emitters to heat up the room again, and the leaving water temperature setpoint will be lowered.
`Space heating/cooling` is ON and the operation mode is "heating"	The unit will supply leaving water to the heat emitters to heat up the room according to normal logic.
`Space heating/cooling` is ON and the operation mode is "cooling"	There is no room frost protection.

External room thermostat control ([C-07]=1)

Under external room thermostat control, room frost protection is guaranteed by the external room thermostat, provided that:

- [C.2] `Space heating/cooling`=`On`, and
- [9.5.1] `Emergency`=`Automatic` or `auto SH normal/DHW off`.

However, if [1.4.1] `Antifrost` is activated, limited frost protection by the unit is possible.

In case of one leaving water temperature zone:

If...	Then...
`Space heating/cooling` is OFF and the outdoor ambient temperature drops below 4°C	The unit will supply leaving water to the heat emitters to heat up the room again, and the leaving water temperature setpoint will be lowered.
`Space heating/cooling` is ON, the external room thermostat is "Thermo OFF" and the outdoor temperature drops below 4°C	The unit will supply leaving water to the heat emitters to heat up the room again, and the leaving water temperature setpoint will be lowered.
`Space heating/cooling` is ON and the external room thermostat is "Thermo ON"	Room frost protection is guaranteed by the normal logic.

In case of two leaving water temperature zones:

If...	Then...
`Space heating/cooling` is OFF and the outdoor ambient temperature drops below 4°C	The unit will supply leaving water to the heat emitters to heat up the room again, and the leaving water temperature setpoint will be lowered.
`Space heating/cooling` is ON, the external room thermostat is "Thermo OFF", the operation mode is "heating" and the outdoor temperature drops below 4°C	The unit will supply leaving water to the heat emitters to heat up the room again, and the leaving water temperature setpoint will be lowered.
`Space heating/cooling` is ON and the operation mode is "cooling"	There is no room frost protection.

Room thermostat control ([C-07]=2)

During room thermostat control, room frost protection [2-06] is guaranteed when activated. If so, and the room temperature drops below the room antifrost

temperature [2-05], the unit will supply leaving water to the heat emitters to heat up the room again.

#	Code	Description
[1.4.1]	[2-06]	`Activation`: ▪ 0 **No**: Antifrost functionality is OFF. ▪ 1 **Yes**: Antifrost functionality is on.
[1.4.2]	[2-05]	`Room setpoint`: ▪ 4°C~16°C

INFORMATION

When the user interface used as room thermostat is disconnected (because of incorrect wiring or damage of the cable), then room frost protection is NOT guaranteed.

NOTICE

If `Emergency` is set to `Manual` ([9.5.1]=0), and the unit is triggered to start emergency operation, the unit will stop and needs to be recovered manually via the user interface. To recover operation manually, go to the `Malfunctioning` main menu screen, and confirm emergency operation before starting.

Room frost protection is active even if the user does not confirm emergency operation.

Setpoint range

Only applicable in room thermostat control.

To save energy by preventing overheating or undercooling the room, you can limit the range of the room temperature for heating and/or cooling.

NOTICE

When adjusting the room temperature ranges, all desired room temperatures are also adjusted to guarantee they are between the limits.

#	Code	Description
[1.5.1]	[3-07]	`Heating minimum`
[1.5.2]	[3-06]	`Heating maximum`
[1.5.3]	[3-09]	`Cooling minimum`
[1.5.4]	[3-08]	`Cooling maximum`

Room sensor offset

Only applicable in room thermostat control.

To calibrate the (external) room temperature sensor, give an offset to the value of the room thermistor as measured by the user interface used as room thermostat or by the external room sensor. The setting can be used to compensate for situations where the user interface used as room thermostat or the external room sensor cannot be installed at the ideal location.

See "6.7 Setting up an external temperature sensor" [▸ 60]).

#	Code	Description
[1.6]	[2-0A]	`Room sensor offset` (user interface used as room thermostat): Offset on the actual room temperature measured by the user interface used as room thermostat. ▪ –5°C~5°C, step 0.5°C
[1.7]	[2-09]	`Room sensor offset` (external room sensor option): Only applicable if the external room sensor option is installed and configured. ▪ –5°C~5°C, step 0.5°C

Room comfort setpoint

Restriction: Only applicable if:

- Smart Grid is enabled ([9.8.4]=`Smart Grid`), and
- Room buffering is enabled ([9.8.7]=`Yes`)

If room buffering is enabled, the extra energy from photovoltaic panels is buffered in the DHW tank and in the space heating/cooling circuit (i.e. heat up or cool down the room). With the room comfort setpoints (cooling/heating) you can modify the maximum/minimum setpoints that will be used when buffering the extra energy in the space heating/cooling circuit.

#	Code	Description
[1.9.1]	[9-0A]	`Heating comfort setpoint` ▪ [3-07]~[3-06]°C
[1.9.2]	[9-0B]	`Cooling comfort setpoint` ▪ [3-09]~[3-08]°C

10.6.3 Main zone

Overview

The following items are listed in the submenu:

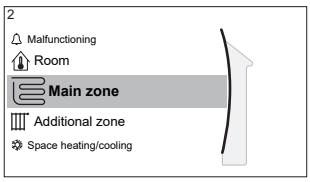

[2] `Main zone`

Setpoint screen

[2.1] `Schedule`

[2.2] `Heating schedule`

[2.3] `Cooling schedule`

[2.4] `Setpoint mode`

[2.5] `Heating WD curve`

[2.6] `Cooling WD curve`

[2.7] `Emitter type`

[2.8] `Setpoint range`

[2.9] `Control`

[2.A] `Ext thermostat type`

[2.B] `Delta T`

[2.C] `Modulation`

[2.D] `Shut off valve`

[2.E] `WD curve type`

Setpoint screen

Control the leaving water temperature for the main zone via setpoint screen [2] `Main zone`.

See "10.3.5 Setpoint screen" [▸ 144].

Schedule

Indicate if the temperature of the leaving water is defined according to a schedule or not.

Influence of the LWT setpoint mode [2.4] is as follows:

- In `Fixed` LWT setpoint mode, the scheduled actions consist of desired leaving water temperatures, either preset or custom.
- In `Weather dependent` LWT setpoint mode, the scheduled actions consist of desired shift actions, either preset or custom.

#	Code	Description
[2.1]	N/A	`Schedule`: ▪ 0: `No` ▪ 1: `Yes`

Heating schedule

Define a heating temperature schedule for the main zone via [2.2] `Heating schedule`.

See "10.4.3 Schedule screen: Example" [▸ 150].

Cooling schedule

Define a cooling temperature schedule for the main zone via [2.3] `Cooling schedule`.

See "10.4.3 Schedule screen: Example" [▸ 150].

Setpoint mode

Define the setpoint mode:

- `Fixed`: the desired leaving water temperature does not depend on the outdoor ambient temperature.
- In `WD heating, fixed cooling` mode, the desired leaving water temperature:
  - depends on the outdoor ambient temperature for heating
  - does NOT depend on the outdoor ambient temperature for cooling
- In `Weather dependent` mode, the desired leaving water temperature depends on the outdoor ambient temperature.

#	Code	Description
[2.4]	N/A	`Setpoint mode`: ▪ `Fixed` ▪ `WD heating, fixed cooling` ▪ `Weather dependent`

When weather dependent operation is active, low outdoor temperatures will result in warmer water and vice versa. During weather dependent operation, the user can shift the water temperature up or down by a maximum of 10°C.

Heating WD curve

Set weather-dependent heating for the main zone (if [2.4]=1 or 2):

#	Code	Description
[2.5]	[1-00] [1-01] [1-02] [1-03]	Set weather-dependent heating: **Note:** There are 2 methods to set the weather dependent curve. See "10.5.2 2-points curve" [▶ 156] and "10.5.3 Slope-offset curve" [▶ 157]. Both curve types require 4 field settings to be configured according to the figure below. 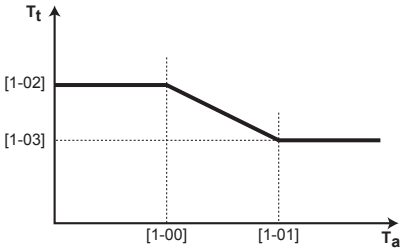 ▪ T_t: Target leaving water temperature (main zone) ▪ T_a: Outdoor temperature ▪ [1-00]: Low outdoor ambient temperature. –40°C~+5°C ▪ [1-01]: High outdoor ambient temperature. 10°C~25°C ▪ [1-02]: Desired leaving water temperature when the outdoor temperature equals or drops below the low ambient temperature. [9-01]°C~[9-00]°C **Note:** This value should be higher than [1-03] as for low outdoor temperatures warmer water is required. ▪ [1-03]: Desired leaving water temperature when the outdoor temperature equals or rises above the high ambient temperature. [9-01]°C~min(45, [9-00])°C **Note:** This value should be lower than [1-02] as for high outdoor temperatures less warm water is required.

Cooling WD curve

Set weather-dependent cooling for the main zone (if [2.4]=2):

#	Code	Description
[2.6]	[1-06] [1-07] [1-08] [1-09]	Set weather-dependent cooling: **Note:** There are 2 methods to set the weather dependent curve. See "10.5.2 2-points curve" [▶ 156] and "10.5.3 Slope-offset curve" [▶ 157]. Both curve types require 4 field settings to be configured according to the figure below. 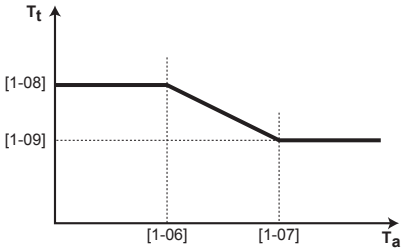 ▪ T_t: Target leaving water temperature (main zone) ▪ T_a: Outdoor temperature ▪ [1-06]: Low outdoor ambient temperature. 10°C~25°C ▪ [1-07]: High outdoor ambient temperature. 25°C~43°C ▪ [1-08]: Desired leaving water temperature when the outdoor temperature equals or drops below the low ambient temperature. [9-03]°C~[9-02]°C **Note:** This value should be higher than [1-09] as for low outdoor temperatures less cold water is required. ▪ [1-09]: Desired leaving water temperature when the outdoor temperature equals or rises above the high ambient temperature. [9-03]°C~[9-02]°C **Note:** This value should be lower than [1-08] as for high outdoor temperatures colder water is required.

Emitter type

Heating up or cooling down the main zone can take longer. This depends on:

- The water volume of the system
- The heater emitter type of the main zone

The setting **`Emitter type`** can compensate for a slow or a quick heating/cooling system during the heat up/cool down cycle. In room thermostat control, **`Emitter type`** influences the maximum modulation of the desired leaving water temperature, and the possibility for usage of the automatic cooling/heating changeover based on the indoor ambient temperature.

It is important to set **`Emitter type`** correctly and in accordance with your system layout. The target delta T for the main zone depends on it.

#	Code	Description
[2.7]	[2-0C]	Emitter type: ▪ 0: Underfloor heating ▪ 1: Fancoil unit ▪ 2: Radiator

The setting Emitter type influences the space heating setpoint range and the target delta T in heating as follows:

Emitter type Main zone	Space heating setpoint range [9-01]~[9-00]	Target delta T in heating [1-0B]
0: Underfloor heating	Maximum 55°C	Variable (see [2.B.1])
1: Fancoil unit	Maximum 55°C	Variable (see [2.B.1])
2: Radiator	Maximum 65°C	Fixed 10°C

NOTICE

The maximum setpoint in space heating depends on the emitter type as can be seen in above table. If there are 2 water temperature zones, then the maximum setpoint is the maximum of the 2 zones.

NOTICE

NOT configuring the system in the following way can cause damage to the heat emitters. If there are 2 zones, it is important that in heating:

- the zone with the lowest water temperature is configured as the main zone, and
- the zone with the highest water temperature is configured as the additional zone.

NOTICE

If there are 2 zones and the emitter types are wrongly configured, water of high temperature can be sent towards a low temperature emitter (underfloor heating). To avoid this:

- Install an aquastat/thermostatic valve to avoid too high temperatures towards a low temperature emitter.
- Make sure you set the emitter types for the main zone [2.7] and for the additional zone [3.7] correctly in accordance with the connected emitter.

NOTICE

Average emitter temperature = Leaving water temperature – (Delta T)/2

This means that for a same leaving water temperature setpoint, the average emitter temperature of radiators is lower than that of underfloor heating because of a bigger delta T.

Example radiators: 40–10/2=**35°C**

Example underfloor heating: 40–5/2=**37.5°C**

To compensate, you can:

- Increase the weather-dependent curve desired temperatures [2.5].
- Enable leaving water temperature modulation and increase the maximum modulation [2.C].

Setpoint range

To prevent a wrong (i.e. too hot or too cold) leaving water temperature for the main leaving water temperature zone, limit its temperature range.

NOTICE

In case of a floor heating application it is important to limit the:

- maximum leaving water temperature at heating operation according to the specifications of the floor heating installation.
- the minimum leaving water temperature at cooling operation to 18~20°C to prevent condensation on the floor.

NOTICE

- When adjusting the leaving water temperature ranges, all desired leaving water temperatures are also adjusted to guarantee they are between the limits.
- Always balance between the desired leaving water temperature with the desired room temperature and/or the capacity (according to the design and selection of the heat emitters). The desired leaving water temperature is the result of several settings (preset values, shift values, weather-dependent curves, modulation). As a result, too high or too low leaving water temperatures could occur which lead to overtemperatures or capacity shortage. By limiting the leaving water temperature range to adequate values (depending on the heat emitter), such situations can be avoided.

Example: In heating mode, leaving water temperatures must be sufficiently higher than the room temperatures. To avoid that the room cannot heat up as desired, set the minimum leaving water temperature to 28°C.

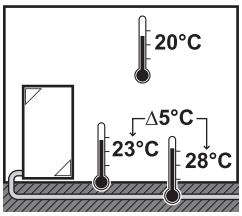

#	Code	Description
Leaving water temperature range for the main leaving water temperature zone (= the leaving water temperature zone with the lowest leaving water temperature in heating operation and the highest leaving water temperature in cooling operation)		
[2.8.1]	[9-01]	`Heating minimum`: ▪ 15°C~37°C
[2.8.2]	[9-00]	`Heating maximum`: ▪ [2-0C]=2 (emitter type main zone = radiator) 37°C~65°C ▪ Else: 37°C~55°C
[2.8.3]	[9-03]	`Cooling minimum`: ▪ 5°C~18°C
[2.8.4]	[9-02]	`Cooling maximum`: ▪ 18°C~22°C

Control

Define how the operation of the unit is controlled.

Control	In this control...
`Leaving water`	Unit operation is decided based on the leaving water temperature regardless the actual room temperature and/or heating or cooling demand of the room.
`External room thermostat`	Unit operation is decided by the external thermostat or equivalent (e.g. heat pump convector).
`Room thermostat`	Unit operation is decided based on the ambient temperature of the dedicated Human Comfort Interface (BRC1HHDA used as room thermostat).

#	Code	Description
[2.9]	[C-07]	▪ 0: `Leaving water` ▪ 1: `External room thermostat` ▪ 2: `Room thermostat`

Ext thermostat type

Only applicable in external room thermostat control.

NOTICE

If an external room thermostat is used, the external room thermostat will control the room frost protection. However, the room frost protection is only possible if [C.2] `Space heating/cooling=On`.

#	Code	Description
[2.A]	[C-05]	External room thermostat type for the main zone: ▪ 1: `1 contact`: The used external room thermostat can only send a thermo ON/OFF condition. There is no separation between heating or cooling demand. The room thermostat is connected to only 1 digital input (X2M/35). Select this value in case of a connection to the heat pump convector (FWXV). ▪ 2: `2 contacts`: The used external room thermostat can send a separate heating/cooling thermo ON/OFF condition. The room thermostat is connected to 2 digital inputs (X2M/35 and X2M/34). Select this value in case of connection to multi-zoning wired controls (see "5.2.4 Possible options for the indoor unit" [▸ 27]), wired room thermostats (EKRTWA) or wireless room thermostats (EKRTR1, EKRTRB)

Leaving water temperature: Delta T

In heating for the main zone, the target delta T (temperature difference) depends on the selected emitter type for the main zone.

The difference delta T indicates, depends on the operation mode:

- In heating mode, delta T indicates the temperature difference between the leaving water setpoint and entering water.

- In cooling mode, delta T indicates the temperature difference between entering and leaving water temperature.

The unit is designed to support underfloor loops operation. The recommended leaving water temperature for underfloor loops is 35°C. In such case, the unit will realize a temperature difference of 5°C, which means that the entering water temperature is around 30°C.

Depending on the installed type of heat emitters (radiators, heat pump convector, underfloor loops) or situation, you can change the difference between entering and leaving water temperature.

Note: The pump will regulate its flow to keep the delta T. In some special cases, the measured delta T can differ from the set value.

INFORMATION

When only the backup heater is active in heating, delta T will be controlled according to the fixed capacity of the backup heater. It is possible that this delta T is different from the selected target delta T.

INFORMATION

In heating, the target delta T will only be achieved after some operation time, when the setpoint is being reached, because of the big difference between leaving water temperature setpoint and inlet temperature at startup.

INFORMATION

If the main zone or the additional zone has a heating demand, and this zone is equipped with radiators, then the target delta T that the unit will use in heating operation will be 10°C fixed.

If the zones are not equipped with radiators, then in heating the unit will give priority to the target delta T for the additional zone, if there is a heating demand in the additional zone.

In cooling the unit will give priority to the target delta T for the additional zone, if there is a cooling demand in the additional zone.

#	Code	Description
[2.B.1]	[1-0B]	`Delta T heating`: A minimum temperature difference is required for proper operation of heat emitters in heating mode. ▪ If [2-0C]=2, this is fixed to 10°C ▪ Else: 3°C~10°C
[2.B.2]	[1-0D]	`Delta T cooling`: A minimum temperature difference is required for proper operation of heat emitters in cooling mode. ▪ 3°C~10°C

Leaving water temperature: Modulation

Only applicable in case of room thermostat control.

When using the room thermostat functionality, the customer needs to set the desired room temperature. The unit will supply hot water to the heat emitters and the room will be heated.

Additionally, also the desired leaving water temperature must be configured: if `Modulation` is enabled, the unit automatically calculates the desired leaving water temperature. These calculations are based on:

- the preset temperatures, or
- the desired weather-dependent temperatures (if weather-dependent is enabled)

Moreover, with `Modulation` enabled, the desired leaving water temperature is lowered or raised in function of the desired room temperature and the difference between the actual and the desired room temperature. This results in:

- stable room temperatures, exactly matching the desired temperature (higher comfort level)
- less on/off cycles (lower noise level, higher comfort and higher efficiency)
- water temperatures as low as possible to match the desired temperature (higher efficiency)

If `Modulation` is disabled, set the desired leaving water temperature via [2] `Main zone`.

#	Code	Description
[2.C.1]	[8-05]	`Modulation`: ▪ 0 **No** (disabled) ▪ 1 `Yes` (enabled) **Note:** The desired leaving water temperature can only be read out on the user interface.
[2.C.2]	[8-06]	`Max modulation`: ▪ 0°C~10°C This is the temperature value by which the desired leaving water temperature is increased or decreased.

INFORMATION

When leaving water temperature modulation is enabled, the weather-dependent curve needs to be set to a higher position than [8-06] plus the minimum leaving water temperature setpoint required to reach a stable condition on the comfort setpoint for the room. To increase efficiency, modulation can lower the leaving water setpoint. By setting the weather-dependent curve to a higher position, it cannot drop below the minimum setpoint. See the illustration below.

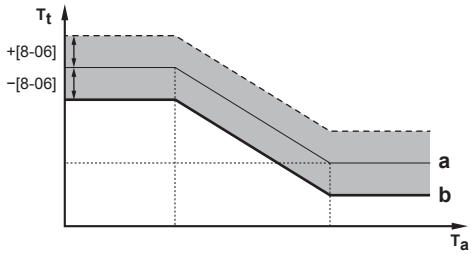

a Weather-dependent curve
b Minimum leaving water temperature setpoint required to reach a stable condition on the comfort setpoint for the room.

Shut off valve

The following is only applicable in case of 2 leaving water temperature zones. In case of 1 leaving water temperature zone, connect the shut-off valve to the heating/cooling output.

The shut off valve for the main leaving water temperature zone can close under these circumstances:

INFORMATION

During defrost operation, the shut-off valve is ALWAYS opened.

`During thermo`: If [F-0B] is enabled, the shut off valve closes when there is no heating demand from the main zone. Enable this setting to:

- avoid leaving water supply to the heat emitters in the main LWT zone (through the mixing valve station) when there is request from the additional LWT zone.
- activate the ON/OFF pump of the mixing valve station ONLY when there is demand.

#	Code	Description
[2.D.1]	[F-0B]	The shut off valve: ▪ 0 `No`: is NOT influenced by heating or cooling demand. ▪ 1 `Yes`: closes when there is NO heating or cooling demand.

INFORMATION

The setting [F-0B] is only valid when there is a thermostat or external room thermostat request setting (NOT in case of leaving water temperature setting).

`During cooling`: If [F-0C] is enabled, the shut off valve closes when the unit is running in cooling operation mode. Enable this setting to avoid cold leaving water through the heat emitter and the forming of condensation (e.g. under floor heating loops or radiators).

#	Code	Description
[2.D.2]	[F-0C]	The shut off valve: ▪ 0 `No`: is NOT influenced by changing the space operation mode to cooling. ▪ 1 `Yes`: closes when the space operation mode is cooling.

WD curve type

The weather-dependent curve can be defined using the `2-points` method or the `Slope-Offset` method.

See "10.5.2 2-points curve" [▸ 156] and "10.5.3 Slope-offset curve" [▸ 157].

#	Code	Description
[2.E]	N/A	▪ `2-points` ▪ `Slope-Offset`

10.6.4 Additional zone

Overview

The following items are listed in the submenu:

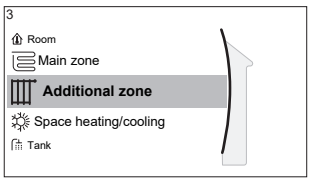

[3] Additional zone

Setpoint screen

[3.1] Schedule

[3.2] Heating schedule

[3.3] Cooling schedule

[3.4] Setpoint mode

[3.5] Heating WD curve

[3.6] Cooling WD curve

[3.7] Emitter type

[3.8] Setpoint range

[3.9] Control

[3.A] Ext thermostat type

[3.B] Delta T

[3.C] WD curve type

Setpoint screen

Control the leaving water temperature for the additional zone via setpoint screen [3] Additional zone.

See "10.3.5 Setpoint screen" [▶ 144].

Schedule

Indicates if the desired leaving water temperature is according to a schedule.

See "10.6.3 Main zone" [▶ 165].

#	Code	Description
[3.1]	N/A	Schedule: ▪ No ▪ Yes

Heating schedule

Define a heating temperature schedule for the additional zone via [3.2] Heating schedule.

See "10.4.3 Schedule screen: Example" [▶ 150].

Cooling schedule

Define a cooling temperature schedule for the additional zone via [3.3] Cooling schedule.

See "10.4.3 Schedule screen: Example" [▶ 150].

Setpoint mode

The setpoint mode of the additional zone can be independently set from the setpoint mode of the main zone.

See "**Setpoint mode**" [▶ 167].

#	Code	Description
[3.4]	N/A	`Setpoint mode`: ▪ `Fixed` ▪ `WD heating, fixed cooling` ▪ `Weather dependent`

Heating WD curve

Set weather-dependent heating for the additional zone (if [3.4]=1 or 2):

#	Code	Description
[3.5]	[0-00] [0-01] [0-02] [0-03]	Set weather-dependent heating: **Note:** There are 2 methods to set the weather dependent curve. See "10.5.2 2-points curve" [▸ 156] and "10.5.3 Slope-offset curve" [▸ 157]. Both curve types require 4 field settings to be configured according to the figure below. 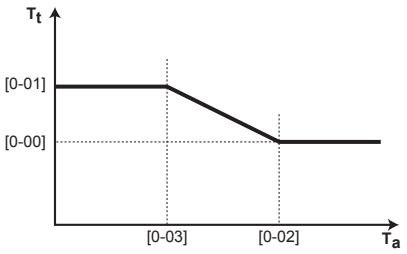 ▪ T_t: Target leaving water temperature (additional zone) ▪ T_a: Outdoor temperature ▪ [0-03]: Low outdoor ambient temperature. –40°C~+5°C ▪ [0-02]: High outdoor ambient temperature. 10°C~25°C ▪ [0-01]: Desired leaving water temperature when the outdoor temperature equals or drops below the low ambient temperature. [9-05]°C~[9-06]°C **Note:** This value should be higher than [0-00] as for low outdoor temperatures warmer water is required. ▪ [0-00]: Desired leaving water temperature when the outdoor temperature equals or rises above the high ambient temperature. [9-05]~min(45, [9-06])°C **Note:** This value should be lower than [0-01] as for high outdoor temperatures less warm water is required.

Cooling WD curve

Set weather-dependent cooling for the additional zone (if [3.4]=2):

#	Code	Description
[3.6]	[0-04] [0-05] [0-06] [0-07]	Set weather-dependent cooling: **Note:** There are 2 methods to set the weather dependent curve. See "10.5.2 2-points curve" [▶ 156] and "10.5.3 Slope-offset curve" [▶ 157]. Both curve types require 4 field settings to be configured according to the figure below. 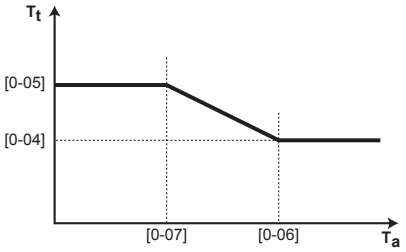 ▪ T_t: Target leaving water temperature (additional zone) ▪ T_a: Outdoor temperature ▪ [0-07]: Low outdoor ambient temperature. 10°C~25°C ▪ [0-06]: High outdoor ambient temperature. 25°C~43°C ▪ [0-05]: Desired leaving water temperature when the outdoor temperature equals or drops below the low ambient temperature. [9-07]°C~[9-08]°C **Note:** This value should be higher than [0-04] as for low outdoor temperatures less cold water is required. ▪ [0-04]: Desired leaving water temperature when the outdoor temperature equals or rises above the high ambient temperature. [9-07]°C~[9-08]°C **Note:** This value should be lower than [0-05] as for high outdoor temperatures colder water is required.

Emitter type

For more information about `Emitter type`, see "10.6.3 Main zone" [▶ 165].

#	Code	Description
[3.7]	[2-0D]	`Emitter type`: ▪ 0: `Underfloor heating` ▪ 1: `Fancoil unit` ▪ 2: `Radiator`

The setting of the emitter type has an influence on the space heating setpoint range and the target delta T in heating as follows:

Emitter type Additional zone	Space heating setpoint range [9-05]~[9-06]	Target delta T in heating [1-0C]
0: Underfloor heating	Maximum 55°C	Variable (see [3.B.1])
1: Fancoil unit	Maximum 55°C	Variable (see [3.B.1])
2: Radiator	Maximum 65°C	Fixed 10°C

Setpoint range

For more information about Setpoint range, see "10.6.3 Main zone" [▸ 165].

#	Code	Description
Leaving water temperature range for the additional leaving water temperature zone (= the leaving water temperature zone with the highest leaving water temperature in heating operation and the lowest leaving water temperature in cooling operation)		
[3.8.1]	[9-05]	Heating minimum: 15°C~37°C
[3.8.2]	[9-06]	Heating maximum ▪ [2-0D]=2 (emitter type additional zone = radiator) 37°C~65°C ▪ Else: 37°C~55°C
[3.8.3]	[9-07]	Cooling minimum ▪ 5°C~18°C
[3.8.4]	[9-08]	Cooling maximum ▪ 18°C~22°C

Control

The control type for the additional zone is read only. It is determined by the control type of the main zone.

See "10.6.3 Main zone" [▸ 165].

#	Code	Description
[3.9]	N/A	Control: ▪ Leaving water if the control type of the main zone is Leaving water. ▪ External room thermostat if the control type of the main zone is: - External room thermostat,or - Room thermostat.

Ext thermostat type

Only applicable in external room thermostat control.

Also see "10.6.3 Main zone" [▸ 165].

#	Code	Description
[3.A]	[C-06]	External room thermostat type for the additional zone: ▪ 1: `1 contact`. Connected to only 1 digital input (X2M/35a) ▪ 2: `2 contacts`. Connected to 2 digital inputs (X2M/34a and X2M/35a)

Leaving water temperature: Delta T

For more information, see "10.6.3 Main zone" [▸ 165].

#	Code	Description
[3.B.1]	[1-0C]	`Delta T heating`: A minimum temperature difference is required for the good operation of heat emitters in heating mode. ▪ If [2-0D] = 2, this is fixed to 10°C ▪ Else: 3°C~10°C
[3.B.2]	[1-0E]	`Delta T cooling`: A minimum temperature difference is required for the good operation of heat emitters in cooling mode. ▪ 3°C~10°C

WD curve type

There are 2 methods to define the weather-dependent curves:

- `2-points` (see "10.5.2 2-points curve" [▸ 156])
- `Slope-Offset` (see "10.5.3 Slope-offset curve" [▸ 157])

In [2.E] `WD curve type`, you can choose which method you want to use.

In [3.C] `WD curve type`, the chosen method is shown read-only (same value as in [2.E]).

#	Code	Description
[2.E] / [3.C]	N/A	▪ `2-points` ▪ `Slope-Offset`

10.6.5 Space heating/cooling

INFORMATION

Cooling is only applicable in case of reversible models.

Overview

The following items are listed in the submenu:

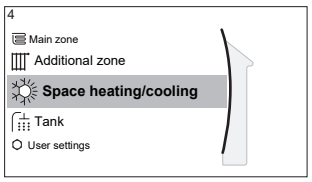

[4] Space heating/cooling

[4.1] Operation mode

[4.2] Operation mode schedule

[4.3] Operation range

[4.4] Number of zones

[4.5] Pump operation mode

[4.6] Unit type

[4.7] or [4.8] Pump limitation

[4.9] Pump outside range

[4.A] Increase around 0°C

[4.B] Overshoot

[4.C] Antifrost

About space operation modes

Your unit can be a heating or a heating/cooling model:

- If your unit is a heating model, it can heat up a space.
- If your unit is a heating/cooling model, it can both heat up and cool down a space. You have to tell the system which operation mode to use.

To determine if a heating/cooling heat pump model is installed

1	Go to [4]: Space heating/cooling.	
2	Check if [4.1] Operation mode is listed and editable. If so, a heating/cooling heat pump model is installed.	

To tell the system which space operation to use, you can:

You can...	Location
Check which space operation mode is currently used.	Home screen
Set the space operation mode permanently.	Main menu
Restrict automatic changeover according to a monthly schedule.	

To check which space operation mode is currently used

The space operation mode is displayed on the home screen:

- When the unit is in heating mode, the ☼ icon is shown.
- When the unit is in cooling mode, the ❄ icon is shown.

The status indicator shows if the unit is currently in operation:

- When the unit is not in operation, the status indicator will show a blue pulsation with an interval of approximately 5 seconds.
- While the unit is in operation, the status indicator will light up blue constantly.

To set the space operation mode

1	Go to [4.1]: Space heating/cooling > Operation mode	

2	Select one of the following options: ▪ `Heating`: Only heating mode ▪ `Cooling`: Only cooling mode ▪ `Automatic`: The operation mode changes automatically between heating and cooling based on the outdoor temperature. Restricted per month according to the `Operation mode schedule` [4.2].	

When `Automatic` is selected, the unit switches its operation mode, based on the `Operation mode schedule` [4.2]. In this schedule, the end user indicates which operation is allowed for each month.

To restrict automatic changeover according to a schedule

Conditions: You set the space operation mode to `Automatic`.

1	Go to [4.2]: `Space heating/cooling` > `Operation mode schedule`.	
2	Select a month.	
3	For each month, select an option: ▪ `Reversible`: Not restricted ▪ `Heating only`: Restricted ▪ `Cooling only`: Restricted	
4	Confirm the changes.	

Example: Changeover restrictions

When	Restriction
During cold season. **Example:** October, November, December, January, February and March.	`Heating only`
During warm season. **Example:** June, July and August.	`Cooling only`
In-between. **Example:** April, May and September.	`Reversible`

The unit determines its operation mode by the outdoor temperature if:

- `Operation mode`=`Automatic`, and
- `Operation mode schedule`=`Reversible`.

The unit determines its operation mode in such a way that it will always stay within the following operation ranges:

- `Space heating off temperature`
- `Space cooling off temperature`

The outdoor temperature is time-averaged. If the outdoor temperature drops, the operation mode will switch to heating and vice versa.

If the outdoor temperature is between the `Space heating off temperature` and the `Space cooling off temperature`, the operation mode remains unchanged.

Operation range

Depending on the average outdoor temperature, the operation of the unit in space heating or space cooling is prohibited.

#	Code	Description
[4.3.1]	[4-02]	`Space heating off temperature`: When the averaged outdoor temperature rises above this value, space heating is turned off.[(a)] ▪ 14°C~35°C
[4.3.2]	[F-01]	`Space cooling off temperature`: When the averaged outdoor temperature drops below this value, space cooling is turned off.[(a)] ▪ 10°C~35°C

[(a)] This setting is also used in automatic heating/cooling changeover.

Exception: If the system is configured in room thermostat control with one leaving water temperature zone and quick heat emitters, the operation mode will change based on the measured indoor temperature. Besides the desired heating/cooling room temperature, the installer sets a hysteresis value (e.g. when in heating, this value is related to the desired cooling temperature) and an offset value (e.g. when in heating, this value is related to the desired heating temperature).

Example: A unit is configured as following:

- Desired room temperature in heating mode: 22°C
- Desired room temperature in cooling mode: 24°C
- Hysteresis value: 1°C
- Offset: 4°C

Changeover from heating to cooling will occur when the room temperature rises above the maximum of the desired cooling temperature added by the hysteresis value (thus 24+1=25°C) and the desired heating temperature added by the offset value (thus 22+4=26°C).

Oppositely, changeover from cooling to heating will occur when the room temperature drops below the minimum of the desired heating temperature subtracted by the hysteresis value (thus 22–1=21°C) and the desired cooling temperature subtracted by the offset value (thus 24–4=20°C)

Guard timer to prevent too frequent changing from heating to cooling and vice versa.

#	Code	Description
Changeover settings related to the indoor temperature. Only applicable when `Automatic` is selected and the system is configured in room thermostat control with 1 leaving water temperature zone and quick heat emitters.		
N/A	[4-0B]	Hysteresis: ensures that changeover is only done when necessary. The space operation only changes from heating to cooling when the room temperature rises above the desired cooling temperature added by the hysteresis value. ▪ Range: 1°C~10°C

#	Code	Description
N/A	[4-0D]	Offset: ensures that the active desired room temperature is always reached. In heating mode, the space operation only changes when the room temperature rises above the desired heating temperature added by the offset value. ▪ Range: 1°C~10°C

Number of zones

The system can supply leaving water to up to 2 water temperature zones. During configuration, the number of water zones must be set.

INFORMATION

Mixing station. If your system layout contains 2 LWT zones, you need to install a mixing station in front of the main LWT zone.

#	Code	Description
[4.4]	[7-02]	▪ 0: `Single zone` Only one leaving water temperature zone: 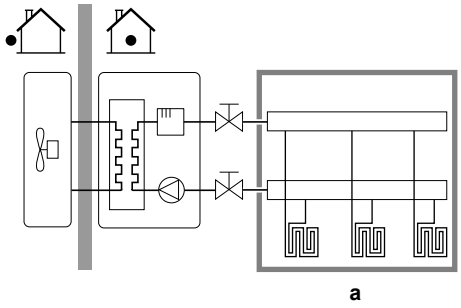 **a** Main LWT zone
[4.4]	[7-02]	▪ 1: `Dual zone` Two leaving water temperature zones. The main leaving water temperature zone consists of the higher load heat emitters and a mixing station to achieve the desired leaving water temperature. In heating: 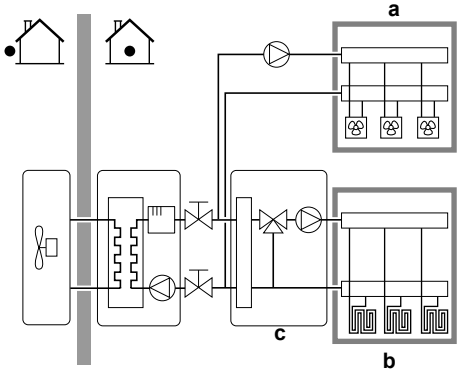 **a** Additional LWT zone: Highest temperature **b** Main LWT zone: Lowest temperature **c** Mixing station

NOTICE

NOT configuring the system in the following way can cause damage to the heat emitters. If there are 2 zones, it is important that in heating:

- the zone with the lowest water temperature is configured as the main zone, and
- the zone with the highest water temperature is configured as the additional zone.

NOTICE

If there are 2 zones and the emitter types are wrongly configured, water of high temperature can be sent towards a low temperature emitter (underfloor heating). To avoid this:

- Install an aquastat/thermostatic valve to avoid too high temperatures towards a low temperature emitter.
- Make sure you set the emitter types for the main zone [2.7] and for the additional zone [3.7] correctly in accordance with the connected emitter.

Pump operation mode

When the space heating/cooling operation is OFF, the pump is always OFF. When space heating/cooling operation is ON, you have the choice between these operation modes:

#	Code	Description
[4.5]	[F–0D]	`Pump operation mode`: ▪ 0 `Continuous`: Continuous pump operation, regardless of thermo ON or OFF condition. **Remark:** Continuous pump operation requires more energy than sample or request pump operation. 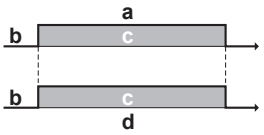 **a** Space heating/cooling control **b** Off **c** On **d** Pump operation

#	Code	Description
[4.5]	[F-0D]	▪ 1 `Sample`: The pump is ON when there is heating or cooling demand as the leaving water temperature has not yet reached the desired temperature yet. When thermo OFF condition occurs, the pump runs every 3 minutes to check the water temperature and demand heating or cooling if necessary. **Remark:** Sample is ONLY available in leaving water temperature control. 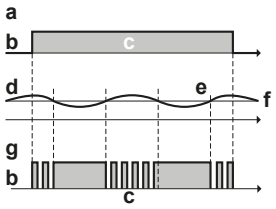 **a** Space heating/cooling control **b** Off **c** On **d** LWT temperature **e** Actual **f** Desired **g** Pump operation
[4.5]	[F-0D]	▪ 2 `Request`: Pump operation based on request. **Example:** Using a room thermostat and thermostat creates thermo ON/OFF condition. **Remark:** NOT available in leaving water temperature control. 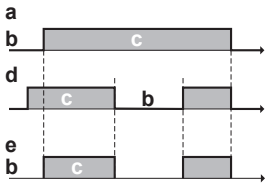 **a** Space heating/cooling control **b** Off **c** On **d** Heating demand (by external room thermostat or room thermostat) **e** Pump operation

Unit type

In this part of the menu it can be read out which type of unit is used:

#	Code	Description
[4.6]	[E-02]	`Unit type`: ▪ 0 `Reversible` ▪ 1 `Heating only`

Pump limitation

Pump speed limitation [9-0D] defines the maximum pump speed. In normal conditions, the default setting should NOT be modified. The pump speed limitation will be overruled when the flow rate is in the range of the minimum flow (error 7H).

In most cases, instead of using [9-0D], you can prevent flow noises by performing hydraulic balancing.

#	Code	Description
[4.7]	[9-0D]	`Pump limitation` Possible values: see below.

Possible values:

Value	Description
0	`No limitation`
1~4	General limitation. There is limitation in all conditions. The required delta T control and comfort are NOT guaranteed. ▪ 1: `90% pump speed` ▪ 2: `80% pump speed` ▪ 3: `70% pump speed` ▪ 4: `60% pump speed`
5~8	Limitation when no actuators. When there is no heating output, the pump speed limitation is applicable. When there is heating output, the pump speed is only determined by delta T in relation to the required capacity. With this limitation range, delta T is possible and the comfort is guaranteed. During sampling operation the pump runs for a short time to measure the water temperatures, which indicate if operation is required or not. ▪ 5: `90% pump speed during sampling` ▪ 6: `80% pump speed during sampling` ▪ 7: `70% pump speed during sampling` ▪ 8: `60% pump speed during sampling`

The maximum values depend on the unit type:

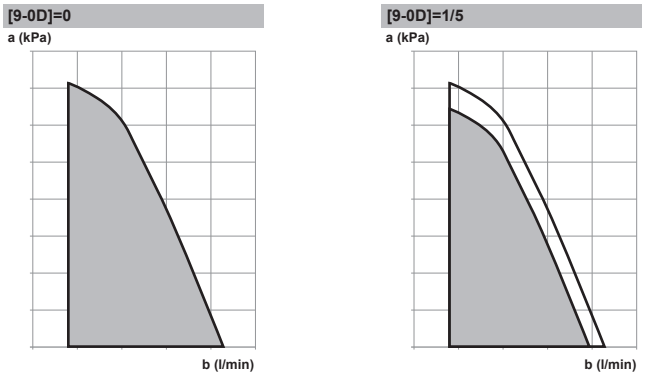

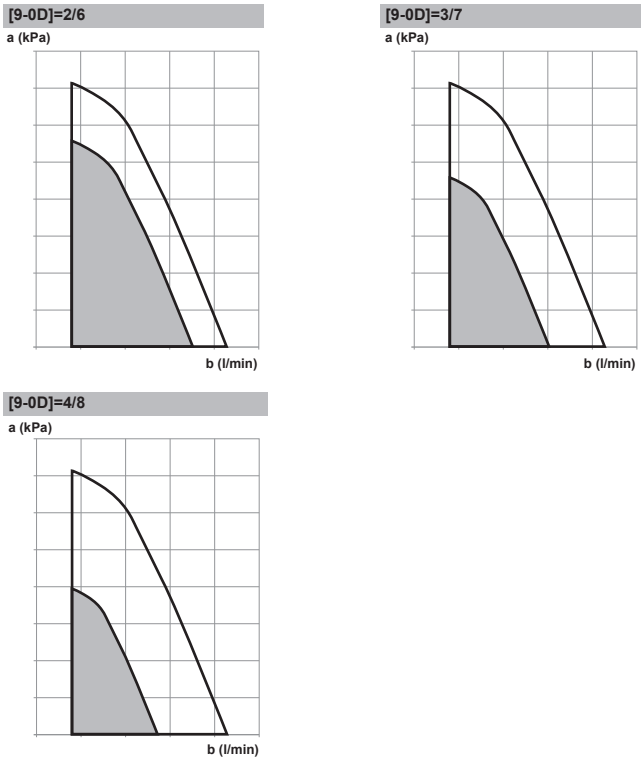

a External static pressure
b Water flow rate

Pump outside range

When the pump operation function is disabled the pump will stop if the outdoor temperature is higher than the value set by the `Space heating off temperature` [4-02] or if the outdoor temperature drops below the value set by the `Space cooling off temperature` [F-01]. When the pump operation is enabled, the pump operation is possible at all outdoor temperatures.

#	Code	Description
[4.9]	[F-00]	Pump operation: ▪ 0 Restricted: Disabled if outdoor temperature is higher than [4-02] or lower than [F-01] depending on heating/cooling operation mode. ▪ 1 Allowed: Possible at all outdoor temperatures.

Increase around 0°C

Use this setting to compensate for possible heat losses of the building due to the evaporation of melted ice or snow. (e.g. in cold region countries).

In heating operation, the desired leaving water temperature is locally increased around an outdoor temperature of 0°C.This compensation can be selected when using an absolute or a weather dependent desired temperature (see illustration below).

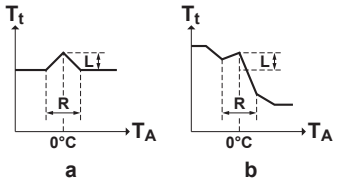

a Absolute desired LWT
b Weather dependent desired LWT

T_t Target leaving water temperature
T_A Outdoor ambient temperature
L Increase
R Span

#	Code	Description
[4.A]	[D-03]	Increase around 0°C: ▪ 0: No ▪ 1: increase 2°C, span 4°C ▪ 2: increase 4°C, span 4°C ▪ 3: increase 2°C, span 8°C ▪ 4: increase 4°C, span 8°C

Overshoot

Restriction: This function is only applicable in heating mode.

This function defines how much the water temperature may rise above the desired leaving water temperature before the compressor stops. The compressor will start up again when the leaving water temperature drops below the desired leaving water temperature.

#	Code	Description
[4.B]	[9-04]	Overshoot: ▪ 1°C~4°C

Undershoot

Restriction: This function is only applicable in cooling mode during compressor startup. It is NOT applicable for stable operation.

This function defines how much the water temperature may drop below the desired leaving water temperature before the compressor stops. The compressor will start up again when the leaving water temperature rises above the desired leaving water temperature.

#	Code	Description
N/A	[9-09]	Undershoot: ▪ 1°C~18°C

Antifrost

Antifrost [1.4] or [4.C] prevents the room from getting too cold. For more information about room frost protection, see "10.6.2 Room" [▸ 161].

10.6.6 Tank

Overview

The following items are listed in the submenu:

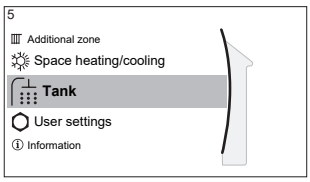

[5] Tank

Setpoint screen

[5.1] Powerful operation

[5.2] Comfort setpoint

[5.3] Eco setpoint

[5.4] Reheat setpoint

[5.5] Schedule

[5.6] Heat up mode

[5.7] Disinfection

[5.8] Maximum

[5.9] Hysteresis

[5.A] Hysteresis

[5.B] Setpoint mode

[5.C] WD curve

[5.D] Margin

[5.E] WD curve type

Tank setpoint screen

You can set the domestic hot water temperature using the setpoint screen. For more information about how to do this, see "10.3.5 Setpoint screen" [▶ 144].

Powerful operation

You can use powerful operation to immediately start heating up the water to the preset value (Storage comfort). However, this consumes extra energy. If powerful operation is active, will be shown on the home screen.

To activate powerful operation

Activate or deactivate Powerful operation as follows:

1	Go to [5.1]: Tank > Powerful operation	
2	Turn powerful operation Off or On.	

Usage example: You immediately need more hot water

If you are in the following situation:

- You already consumed most of your hot water.
- You cannot wait for the next scheduled action to heat up the DHW tank.

Then you can activate DHW powerful operation.

Advantage: The DHW tank immediately starts heating up the water to the preset value (Storage comfort).

INFORMATION

When powerful operation is active, the risk of space heating/cooling and capacity shortage comfort problems is significant. In case of frequent domestic hot water operation, frequent and long space heating/cooling interruptions will happen.

Comfort setpoint

Only applicable when domestic hot water preparation is Schedule only or Schedule + reheat. When programming the schedule, you can make use of

the comfort setpoint as a preset value. When you later want to change the storage setpoint, you only have to do it in one place.

The tank will heat up until the **storage comfort temperature** has been reached. It is the higher desired temperature when a storage comfort action is scheduled.

Additionally, a storage stop can be programmed. This feature puts a stop to tank heating even if the setpoint has NOT been reached. Only program a storage stop when tank heating is absolutely undesirable.

#	Code	Description
[5.2]	[6-0A]	`Comfort setpoint`: ▪ 30°C~[6-0E]°C

Eco setpoint

The **storage economic temperature** denotes the lower desired tank temperature. It is the desired temperature when a storage economic action is scheduled (preferably during day).

#	Code	Description
[5.3]	[6-0B]	`Eco setpoint`: ▪ 30°C~min(50,[6-0E])°C

Reheat setpoint

Desired reheat tank temperature, used:

- in `Schedule + reheat` mode, during reheat mode: the guaranteed minimum tank temperature is set by the `Reheat setpoint` minus the reheat hysteresis. If the tank temperature drops below this value, the tank is heated up.
- during storage comfort, to prioritize the domestic hot water preparation. When the tank temperature rises above this value, domestic hot water preparation and space heating/cooling are executed sequentially.

#	Code	Description
[5.4]	[6-0C]	`Reheat setpoint`: ▪ 30°C~min(50,[6-0E])°C

Schedule

You can set the tank temperature schedule using the schedule screen. For more information about this screen, see "10.4.3 Schedule screen: Example" [▸ 150].

Heat up mode

The domestic hot water can be prepared in 3 different ways. They differ from each other by the way the desired tank temperature is set and how the unit acts upon it.

#	Code	Description
[5.6]	[6-0D]	`Heat up mode`: ▪ 0: `Reheat only`: Only reheat operation is allowed. ▪ 1: `Schedule + reheat`: The domestic hot water tank is heated according to a schedule and between the scheduled heat up cycles, reheat operation is allowed. ▪ 2: `Schedule only`: The domestic hot water tank can ONLY be heated according to a schedule.

See the operation manual for more details.

INFORMATION

Risk of space heating capacity shortage for domestic hot water tank without internal booster heater: In case of frequent domestic hot water operation, frequent and long space heating/cooling interruption will happen when selecting the following:

`Tank` > `Heat up mode` > `Reheat only`.

Disinfection

Applies only to installations with a domestic hot water tank.

The disinfection function disinfects the domestic hot water tank by periodically heating the domestic hot water to a specific temperature.

CAUTION

The disinfection function settings MUST be configured by the installer according to the applicable legislation.

#	Code	Description
[5.7.1]	[2-01]	`Activation`: ▪ 0: `No` ▪ 1: `Yes`
[5.7.2]	[2-00]	`Operation day`: ▪ 0: `Every day` ▪ 1: `Monday` ▪ 2: `Tuesday` ▪ 3: `Wednesday` ▪ 4: `Thursday` ▪ 5: `Friday` ▪ 6: `Saturday` ▪ 7: `Sunday`
[5.7.3]	[2-02]	`Start time`
[5.7.4]	[2-03]	`Tank setpoint`: 55°C~75°C
[5.7.5]	[2-04]	`Duration`: 5~60 minutes

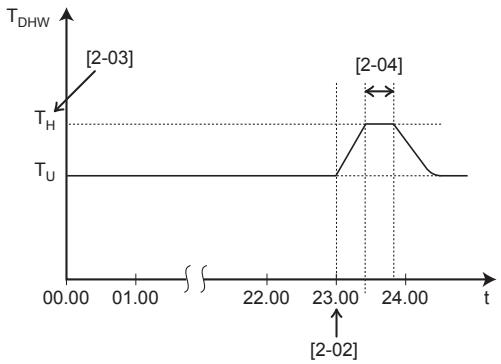

T_{DHW} Domestic hot water temperature
T_U User setpoint temperature
T_H High setpoint temperature [2-03]
t Time

WARNING

Be aware that the domestic hot water temperature at the hot water tap will be equal to the value selected in field setting [2-03] after a disinfection operation.

When the high domestic hot water temperature can be a potential risk for human injuries, a mixing valve (field supply) shall be installed at the hot water outlet connection of the domestic hot water tank. This mixing valve shall secure that the hot water temperature at the hot water tap never rise above a set maximum value. This maximum allowable hot water temperature shall be selected according to the applicable legislation.

CAUTION

Make sure that the disinfection function start time [5.7.3] with defined duration [5.7.5] is NOT interrupted by possible domestic hot water demand.

CAUTION

`BSH allowance schedule` [9.4.2] is used to restrict or allow booster heater operation based on a weekly program. Advice: In order to avoid unsuccessful disinfection function, at least allow the booster heater (by the weekly program) for minimum 4 hours starting from the scheduled start-up of disinfection. If the booster heater is restricted during disinfection, this function will NOT be successful and the applicable warning AH will be generated.

NOTICE

Disinfection mode. Even if you turn OFF tank heating operation ([C.3]: `Operation` > `Tank`), disinfection mode will remain active. However, if you turn it OFF while disinfection is running, an AH error occurs.

INFORMATION

In case of error code AH and no interruption of the disinfection function occurred due to domestic hot water tapping, following actions are recommended:

- When the `Reheat only` or `Schedule + reheat` mode is selected, it is recommended to program the start-up of the disinfection function at least 4 hours later than the last expected large hot water tapping. This start-up can be set by installer settings (disinfection function).
- When the `Schedule only` mode is selected, it is recommended to program an `Eco` action 3 hours before the scheduled start-up of the disinfection function to preheat the tank.

INFORMATION

Disinfection function is restarted in case the domestic hot water temperature drops 5°C below the disinfection target temperature within the duration time.

Maximum DHW temperature setpoint

The maximum temperature that users can select for the domestic hot water. You can use this setting to limit the temperatures at the hot water taps.

INFORMATION

During disinfection of the domestic hot water tank, the DHW temperature can exceed this maximum temperature.

INFORMATION

Limit the maximum hot water temperature according to the applicable legislation.

#	Code	Description
[5.8]	[6-0E]	`Maximum`: The maximum temperature that users can select for the domestic hot water. You can use this setting to limit the temperature at the hot water taps. The maximum temperature is NOT applicable during disinfection function. See disinfection function.

Hysteresis (heat pump ON hysteresis)

Applicable when domestic hot water preparation is reheat only. When the tank temperature drops below the reheat temperature minus the heat pump ON hysteresis temperature, the tank heats up to the reheat temperature.

The minimum ON temperature is 20°C, even if setpoint hysteresis is smaller than 20°C.

#	Code	Description
[5.9]	[6-00]	Heat pump ON hysteresis ▪ 2°C~40°C

Hysteresis (reheat hysteresis)

Applicable when domestic hot water preparation is scheduled+reheat. When the tank temperature drops below the reheat temperature minus the reheat hysteresis temperature, the tank heats up to the reheat temperature.

#	Code	Description
[5.A]	[6-08]	Reheat hysteresis ▪ 2°C~20°C

Setpoint mode

#	Code	Description
[5.B]	N/A	`Setpoint mode`: ▪ `Fixed` ▪ `Weather dependent`

WD curve

When weather-dependent operation is active the desired tank temperature is determined automatically depending on the averaged outdoor temperature: low outdoor temperatures will result in higher desired tank temperatures as the cold water tap is colder and vice versa.

In case of `Schedule only` or `Schedule + reheat` domestic hot water preparation, the storage comfort temperature is weather-dependent (according to the weather-dependent curve), the storage economic and reheat temperature are NOT weather-dependent.

In case of `Reheat only` domestic hot water preparation, the desired tank temperature is weather-dependent (according to the weather-dependent curve). During weather-dependent operation, the end-user cannot adjust the desired tank temperature on the user interface. Also see "10.5 Weather-dependent curve" [▸ 156].

#	Code	Description
[5.C]	[0-0E] [0-0D] [0-0C] [0-0B]	WD curve: **Note:** There are 2 methods to set the weather dependent curve. See "10.5.2 2-points curve" [▶ 156] and "10.5.3 Slope-offset curve" [▶ 157] for more information about the different curve types. Both curve types require 4 field settings to be configured according to the figure below. 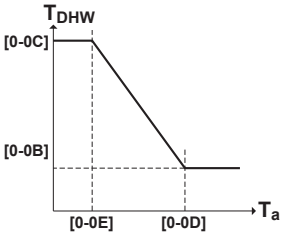 ▪ T_{DHW}: The desired tank temperature. ▪ T_a: The (averaged) outdoor ambient temperature ▪ [0-0E]: low outdoor ambient temperature: –40°C~5°C ▪ [0-0D]: high outdoor ambient temperature: 10°C~25°C ▪ [0-0C]: desired tank temperature when the outdoor temperature equals or drops below the low ambient temperature: 45°C~[6-0E]°C ▪ [0-0B]: desired tank temperature when the outdoor temperature equals or rises above the high ambient temperature: 35°C~[6-0E]°C

Margin

In domestic hot water operation, the following hysteresis value can be set for the heat pump operation:

#	Code	Description
[5.D]	[6-01]	The temperature difference determining the heat pump OFF temperature. Range: 0°C~10°C

Example: setpoint (T_U)>maximum heat pump temperature–[6-01] ($T_{HP\ MAX}$–[6-01])

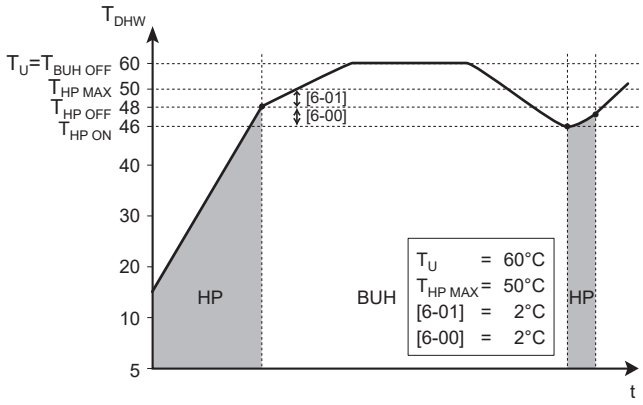

BUH Backup heater
HP Heat pump. If heating up time by the heat pump takes too long, auxiliary heating by the backup heater can take place
$T_{BUH\ OFF}$ Backup heater OFF temperature (T_U)
$T_{HP\ MAX}$ Maximum heat pump temperature at sensor in domestic hot water tank
$T_{HP\ OFF}$ Heat pump OFF temperature ($T_{HP\ MAX}$–[6-01])
$T_{HP\ ON}$ Heat pump ON temperature ($T_{HP\ OFF}$–[6-00])
T_{DHW} Domestic hot water temperature
T_U User setpoint temperature (as set on the user interface)
t Time

Example: setpoint (T_U)≤maximum heat pump temperature–[6-01] ($T_{HP\ MAX}$–[6-01])

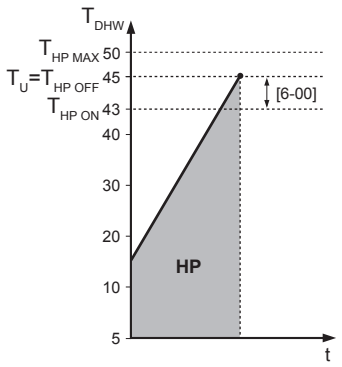

HP Heat pump. If heating up time by the heat pump takes too long, auxiliary heating by the backup heater can take place
$T_{HP\ MAX}$ Maximum heat pump temperature at sensor in domestic hot water tank
$T_{HP\ OFF}$ Heat pump OFF temperature ($T_{HP\ MAX}$–[6-01])
$T_{HP\ ON}$ Heat pump ON temperature ($T_{HP\ OFF}$–[6-00])
T_{DHW} Domestic hot water temperature
T_U User setpoint temperature (as set on the user interface)
t Time

INFORMATION

The maximum heat pump temperature depends on the ambient temperature. For more information, see the operation range.

WD curve type

There are 2 methods to define the weather-dependent curves:

- `2-points` (see "10.5.2 2-points curve" [▶ 156])
- `Slope-Offset` (see "10.5.3 Slope-offset curve" [▶ 157])

In [2.E] `WD curve type`, you can choose which method you want to use.

In [5.E] `WD curve type`, the chosen method is shown read-only (same value as in [2.E]).

#	Code	Description
[2.E] / [5.E]	N/A	▪ 0: `2-points` ▪ 1: `Slope-Offset`

10.6.7 User settings

Overview

The following items are listed in the submenu:

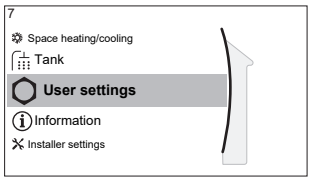

[7] `User settings`

[7.1] `Language`

[7.2] `Time/date`

[7.3] `Holiday`

[7.4] `Quiet`

[7.5] `Electricity price`

[7.6] `Gas price`

Language

#	Code	Description
[7.1]	N/A	Language

Time/date

#	Code	Description
[7.2]	N/A	Set the local time and date

INFORMATION

By default, daylight savings time is enabled and clock format is set to 24 hours. If you want to change these settings, you can do this in the menu structure (`User settings` > `Time/date`) once the unit is initialised.

Holiday

About holiday mode

During your holiday, you can use the holiday mode to deviate from your normal schedules without having to change them. While holiday mode is active, space heating/cooling operation and domestic hot water operation will be turned off. Room frost protection and disinfection operation will remain active.

Typical workflow

Using holiday mode typically consists of the following stages:

1 Activating the holiday mode.

2 Setting the starting date and ending date of your holiday.

To check if holiday mode is activated and/or running

If is displayed on the home screen, holiday mode is active.

To configure the holiday

1	Activate the holiday mode.	—
	▪ Go to [7.3.1]: `User settings` > `Holiday` > `Activation`. 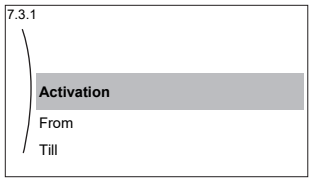	
	▪ Select `On`.	
2	Set the first day of your holiday.	—
	▪ Go to [7.3.2]: `From`.	
	▪ Select a date.	
	▪ Confirm the changes.	
3	Set the last day of your holiday.	—
	▪ Go to [7.3.3]: `Till`.	
	▪ Select a date.	
	▪ Confirm the changes.	

Quiet

About quiet mode

You can use quiet mode to decrease the sound of the outdoor unit. However, this also decreases the heating/cooling capacity of the system. There are multiple quiet mode levels.

The installer can:

- Completely deactivate quiet mode
- Manually activate a quiet mode level
- Enable the user to program a quiet mode schedule
- Configure restrictions based on local regulations

If enabled by the installer, the user can program a quiet mode schedule.

INFORMATION

If the outdoor temperature is below zero, we recommend to NOT use the most quiet level.

To check if quiet mode is active

If is displayed on the home screen, quiet mode is active.

To use quiet mode

1	Go to [7.4.1]: `User settings` > `Quiet` > `Mode`.	
2	Do one of the following:	—

If you want to...	Then...	
Completely deactivate quiet mode	Select `Off`. **Result:** The unit never runs in quiet mode. The user cannot change this.	
Manually activate a quiet mode level	Select `Manual`.	
	Go to [7.4.3] `Level` and select the applicable quiet mode level. **Example:** `Most quiet`. **Result:** The unit always runs in the selected quiet mode level. The user cannot change this.	
▪ Enable the user to program a quiet mode schedule, AND/OR ▪ Configure restrictions based on local regulations	Select `Automatic`. **Result:** ▪ The user (or you) can program the schedule in [7.4.2] `Schedule`. For more information about scheduling, see "10.4.3 Schedule screen: Example" [▶ 150]. ▪ You can configure restrictions in [7.4.4] `Restrictions`. See below. ▪ The possible outcomes for the quiet mode differ depending on the schedule (if programmed) and the restrictions (if enabled/defined). See below.	

To configure restrictions

1	Enable the restrictions. Go to [7.4.4.1]: `User settings` > `Quiet` > `Restrictions` > `Enable` and select `Yes`.	
2	Define the restrictions (time + level) to be used before midday (AM): ▪ [7.4.4.2] `AM Restricted time` **Example:** From 9 a.m. to 11 a.m. ▪ [7.4.4.3] `AM Restricted level` **Example:** `More quiet`	
3	Define the restrictions (time + level) to be used after midday (PM): ▪ [7.4.4.4] `PM Restricted time` **Example:** From 3 p.m. to 7 p.m. ▪ [7.4.4.5] `PM Restricted level` **Example:** `Most quiet`	

Possible outcomes when quiet mode is set to Automatic

If...			Then quiet mode =...
Restrictions enabled?	**Restrictions (time + level) defined?**	**Schedule programmed?**	
No	N/A	No	OFF
		Yes	Follows schedule
Yes	No	No	OFF
		Yes	Follows schedule
	Yes	No	Follows restriction
		Yes	▪ **During restricted time:** If restricted level is stricter than scheduled level, then follows restriction. Else, follows schedule. ▪ **Outside restricted time:** Follows schedule.

Electricity prices and gas price

Only applicable in combination with the bivalent function. See also "Bivalent" [▸ 220].

#	Code	Description
[7.5.1]	N/A	`Electricity price` > `High`
[7.5.2]	N/A	`Electricity price` > `Medium`
[7.5.3]	N/A	`Electricity price` > `Low`
[7.6]	N/A	`Gas price`

INFORMATION

Electricity price can only be set when bivalent is ON ([9.C.1] or [C-02]). These values can only be set in menu structure [7.5.1], [7.5.2] and [7.5.3]. Do NOT use overview settings.

To set the gas price

1	Go to [7.6]: `User settings` > `Gas price`.	
2	Select the correct gas price.	
3	Confirm the changes.	

INFORMATION

Price value ranging from 0.00~990 valuta/kWh (with 2 significant values).

To set the electricity price

1	Go to [7.5.1]/[7.5.2]/[7.5.3]: `User settings` > `Electricity price` > `High`/`Medium`/`Low`.	
2	Select the correct electricity price.	
3	Confirm the changes.	

4	Repeat this for all three electricity prices.	—

INFORMATION

Price value ranging from 0.00~990 valuta/kWh (with 2 significant values).

INFORMATION

If no schedule is set, the `Electricity price` for `High` is taken into account.

To set the electricity price schedule

1	Go to [7.5.4]: `User settings` > `Electricity price` > `Schedule`.	
2	Program the selection using the scheduling screen. You can set the `High`, `Medium` and `Low` electricity prices according to your electricity supplier.	—
3	Confirm the changes.	

INFORMATION

The values correspond with the electricity price values for `High`, `Medium` and `Low` previously set. If no schedule is set, the electricity price for `High` is taken into account.

About energy prices in case of an incentive per kWh renewable energy

An incentive can be taken into account when setting the energy prices. Although the running cost can increase, the total operation cost, taking into account the reimbursement will be optimized.

NOTICE

Make sure to modify the setting of the energy prices at the end of the incentive period.

To set the gas price in case of an incentive per kWh renewable energy

Calculate the value for the gas price with the following formula:

- Actual gas price+(Incentive/kWh×0.9)

For the procedure to set the gas price, see "To set the gas price" [▸ 200].

To set the electricity price in case of an incentive per kWh renewable energy

Calculate the value for the electricity price with following formula:

- Actual electricity price+Incentive/kWh

For the procedure to set the electricity price, see "To set the electricity price" [▸ 200].

Example

This is an example and the prices and/or values used in this example are NOT accurate.

Data	Price/kWh
Gas price	4.08
Electricity price	12.49
Renewable heat incentive per kWh	5

Calculation of the gas price

Gas price=Actual gas price+(Incentive/kWh×0.9)

Gas price=4.08+(5×0.9)

Gas price=8.58

Calculation of the electricity price

Electricity price=Actual electricity price+Incentive/kWh

Electricity price=12.49+5

Electricity price=17.49

Price	Value in breadcrumb
Gas: 4.08 /kWh	[7.6]=8.6
Electricity: 12.49 /kWh	[7.5.1]=17

10.6.8 Information

Overview

The following items are listed in the submenu:

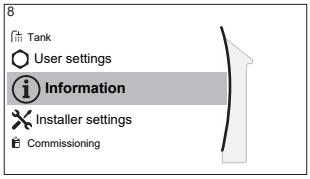

[8] Information

[8.1] Energy data

[8.2] Malfunction history

[8.3] Dealer information

[8.4] Sensors

[8.5] Actuators

[8.6] Operation modes

[8.7] About

[8.8] Connection status

[8.9] Running hours

[8.A] Reset

Dealer information

The installer can fill in his contact number here.

#	Code	Description
[8.3]	N/A	Number that users can call in case of problems.

Reset

Reset the configuration settings stored in the MMI (user interface of the indoor unit).

Example: Energy meterings, holiday settings.

INFORMATION

This does not reset the configuration settings and field settings of the indoor unit.

#	Code	Description
[8.A]	N/A	Reset the MMI EEPROM to factory default

Possible read-out information

In menu…	You can read out…
[8.1] `Energy data`	Produced energy, consumed electricity, and consumed gas
[8.2] `Malfunction history`	Malfunction history
[8.3] `Dealer information`	Contact/helpdesk number
[8.4] `Sensors`	Room temperature, outside temperature, leaving water temperature,…
[8.5] `Actuators`	Status/mode of each actuator **Example:** Unit pump ON/OFF
[8.6] `Operation modes`	Current operation mode **Example:** Defrost/oil return mode
[8.7] `About`	Version information about the system
[8.8] `Connection status`	Information about the connection status of the unit, the room thermostat and WLAN.
[8.9] `Running hours`	Running hours of specific system components

10.6.9 Installer settings

Overview

The following items are listed in the submenu:

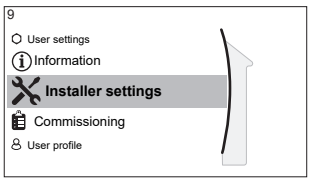

[9] Installer settings

[9.1] Configuration wizard
[9.2] Domestic hot water
[9.3] Backup heater
[9.4] Booster heater
[9.5] Emergency
[9.6] Balancing
[9.7] Water pipe freeze prevention
[9.8] Benefit kWh power supply
[9.9] Power consumption control
[9.A] Energy metering
[9.B] Sensors
[9.C] Bivalent
[9.D] Alarm output
[9.E] Auto restart
[9.F] Power saving function
[9.G] Disable protections
[9.H] Forced defrost
[9.I] Overview field settings
[9.N] Export MMI settings

Configuration wizard

After first power ON of the system, the user interface will guide you using the configuration wizard. This way you can set the most important initial settings. This way the unit will be able to run properly. Afterwards, more detailed settings can be done via the menu structure if required.

To restart the configuration wizard, go to Installer settings > Configuration wizard [9.1].

Domestic hot water

This part only applies to systems with an optional domestic hot water tank installed.

Domestic hot water

The following setting determines if the system can prepare domestic hot water or not, and which tank is used. Set this setting according to the actual installation.

#	Code	Description
[9.2.1]	[E-05][(a)] [E-06][(a)] [E-07][(a)]	▪ `No DHW` No tank installed. ▪ `EKHWS/E, small volume` Tank with booster heater installed at the side of the tank, with a volume of 150 l or 180 l. ▪ `EKHWS/E, big volume` Tank with booster heater installed at the side of the tank, with a volume of 200 l, 250 l or 300 l. ▪ `EKHWP/HYC` Tank with optional booster heater installed at the top of the tank. ▪ `3rd party, small coil` Third-party tank with a coil size larger than 1.05 m². ▪ `3rd party, big coil` Third-party tank with a coil size larger than 1.80 m².

(a) Do NOT use [E-05], [E-06] and [E-07] anymore as they are replaced by one menu structure setting [9.2.1].

In case of EKHWP, we recommend to use the following settings:

#	Code	Item	EKHWP
[9.2.1]	[E-07]	Tank type	5: `EKHWP/HYC`
N/A	[4-05]	Thermistor type	0: Automatic
[5.8]	[6-0E]	Maximum tank temperature	≤70°C

In case of EKHWS*D* / EKHWSU*D*, we recommend to use the following settings:

#	Code	Item	EKHWS*D* / EKHWSU*D*	
			150/180	200/250/300
[9.2.1]	[E-07]	Tank type	0: `EKHWS/E, small volume`	3: `EKHWS/E, big volume`
N/A	[4-05]	Thermistor type	0: Automatic	1: Type 1
[5.8]	[6-0E]	Maximum tank temperature	≤60°C	≤75°C

In case of a third-party tank, we recommend to use the following settings:

#	Code	Item	Third-party tank	
			Coil≥1.05 m²	Coil≥1.8 m²
[9.2.1]	[E-07]	Tank type	7: `3rd party, small coil`	8: `3rd party, big coil`
N/A	[4-05]	Thermistor type	0: Automatic	1: Type 1
[5.8]	[6-0E]	Maximum tank temperature	≤60°C	≤75°C

DHW pump

#	Code	Description
[9.2.2]	[D-02]	DHW pump: ▪ 0: No DHW pump: NOT installed ▪ 1: Instant hot water: Installed for instant hot water when water is tapped. The user sets the operation timing of the domestic hot water pump using the schedule. Control of this pump is possible with the user interface. ▪ 2: Disinfection: Installed for disinfection. It runs when the disinfection function of the domestic hot water tank is running. No further settings are needed.

See also:

- "6.4.4 DHW pump for instant hot water" [▸ 50]
- "6.4.5 DHW pump for disinfection" [▸ 50]

DHW pump schedule

Program a schedule for the DHW pump **(only for field supplied domestic hot water pump for secondary return).**

Program a domestic hot water pump schedule to determine when to turn on and off the pump.

When turned on, the pump runs and makes sure hot water is instantly available at the tap. To save energy, only turn on the pump during periods of the day when instant hot water is necessary.

Backup heater

Besides the type of backup heater, the voltage, configuration and capacity must be set on the user interface.

The capacities for the different steps of the backup heater must be set for the energy metering and/or power consumption feature to work properly. When measuring the resistance value of each heater, you can set the exact heater capacity and this will lead to more accurate energy data.

Backup heater type

The backup heater is adapted to be connected to most common European electricity grids. The type of backup heater must be set on the user interface. For units with a built-in backup heater, the type of heater can be viewed but not changed.

#	Code	Description
[9.3.1]	[E-03]	▪ 3: 6V ▪ 4: 9W

Voltage

- For a 6V model, this can be set to:
  - 230V, 1ph
  - 230V, 3ph
- For a 9W model, this is fixed to 400V, 3ph.

#	Code	Description
[9.3.2]	[5-0D]	▪ 0: 230V, 1ph ▪ 1: 230V, 3ph ▪ 2: 400V, 3ph

Configuration

The backup heater can be configured in different ways. It can be chosen to have a 1-step only backup heater or a backup heater with 2 steps. If 2 steps, the capacity of the second step depends on this setting. It can also be chosen to have a higher capacity of the second step in emergency.

#	Code	Description
[9.3.3]	[4-0A]	▪ 0: Relay 1 ▪ 1: Relay 1 / Relay 1+2 ▪ 2: Relay 1 / Relay 2 ▪ 3: Relay 1 / Relay 2 Emergency Relay 1+2

INFORMATION

Settings [9.3.3] and [9.3.5] are linked. Changing one setting influences the other. If you change one, check if the other is still as expected.

INFORMATION

During normal operation, e.g. when [4-0A]=1, the capacity of the second step of the backup heater at nominal voltage is equal to [6-03]+[6-04].

INFORMATION

If [4-0A]=3 and emergency mode is active, the power usage of the second step of the backup heater at nominal voltage is equal to [6-03]+[6-04].

Capacity step 1

#	Code	Description
[9.3.4]	[6-03]	▪ The capacity of the first element (Relay 1) of the backup heater at nominal voltage.

Additional capacity step 2

#	Code	Description
[9.3.5]	[6-04]	▪ The capacity of the second element (Relay 2) of the backup heater at nominal voltage.

Equilibrium

#	Code	Description
[9.3.6]	[5-00]	Equilibrium: Deactivate backup heater (or external backup heat source in case of a bivalent system) above the equilibrium temperature for space heating? ▪ 0: No ▪ 1: Yes

#	Code	Description
[9.3.7]	[5-01]	`Equilibrium temperature`: Outdoor temperature below which operation of the backup heater (or external backup heat source in case of a bivalent system) is allowed. Range: –15°C~35°C

Operation

#	Code	Description
[9.3.8]	[4-00]	`Backup heater`: ▪ 0: `Restricted`: Backup heater operation is disabled. ▪ 1: `Allowed`: Backup heater operation is enabled. ▪ 2: `Only DHW`: Backup heater operation is enabled for domestic hot water and disabled for space heating. Do NOT use this setting in case of wall-mounted units (EHBH/X, ETBH/X, ELBH/X, EBBH/X) and monobloc units (EB/DLA, EWA/YA).

INFORMATION

When heating of the DHW by the heat pump is too slow, it may affect a comfortable operation of the space heating/cooling circuit. If so, allow the backup heater to assist during DHW operation by setting [4-00]=1 or 2.

Emergency

Emergency

When the heat pump fails to operate, the backup heater and/or booster heater can serve as an emergency heater. It then takes over the heat load either automatically or by manual interaction.

- When `Emergency` is set to `Automatic` and a heat pump failure occurs, the backup heater automatically takes over the heat load, and the booster heater in the optional tank takes over the domestic hot water production.
- When `Emergency` is set to `Manual` and a heat pump failure occurs, the domestic hot water heating and space heating stops.

  To manually recover it via the user interface, go to the `Malfunctioning` main menu screen and confirm whether the backup heater and/or booster heater can take over the heat load or not.
- Alternatively, when `Emergency` is set to:
  - `auto SH reduced/DHW on`, space heating is reduced but domestic hot water is still available.
  - `auto SH reduced/DHW off`, space heating is reduced and domestic hot water is NOT available.
  - `auto SH normal/DHW off`, space heating operates as normally but domestic hot water is NOT available.

  Similarly as in `Manual` mode, the unit can take the full load with the backup heater and/or booster heater if the user activates this via the `Malfunctioning` main menu screen.

To keep energy consumption low, we recommend to set `Emergency` to `auto SH reduced/DHW off` if the house is unattended for longer periods.

#	Code	Description
[9.5.1]	[4-06]	▪ **0: `Manual`** ▪ 1: `Automatic` ▪ 2: `auto SH reduced/DHW on` ▪ 3: `auto SH reduced/DHW off` ▪ 4: `auto SH normal/DHW off`

INFORMATION

The auto emergency setting can be set in the menu structure of the user interface only.

INFORMATION

If [4-03]=1 or 3, then `Emergency` = `Manual` is not applicable for the booster heater.

INFORMATION

If a heat pump failure occurs and `Emergency` is not set to `Automatic` (setting 1), the following functions will remain active even if the user does NOT confirm emergency operation:

- Room frost protection
- Underfloor heating screed dryout

However, the disinfection function will be activated ONLY if the user confirms emergency operation via the user interface.

Compressor forced off

`Compressor forced off` mode can be activated to only allow the backup heater to provide domestic hot water and space heating. When this mode is activated:

- Heat pump operation is NOT possible
- Cooling is NOT possible

#	Code	Description
[9.5.2]	[7-06]	Activation of the `Compressor forced off` mode: ▪ 0: `disabled` ▪ 1: `enabled`

Balancing

Priorities

For systems with a separate domestic hot water tank.

#	Code	Description
[9.6.1]	[5-02]	`Space heating priority`: Defines whether domestic hot water is made by booster heater only when outdoor temperature is below space heating priority temperature. It is recommended to enable this function to shorten tank heating operation time and guaranteed domestic hot water comfort. ▪ 0: `Off` ▪ 1: `On` [5-01] Equilibrium temperature and [5-03] Space heating priority temperature are related to backup heater. So, you must set [5-03] equal or a few degrees higher than [5-01].
[9.6.2]	[5-03]	`Priority temperature`: Defines the outdoor temperature which below the domestic hot water will be heated by booster heater only. Range: –15°C~35°C
[9.6.3]	[5-04]	`Offset BSH setpoint`: Setpoint correction for domestic hot water temperature: setpoint correction for the desired domestic hot water temperature, to be applied at low outdoor temperature when space heating priority is enabled. The corrected (higher) setpoint will make sure that the total heat capacity of the water in the tank remains approximately unchanged, by compensating for the colder bottom water layer of the tank (because the heat exchanger coil is not operational) with a warmer top layer. Range: 0°C~20°C

Timers

For simultaneous space and domestic hot water operation request.

[8-02]: `Anti-recycle timer`

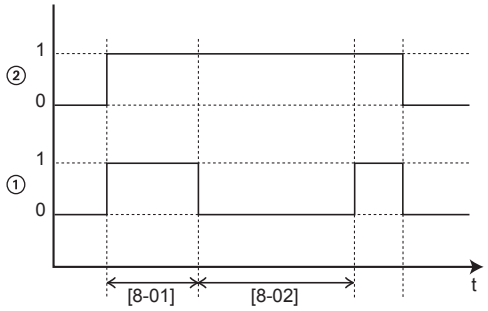

1 Heat pump domestic water heating mode (1=active, 0=not active)
2 Hot water request for heat pump (1=request, 0=no request)
t Time

[8-04]: `Additional timer` at [4-02]/[F-01]

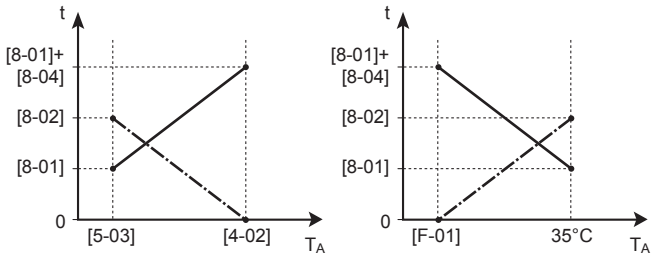

T_A Ambient (outdoor) temperature
t Time
`Anti-recycle timer`
Maximum running time domestic hot water

#	Code	Description
[9.6.4]	[8-02]	`Anti-recycle timer`: Minimum time between two cycles for domestic hot water. The actual anti-recycling time also depends on setting [8-04]. Range: 0~10 hours **Remark:** The minimum time is 0.5 hours even when the selected value is 0.
[9.6.5]	N/A	`Minimum running timer`: Do NOT change.
[9.6.6]	[8-01]	`Maximum running timer` for domestic hot water operation. Domestic hot water heating stops even when the target domestic hot water temperature is NOT reached. The actual maximum running time also depends on setting [8-04]. ▪ When `Control=Room thermostat`: This preset value is only taken into account if there is a request for space heating or cooling. If there is NO request for space heating/cooling, the tank is heated until the setpoint has been reached. ▪ When `Control≠Room thermostat`: This preset value is always taken into account. Range: 5~95 minutes
[9.6.7]	[8-04]	`Additional timer`: Additional running time for the maximum running time depending on the outdoor temperature [4-02] or [F-01]. Range: 0~95 minutes

Water pipe freeze prevention

Only relevant for installations with water piping outdoors. This function tries to protect outdoor water piping from freezing.

#	Code	Description
[9.7]	[4-04]	`Water pipe freeze prevention`: ▪ 0: `Continuous pump operation` ▪ 1: `Non continuous pump operation` ▪ 2: `Off`

Benefit kWh power supply

#	Code	Description
[9.8.2]	[D-00]	**Restriction:** Only applicable if [9.8.4] is NOT set to `Smart Grid`. `Allow heater`: Which heaters are allowed to operate during preferential kWh rate power supply? ▪ 0 `No`: None ▪ 1 `Only BSH`: Booster heater only ▪ 2 `Only BUH`: Backup heater only ▪ 3 `All`: All heaters See also below table (Allowed heaters during preferential kWh rate power supply). Setting 2 is only meaningful if the preferential kWh rate power supply is of type 1 or the hydro module is connected to a separate normal kWh rate power supply (via X2M/5-6) and the backup heater is NOT connected to the preferential kWh rate power supply.
[9.8.3]	[D-05]	**Restriction:** Only applicable if [9.8.4] is NOT set to `Smart Grid`. `Allow pump`: ▪ 0 `No`: Pump is forced off ▪ 1 `Yes`: No limitation
[9.8.4]	[D-01]	Connection to a `Benefit kWh power supply` or a `Smart Grid`: ▪ 0 `No`: The outdoor unit is connected to a normal power supply. ▪ 1 `Open`: The outdoor unit is connected to a preferential kWh rate power supply. When the preferential kWh rate signal is sent by the electricity company, the contact will open and the unit will go in forced off mode. When the signal is released again, the voltage-free contact will close and the unit will restart operation. Therefore, always enable the auto restart function. ▪ 2 `Closed`: The outdoor unit is connected to a preferential kWh rate power supply. When the preferential kWh rate signal is sent by the electricity company, the contact will close and the unit will go in forced off mode. When the signal is released again, the voltage-free contact will open and the unit will restart operation. Therefore, always enable the auto restart function. ▪ 3 `Smart Grid`: A Smart Grid is connected to the system

#	Code	Description
[9.8.5]	N/A	**Restriction:** Only applicable if [9.8.4]=`Smart Grid`. Shows the Smart Grid operation mode sent by the 2 incoming Smart Grid contacts. `Smart Grid operation mode`: ▪ `Free running` ▪ `Forced off` ▪ `Recommended on` ▪ `Forced on` See also below table (Smart Grid operation modes).
[9.8.6]	N/A	**Restriction:** Only applicable if: ▪ [9.8.4]=`Smart Grid`, and ▪ `Smart Grid operation mode`=`Recommended on`. To set if electrical heaters are allowed. `Allow electrical heaters`: ▪ `No` ▪ `Yes`
[9.8.7]	N/A	**Restriction:** Only applicable in case of room thermostat control, and if: ▪ [9.8.4]=`Smart Grid`, and ▪ `Smart Grid operation mode`=`Recommended on`. To set if room buffering will be enabled. `Enable room buffering`: ▪ `No`: The extra energy from the photovoltaic panels is only buffered in the DHW tank (i.e. heat up the DHW tank). ▪ `Yes`: The extra energy from the photovoltaic panels is buffered in the DHW tank, and in the space heating/cooling circuit (i.e. heat up or cool down the room).

#	Code	Description
[9.8.8]	N/A	`Limit setting kW` **Restriction:** Only applicable if: ▪ [9.8.4]=`Smart Grid`. ▪ There is no pulse meter (power meter) for photovoltaic panels available ([9.A.2] `Electricity meter 2` = `None`) Normally, when a pulse meter is available, the following happens: ▪ The pulse meter measures the power produced by the photovoltaic panels. ▪ The unit limits its power consumption during the Smart Grid's "Recommended ON" mode to only use the power provided by the photovoltaic panels. However, when the pulse meter is not available, you can still limit the unit's power consumption using this setting (`Limit setting kW`). This prevents overconsumption and thus requiring the use of power from the grid.

Allowed heaters during preferential kWh rate power supply

[D-00]	Booster heater	Backup heater	Compressor
0	Forced OFF	Forced OFF	Forced OFF
1	Permitted		
2	Forced OFF	Permitted	
3	Permitted		

Smart Grid operation modes

The 2 incoming Smart Grid contacts (see "9.3.11 Smart Grid" [▸ 129]) can activate the following modes:

❶	❷	SG ready 1.0 operation mode
0	0	`Free running`
0	1	`Forced off`
1	0	`Recommended on`
1	1	`Forced on`

❶	❷	SG ready 1.1 operation mode
0	1	Operating state 1 (for a description, see SG ready 1.0: "`Forced off`")
0	0	Operating state 2 (for a description, see SG ready 1.0: "`Free running`")
1	0	Operating state 3 (for a description, see SG ready 1.0: "`Recommended on`")

`Free running`:

The Smart Grid function is NOT active.

`Forced off`:

- The unit forces OFF the compressor and the heaters (backup heater, booster heater).
- The protective functions (room frost protection, tank disinfection) and defrost are NOT overruled (capacity will not be limited for these functions)

Also see "Protective functions" [▸ 224].

`Recommended on`:

- In case the space heating/cooling request is OFF and the tank temperature setpoint is reached, the unit can choose to buffer energy from the photovoltaic panels in the room (only in case of room thermostat control) or in the DHW tank instead of putting the photovoltaic panel energy on the grid.

  In case of room buffering, the room will heat up or cool down to the comfort setpoint. In case of tank buffering, the tank will heat up to the maximum tank temperature.
- The goal is to buffer the energy from the photovoltaic panels. Therefore, the capacity of the unit is limited to what the photovoltaic panels are providing:

If Smart Grid pulse meter is…	Then the limit is…
Available	Decided by the unit based on the input of the Smart Grid pulse meter.
Not available	Decided by [9.8.8] `Limit setting kW`

- The protective functions (room frost protection, tank disinfection) and defrost are NOT overruled (capacity will not be limited for these functions)

Also see "Protective functions" [▸ 224].

`Forced on`:

Similar to `Recommended on`, but there is no capacity limitation. The goal is NOT to use the grid as much as possible.

Note: In case of smart grid signal = `Forced on`:

- room buffering will switch on even when room buffering is disabled,
- electrical heaters will be switched on even when electrical heaters are disabled.

Emergency mode. In case emergency mode is active, buffering with electrical heater is NOT possible in `Forced on` and `Recommended on` operation modes.

Power consumption control

Power consumption control

See "6 Application guidelines" [▸ 31] for detailed information about this functionality.

#	Code	Description
[9.9.1]	[4-08]	`Power consumption control`: ▪ 0 **No**: Disabled. ▪ 1 **Continuous**: Enabled: You can set one power limitation value (in A or kW) to which the system power consumption will be limited for all the time. ▪ 2 **Inputs**: Enabled: You can set up to four different power limitation values (in A or kW) to which the system power consumption will be limited when the corresponding digital input asks.
[9.9.2]	[4-09]	`Type`: ▪ 0 **Amp**: The limitation values are set in A. ▪ 1 **kW**: The limitation values are set in kW.

Limit when [9.9.1]=**Continuous** and [9.9.2]=**Amp**:

#	Code	Description
[9.9.3]	[5-05]	**Limit**: Only applicable in case of full time current limitation mode. 0 A~50 A

Limits when [9.9.1]=**Inputs** and [9.9.2]=**Amp**:

#	Code	Description
[9.9.4]	[5-05]	**Limit 1**: 0 A~50 A
[9.9.5]	[5-06]	**Limit 2**: 0 A~50 A
[9.9.6]	[5-07]	**Limit 3**: 0 A~50 A
[9.9.7]	[5-08]	**Limit 4**: 0 A~50 A

Limit when [9.9.1]=**Continuous** and [9.9.2]=**kW**:

#	Code	Description
[9.9.8]	[5-09]	**Limit**: Only applicable in case of full time power limitation mode. 0 kW~20 kW

Limits when [9.9.1]=**Inputs** and [9.9.2]=**kW**:

#	Code	Description
[9.9.9]	[5-09]	**Limit 1**: 0 kW~20 kW
[9.9.A]	[5-0A]	**Limit 2**: 0 kW~20 kW
[9.9.B]	[5-0B]	**Limit 3**: 0 kW~20 kW
[9.9.C]	[5-0C]	**Limit 4**: 0 kW~20 kW

Priority heater

#	Code	Description
[9.9.D]	[4-01]	**Power consumption control DISABLED [4-08]=0** ▪ 0 None : Backup heater and booster heater can operate simultaneously. ▪ 1 Booster heater: The booster heater is prioritised. ▪ 2 Backup heater: The backup heater is prioritised. **Power consumption control ENABLED [4-08]=1/2** ▪ 0 None : Depending on the power limitation level, the booster heater will be limited first, before the backup heater is limited. ▪ 1 Booster heater: Depending on the power limitation level, the backup heater will be limited first, before the booster heater is limited. ▪ 2 Backup heater: Depending on the power limitation level, the booster heater will be limited first, before the backup heater is limited.

Note: In case power consumption control is DISABLED (for all models) the setting [4-01] defines whether backup heater and booster heater can operate simultaneously, or if the booster heater/backup heater has priority over the backup heater/booster heater.

In case power consumption control is ENABLED, the setting [4-01] defines the priority of the electrical heaters depending on applicable limitation.

BBR16

See "6.6.4 BBR16 power limitation" [▸ 59] for detailed information about this functionality.

INFORMATION

Restriction: BBR16 settings are only visible when the language of the user interface is set to Swedish.

NOTICE

2 weeks to change. After you activated BBR16, you only have 2 weeks to change its settings (**BBR16 activation** and **BBR16 power limit**). After 2 weeks, the unit freezes these settings.

Note: This is different from the permanent power limitation, which is always changeable.

BBR16 activation

#	Code	Description
[9.9.F]	[7-07]	BBR16 activation: ▪ 0: disabled ▪ 1: enabled

BBR16 power limit

#	Code	Description
[9.9.G]	[N/A]	`BBR16 power limit`: This setting can only be modified via the menu structure. ▪ 0 kW~25 kW, step 0.1 kW

Energy metering

Energy metering

If energy metering is performed by the use of external power meters, configure the settings as described below. Select the pulse frequency output of each power meter in accordance with the power meter specifications. It is possible to connect up to 2 power meters with different pulse frequencies. If only 1 or no power meter is used, select '**None**' to indicate the corresponding pulse input is NOT used.

#	Code	Description
[9.A.1]	[D-08]	`Electricity meter 1`: ▪ 0 **None**: NOT installed ▪ 1 **1/10kWh**: Installed ▪ 2 **1/kWh**: Installed ▪ 3 **10/kWh**: Installed ▪ 4 **100/kWh**: Installed ▪ 5 **1000/kWh**: Installed
[9.A.2]	[D-09]	`Electricity meter 2`: ▪ 0 **None**: NOT installed ▪ 1 **1/10kWh**: Installed ▪ 2 **1/kWh**: Installed ▪ 3 **10/kWh**: Installed ▪ 4 **100/kWh**: Installed ▪ 5 **1000/kWh**: Installed In case of pulse meter for photovoltaic panels: ▪ 6 **100/kWh for PV panel**: Installed ▪ 7 **1000/kWh for PV panel**: Installed

Sensors

External sensor

#	Code	Description
[9.B.1]	[C–08]	`External sensor`: When an optional external ambient sensor is connected, the type of the sensor must be set. ▪ 0 `None` : NOT installed. The thermistor in the user interface and in the outdoor unit are used for measurement. ▪ 1 `Outdoor`: Connected to PCB of the indoor unit measuring the **outdoor temperature**. **Remark:** For some functionality, the temperature sensor in the outdoor unit is still used. ▪ 2 `Room`: Connected to PCB of the indoor unit measuring the **indoor temperature**. The temperature sensor in the user interface is NOT used anymore. **Remark:** This value has only meaning in room thermostat control.

Ext. amb. sensor offset

ONLY applicable in case an external outdoor ambient sensor is connected and configured.

You can calibrate the external outdoor ambient temperature sensor. It is possible to give an offset to the thermistor value. This setting can be used to compensate for situations where the external outdoor ambient sensor cannot be installed on the ideal installation location.

#	Code	Description
[9.B.2]	[2-0B]	`Ext. amb. sensor offset`: Offset on the ambient temperature measured on the external outdoor temperature sensor. ▪ –5°C~5°C, step 0.5°C

Averaging time

The average timer corrects the influence of ambient temperature variations. The weather-dependent setpoint calculation is done on the average outdoor temperature.

The outdoor temperature is averaged over the selected time period.

#	Code	Description
[9.B.3]	[1-0A]	`Averaging time`: ▪ 0: No averaging ▪ 1: 12 hours ▪ 2: 24 hours ▪ 3: 48 hours ▪ 4: 72 hours

Bivalent

Bivalent

Only applicable in case of auxiliary boiler.

NOTICE

Bivalent operation is only possible if:

- Space heating is turned ON, and
- DHW tank operation is turned OFF.

INFORMATION

Bivalent is ONLY possible in case of ONE leaving water temperature zone with:

- room thermostat control, OR
- external room thermostat control.

About bivalent

The purpose of this function is to determine which heating source can/will provide the space heating, either the heat pump system or the auxiliary boiler.

#	Code	Description
[9.C.1]	[C-02]	`Bivalent`: Indicates if the space heating is also performed by means of another heat source than the system. ▪ 0 **No**: Not installed ▪ 1 `Yes`: Installed. The auxiliary boiler (gas boiler, oil burner) will operate in space heating when the outdoor ambient temperature is low. During bivalent operation, the heat pump will run in domestic hot water operation when tank heat-up is required, or is turned OFF. Set this value in case an auxiliary boiler is used.

- If `Bivalent` is enabled: When the outdoor temperature drops below the bivalent ON temperature (fixed or variable based on energy prices), the space heating by the heat pump stops automatically and the permission signal for the auxiliary boiler is active.
- If `Bivalent` is disabled: Space heating is only done by the heat pump within the operation range. The permission signal for the auxiliary boiler is always inactive.

The switch-over between the heat pump system and the auxiliary boiler is based on the following settings:

- [C-03] and [C-04]
- Electricity price: [7.5.1], [7.5.2], [7.5.3]
- Gas price: [7.6]

[C-03], [C-04], and T_{calc}

Based on the settings above, the heat pump system calculates a value T_{calc}, which is variable between [C-03] and [C-03]+[C-04].

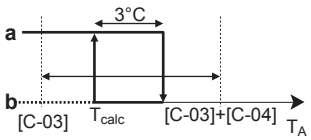

T_A Outdoor temperature
T_{calc} Bivalent ON temperature (variable). Below this temperature, the auxiliary boiler will always be ON. T_{calc} can never go below [C-03] or above [C-03]+[C-04].
3°C Fixed hysteresis to prevent too much switching between heat pump system and auxiliary boiler
a Auxiliary boiler active
b Auxiliary boiler inactive

If the outdoor temperature…	Then…	
	Space heating by the heat pump system…	Bivalent signal for the auxiliary boiler is…
Drops below T_{calc}	Stops	Active
Rises above T_{calc}+3°C	Starts	Inactive

INFORMATION

The permission signal for the auxiliary boiler is located on the EKRP1HBAA (digital I/O PCB). When it is activated, the contact X1, X2 is closed and open when it is deactivated. See illustration below for the schematic location of this contact.

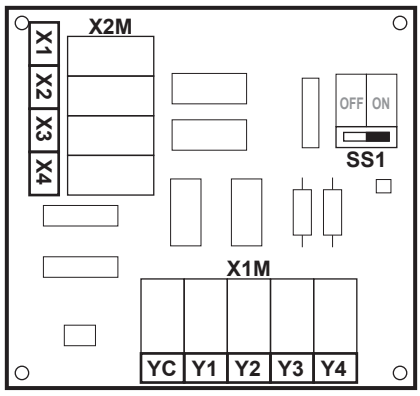

#	Code	Description
9.C.3	[C-03]	Range: –25°C~25°C (step: 1°C)
9.C.4	[C-04]	Range: 2°C~10°C (step: 1°C) The higher the value of [C-04], the higher the accuracy of the switch-over between the heat pump system and the auxiliary boiler.

To determine the value of [C-03], proceed as follows:

1 Determine the COP (= coefficient of performance) using the formula:

Formula	Example
COP = (Electricity price / gas price)[(a)] × boiler efficiency	If: ▪ Electricity price: 20 c€/kWh ▪ Gas price: 6 c€/kWh ▪ Boiler efficiency: 0.9 Then: COP = (20/6)×0.9 = **3**

[(a)] Make sure to use the same units of measurement for the electricity price and gas price (example: both c€/kWh).

2 Determine the value of [C-03] using the graph. For an example, see the table legend.

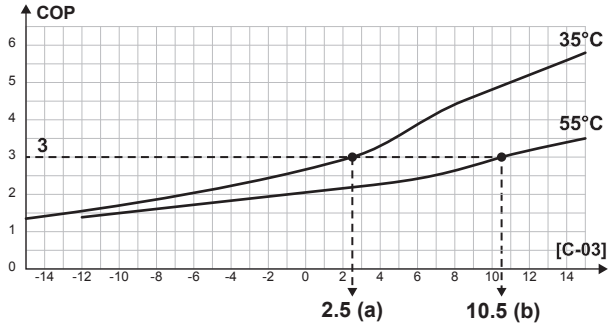

a [C-03]=2.5 in case of COP=3 and LWT=35°C
b [C-03]=10.5 in case of COP=3 and LWT=55°C

NOTICE

Make sure to set the value of [5-01] at least 1°C higher than the value of [C-03].

Electricity and gas prices

INFORMATION

To set electricity and gas price values, do NOT use overview settings. Set them in the menu structure instead ([7.5.1], [7.5.2], [7.5.3], and [7.6]). For more information on how to set the energy prices, see the operation manual and the user reference guide.

INFORMATION

Solar panels. If solar panels are used, set the electricity price value very low to promote the use of the heat pump.

#	Code	Description
[7.5.1]	N/A	`User settings` > `Electricity price` > `High`
[7.5.2]	N/A	`User settings` > `Electricity price` > `Medium`
[7.5.3]	N/A	`User settings` > `Electricity price` > `Low`
[7.6]	N/A	`User settings` > `Gas price`

Boiler efficiency

Depending on the used boiler, this should be chosen as follows:

#	Code	Description
[9.C.2]	[7-05]	▪ 0: `Very high` ▪ 1: `High` ▪ 2: `Medium` ▪ 3: `Low` ▪ 4: `Very low`

Alarm output

Alarm output

#	Code	Description
[9.D]	[C–09]	`Alarm output`: Indicates the logic of alarm output on digital I/O PCB during high level indoor unit error malfunctioning. Low level errors (caution/warning) will NOT be transmitted to alarm output. ▪ 0 `Abnormal`: The alarm output will be powered when an alarm occurs. By setting this value, a distinction is made between the detection of an alarm, and the detection of a power failure. ▪ 1 `Normal`: The alarm output will NOT be powered when an alarm occurs. See also table below (Alarm output logic).

Alarm output logic

[C-09]	Alarm	No alarm	No power supply to unit
0	Closed output	Open output	Open output
1	Open output	Closed output	

Auto restart

Auto restart

When power returns after a power supply failure, the auto restart function reapplies the user interface settings at the time of the power failure. Therefore, it is recommended to always enable the function.

If the preferential kWh rate power supply is of the type that power supply is interrupted, always enable the auto restart function. Continuous indoor unit control can be guaranteed independent of the preferential kWh rate power supply status, by connecting the indoor unit to a separate normal kWh rate power supply.

#	Code	Description
[9.E]	[3-00]	`Auto restart`: ▪ 0: `Manual` ▪ 1: `Automatic`

Power saving function

Power saving function

Defines whether the outdoor unit power supply can be interrupted (internally by indoor unit control) during stand-still conditions (no space heating/cooling nor domestic hot water demand). The final decision to allow power interruption of the outdoor unit during standstill depends on the ambient temperature, compressor conditions and minimum internal timers.

To enable the power saving function setting, [E-08] needs to be enabled on the user interface.

#	Code	Description
[9.F]	[E-08]	`Power saving function` for outdoor unit: ▪ 0: `No` ▪ 1: `Yes`

Disable protections

Protective functions

The unit is equipped with the following protective functions:

- Room antifrost [2-06]
- Tank disinfection [2-01]

INFORMATION

Protective functions – "Installer-on-site mode". The software is equipped with protective functions, such as room antifrost. The unit automatically runs these functions when necessary.

During installation or service this behaviour is undesired. Therefore, the protective functions can be disabled:

- **At first power-on:** The protective functions are disabled by default. After 12 hours they will be automatically enabled.
- **Afterwards:** An installer can manually disable the protective functions by setting [9.G]: `Disable protections`=`Yes`. After his work is done, he can enable the protective functions by setting [9.G]: `Disable protections`=`No`.

#	Code	Description
[9.G]	N/A	`Disable protections`: ▪ 0: `No` ▪ 1: `Yes`

Forced defrost

Forced defrost

Manually start a defrost operation. The forced defrost will only start when at least the following conditions are fulfilled:

- Unit is in heating operation and has been running for a few minutes
- Outdoor ambient temperature is low enough
- Temperature at the outdoor unit heat exchanger coil is low enough

#	Code	Description
[9.H]	N/A	Do you want to start a defrost operation? ▪ `Back` ▪ `OK`

NOTICE

Forced defrost start-up. You can only start forced defrost when the heating operation has been running for a while.

Overview field settings

Almost all settings can be done using the menu structure. If for any reason it is required to change a setting using the overview settings, then the overview

settings can be accessed in [9.I] `Overview field settings`. See "To modify an overview setting" [▸ 137].

Export MMI settings

About exporting the configuration settings

Export the configuration settings of the unit to a USB memory stick, via the MMI (the user interface of the indoor unit). When troubleshooting, these settings can be provided to our Service department.

#	Code	Description
[9.N]	N/A	`Your MMI settings will be exported to the connected storage device`: ▪ `Back` ▪ `OK`

To export MMI settings

1	Open the front panel (1) and the user interface panel (2) (see "7.2.4 To open the indoor unit" [▸ 72]): 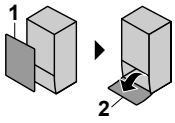	—
2	Insert a USB memory stick. 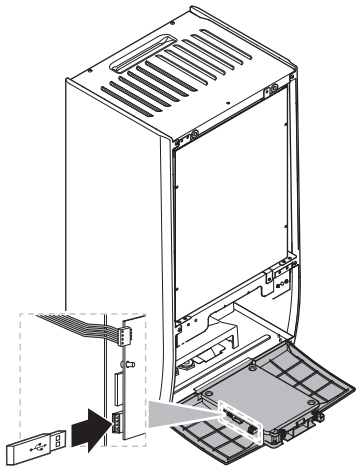	—
3	On the user interface, go to [9.N] `Export MMI settings`.	
4	Select `OK`.	
5	Remove the USB memory stick and close the user interface panel and front panel.	—

10.6.10 Commissioning

Overview

The following items are listed in the submenu:

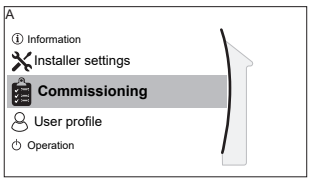

[A] `Commissioning`

[A.1] `Operation test run`

[A.2] `Actuator test run`

[A.3] `Air purge`

[A.4] `UFH screed dryout`

About commissioning

See: "11 Commissioning" [▸ 232]

10.6.11 User profile

[B] `User profile`: See "To change the user permission level" [▸ 136].

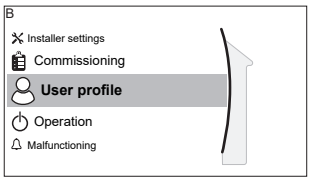

[B] `User profile`

10.6.12 Operation

Overview

The following items are listed in the submenu:

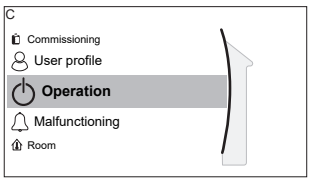

[C] `Operation`

[C.2] `Space heating/cooling`

[C.3] `Tank`

To enable or disable functionalities

In the operation menu, you can separately enable or disable functionalities of the unit.

#	Code	Description
[C.2]	N/A	`Space heating/cooling`: ▪ 0: `Off` ▪ 1: `On`
[C.3]	N/A	`Tank`: ▪ 0: `Off` ▪ 1: `On`

10.6.13 WLAN

INFORMATION

Restriction: WLAN settings are only visible when a WLAN cartridge or WLAN module is installed.

Overview

The following items are listed in the submenu:

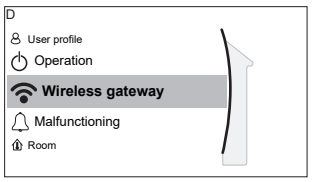

[D] Wireless gateway

[D.1] Enable AP mode

[D.2] Reboot

[D.3] WPS

[D.4] Remove from cloud

[D.5] Home network connection

[D.6] Cloud connection

About the WLAN cartridge or WLAN module

The WLAN cartridge or WLAN module (only one of the two needed) connects the system to the internet. The user can then control the system via the ONECTA app.

This needs the following components **in case of WLAN cartridge**:

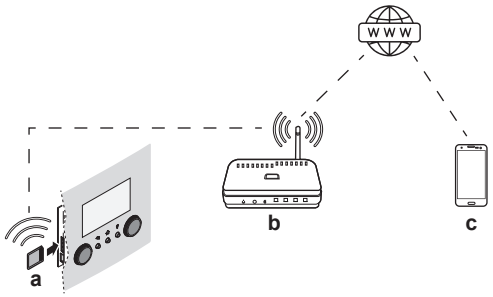

This needs the following components **in case of WLAN module**:

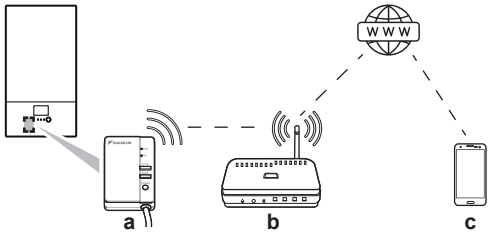

a	WLAN cartridge	The WLAN cartridge needs to be inserted in the user interface. See the installation manual of the WLAN cartridge.
	WLAN module	The WLAN module needs to be installed by the installer on the indoor unit (on the inside of the front panel). See: ▪ Installation manual of the WLAN module ▪ Addendum book for optional equipment
b	Router	Field supply.
c	Smartphone + app	The ONECTA app needs to be installed on the user's smartphone. See: http://www.onlinecontroller.daikineurope.com/

Configuration

To configure the ONECTA app, follow the in-app instructions. While doing this, the following actions and information ([D.1]~[D.6]) are needed on the user interface:

[D.1] `Enable AP mode`: Make the WLAN cartridge/module active as access point.

#	Code	Description
[D.1]	N/A	This setting generates a random SSID and key (+ QR code) needed by the ONECTA app: 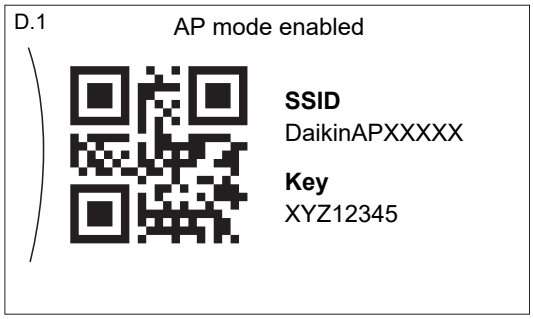 This screen exits automatically after 10 min, or when you press ⌂ or ↰ (and confirm): 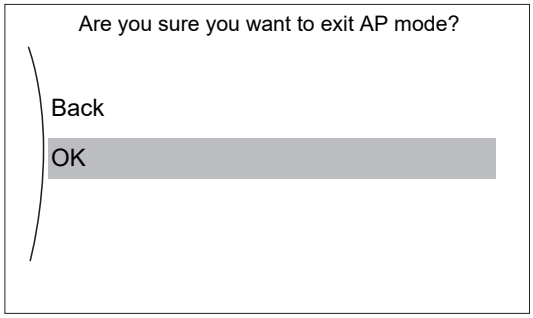

[D.2] `Reboot`: Reboot the WLAN cartridge/module.

#	Code	Description
[D.2]	N/A	`Reboot the gateway`: ▪ `Back` ▪ `OK`

[D.3] `WPS`: Connect the WLAN cartridge/module to the router.

#	Code	Description
[D.3]	N/A	`WPS`: ▪ `No` ▪ `Yes`

INFORMATION

You can only use this function if it is supported by the software version of the WLAN, and the software version of the ONECTA app.

[D.4] `Remove from cloud`: Remove the WLAN cartridge/module from the cloud.

#	Code	Description
[D.4]	N/A	`Remove from cloud`: ▪ `No` ▪ `Yes`

[D.5] `Home network connection`: Read out the status of the connection to the home network.

#	Code	Description
[D.5]	N/A	`Home network connection`: ▪ `Disconnected from` [WLAN_SSID] ▪ `Connected to` [WLAN_SSID]

[D.6] `Cloud connection`: Read out the status of the connection to the cloud.

#	Code	Description
[D.6]	N/A	`Cloud connection`: ▪ `Not connected` ▪ `Connected`

10.7 Menu structure: Overview user settings

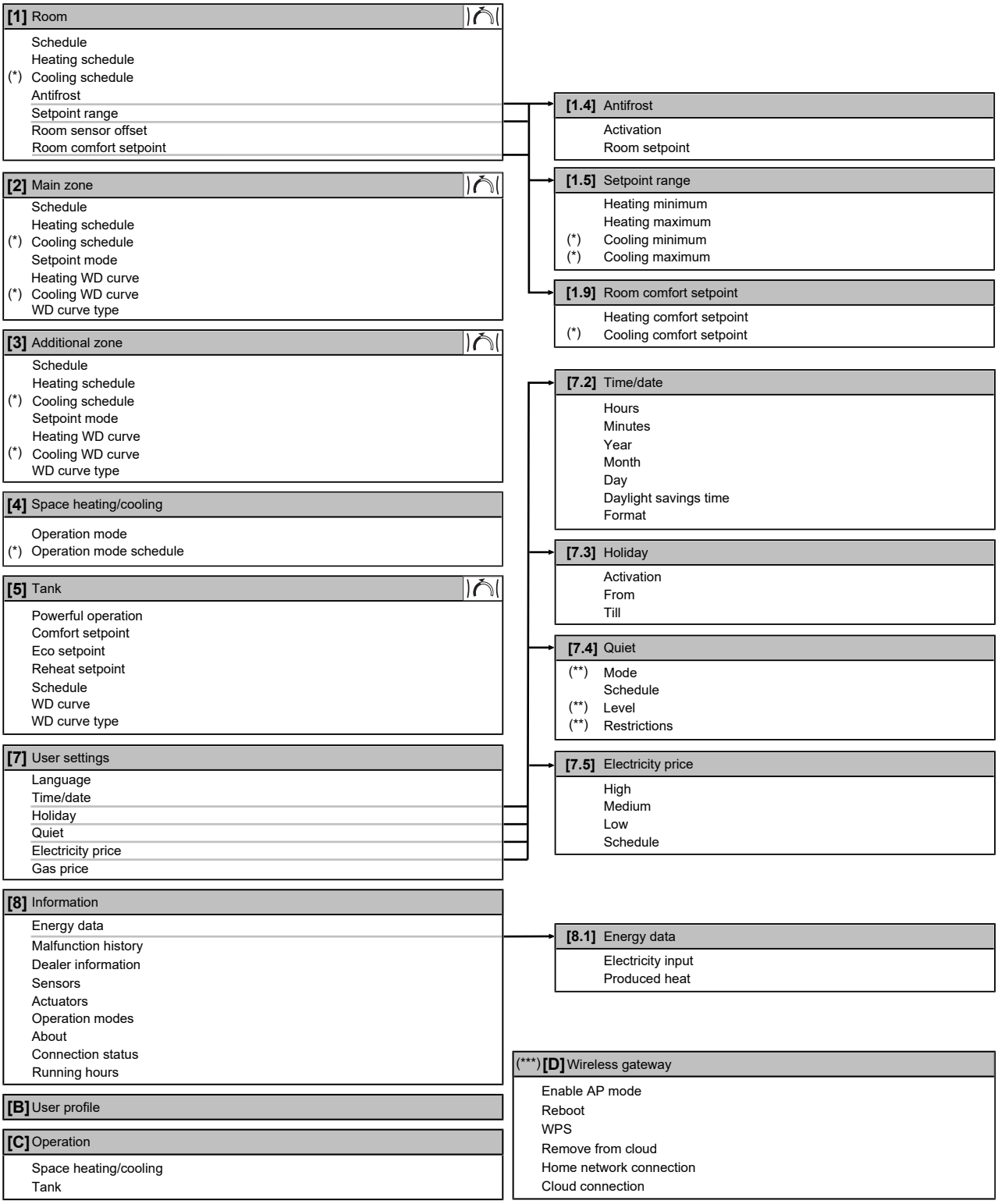

Setpoint screen
(*) Only applicable for models where cooling is possible
(**) Only accessible by installer
(***) Only applicable when WLAN is installed

> **INFORMATION**
> Depending on the selected installer settings and unit type, settings will be visible/ invisible.

10.8 Menu structure: Overview installer settings

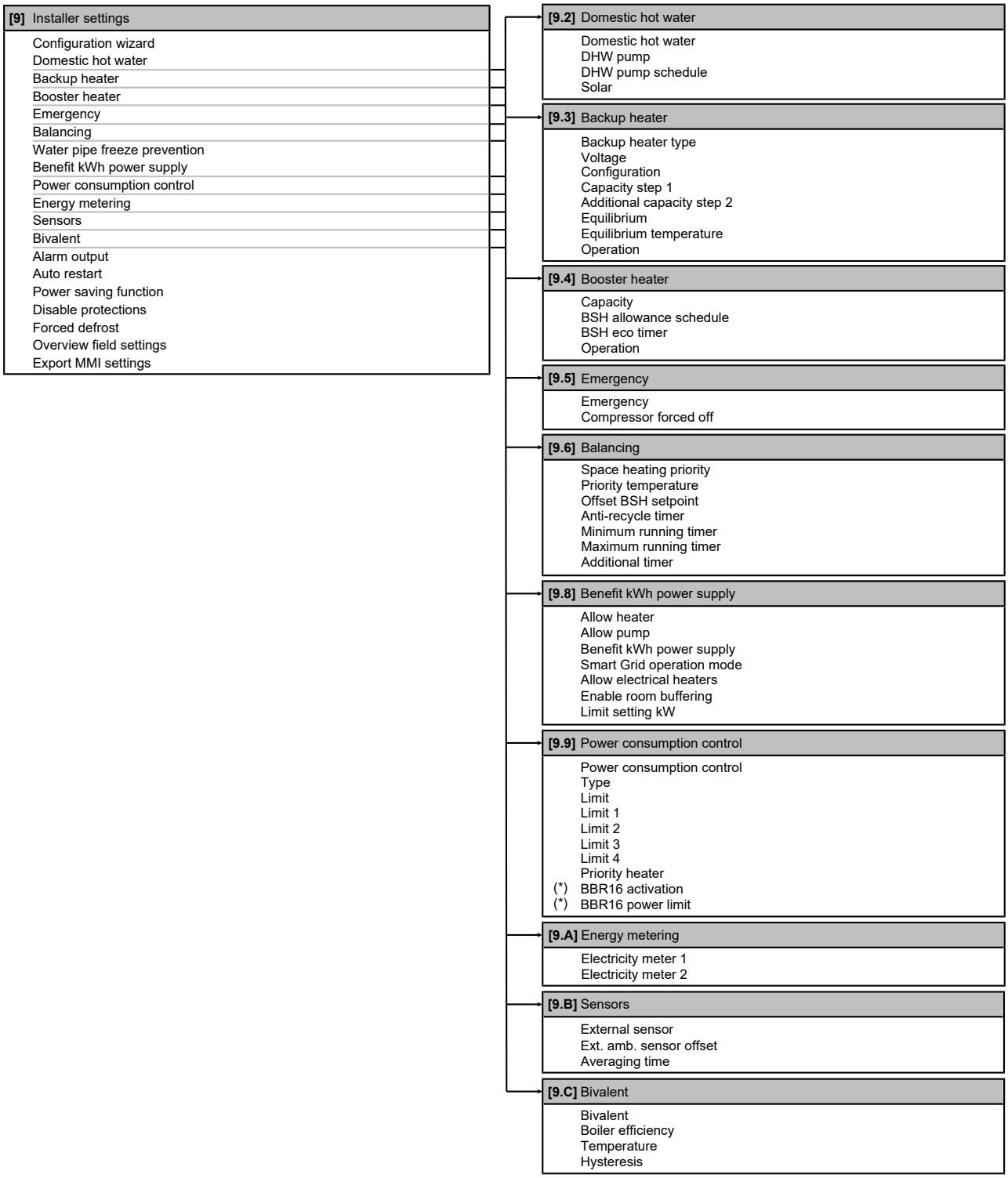

(*) Only applicable in Swedish language.

INFORMATION

Solar kit settings are shown but are NOT applicable for this unit. Settings shall NOT be used or changed.

INFORMATION

Depending on the selected installer settings and unit type, settings will be visible/ invisible.

11 Commissioning

NOTICE

General commissioning checklist. Next to the commissioning instructions in this chapter, a general commissioning checklist is also available on the Daikin Business Portal (authentication required).

The general commissioning checklist is complementary to the instructions in this chapter and can be used as a guideline and reporting template during commissioning and hand-over to the user.

NOTICE

The pump is equipped with an anti-blockage safety routine. This means that the pump operates for a short period of time every 24 hours during long periods of inactivity to ensure it does not get stuck. To enable this function, the unit must be connected to the power supply all year round.

NOTICE

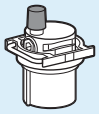



Make sure both air purge valves within the indoor unit (one on the magnetic filter and one on the backup heater) are open.

All automatic air purge valves MUST remain open after commissioning.

INFORMATION

Protective functions – "Installer-on-site mode". The software is equipped with protective functions, such as room antifrost. The unit automatically runs these functions when necessary.

During installation or service this behaviour is undesired. Therefore, the protective functions can be disabled:

- **At first power-on:** The protective functions are disabled by default. After 12 hours they will be automatically enabled.
- **Afterwards:** An installer can manually disable the protective functions by setting [9.G]: `Disable protections`=`Yes`. After his work is done, he can enable the protective functions by setting [9.G]: `Disable protections`=`No`.

Also see "Protective functions" [▸ 224].

In this chapter

11.1 Overview: Commissioning 232
11.2 Precautions when commissioning 233
11.3 Checklist before commissioning 233
11.4 Checklist during commissioning 234
11.4.1 Minimum flow rate 234
11.4.2 Air purge function 235
11.4.3 Actuator test run 236
11.4.4 Operation test run 237
11.4.5 Underfloor heating screed dryout 238

11.1 Overview: Commissioning

This chapter describes what you have to do and know to commission the system after it is installed and configured.

Typical workflow

Commissioning typically consists of the following stages:

1 Checking the "Checklist before commissioning".
2 Performing an air purge.
3 Performing a test run for the system.
4 If necessary, performing a test run for one or more actuators.
5 If necessary, performing an underfloor heating screed dryout.

11.2 Precautions when commissioning

NOTICE

ALWAYS operate the unit with thermistors and/or pressure sensors/switches. If NOT, burning of the compressor might be the result.

NOTICE

ALWAYS complete the refrigerant piping of the unit before operating. If NOT, the compressor will break.

INFORMATION

During the first running period of the unit, the required power may be higher than stated on the nameplate of the unit. This phenomenon is caused by the compressor, that needs a continuous run time of 50 hours before reaching smooth operation and stable power consumption.

11.3 Checklist before commissioning

1 After the installation of the unit, check the items listed below.
2 Close the unit.
3 Power up the unit.

☐	You read the complete installation instructions, as described in the **installer reference guide**.
☐	The **indoor unit** is properly mounted.
☐	The **outdoor unit** is properly mounted.
☐	The following **field wiring** has been carried out according to this document and the applicable legislation: ▪ Between the local supply panel and the outdoor unit ▪ Between indoor unit and outdoor unit ▪ Between the local supply panel and the indoor unit ▪ Between the indoor unit and the valves (if applicable) ▪ Between the indoor unit and the room thermostat (if applicable) ▪ Between the indoor unit and the domestic hot water tank (if applicable)
☐	The system is properly **earthed** and the earth terminals are tightened.
☐	The **fuses**, **circuit breakers**, or **locally installed protection devices** are of the size and type specified in this document, and have NOT been bypassed.
☐	The **power supply voltage** matches the voltage on the identification label of the unit.
☐	There are NO **loose connections** or damaged electrical components in the switch box.

☐	There are NO **damaged components** or **squeezed pipes** on the inside of the indoor and outdoor units.
☐	**Backup heater circuit breaker** F1B (field supply) is turned ON.
☐	Only for tanks with built-in booster heater: **Booster heater circuit breaker** F2B (field supply) is turned ON.
☐	There are NO **refrigerant leaks**.
☐	The **refrigerant pipes** (gas and liquid) are thermally insulated.
☐	The correct pipe size is installed and the **pipes** are properly insulated.
☐	There is NO **water leak** inside the indoor unit.
☐	The **shut-off valves** are properly installed and fully open.
☐	The **stop valves** (gas and liquid) on the outdoor unit are fully open.
☐	The **air purge** valve is open (at least 2 turns).
☐	The **pressure relief valve** (space heating circuit) purges water when opened. Clean water MUST come out.
☐	The **minimum water volume** is guaranteed in all conditions. See "To check the water volume and flow rate" in "8.5 Preparing water piping" [▶ 97].
☐	(if applicable) The **domestic hot water tank** is filled completely.

11.4 Checklist during commissioning

☐	To check that the **minimum flow rate** during backup heater/defrost operation is guaranteed in all conditions. See "To check the water volume and flow rate" in "8.5 Preparing water piping" [▶ 97].
☐	To perform an **air purge**.
☐	To perform an **actuator test run**.
☐	To perform a **test run**.
☐	To perform (start) an **underfloor screed dryout** (if necessary).

11.4.1 Minimum flow rate

Purpose

For a correct operating unit, it is important to check if the minimum flow rate is reached. If needed, modify the bypass valve setting.

Minimum required flow rate
12 l/min

To check the minimum flow rate

1	Check the hydraulic configuration to find out which space heating loops can be closed by mechanical, electronic, or other valves.	—
2	Close all space heating loops that can be closed.	—
3	Start the pump test run (see "11.4.3 Actuator test run" [▶ 236]).	—

4	Read out the flow rate[a] and modify the bypass valve setting to reach the minimum required flow rate + 2 l/min.	—

[a] During pump test run, the unit can operate below the minimum required flow rate.

To check the minimum flow rate: Domestic hot water circuit

1	Put the 3-way valve in domestic hot water position.	—
2	Start the pump test run (see "11.4.3 Actuator test run" [▶ 236]).	—
3	Read out the flow rate and modify the bypass valve setting to reach the minimum required flow rate + 2l/min.	—

11.4.2 Air purge function

Purpose

When commissioning and installing the unit, it is very important to remove all air in the water circuit. When the air purge function is running, the pump operates without actual operation of the unit and the removal of air in the water circuit will start.

NOTICE

Before starting the air purge, open the safety valve and check if the circuit is sufficiently filled with water. Only if water escapes the valve after opening it, you can start the air purge procedure.

Manual or automatic

There are two modes for purging air:

- Manual: You can set the pump speed to low or high. You can set the circuit (the position of the 3-way valve) to Space or Tank. Air purge must be performed for both space heating and tank (domestic hot water) circuits.
- Automatic: The unit automatically changes the pump speed and switches the position of the 3-way valve between the space heating and the domestic hot water circuit.

Typical workflow

Purging the air from the system should consist of:

1 Performing a manual air purge
2 Performing an automatic air purge

INFORMATION

Start by performing a manual air purge. When almost all the air is removed, perform an automatic air purge. If necessary, repeat performing the automatic air purge until you are sure that all air is removed from the system. During air purge function, pump speed limitation [9-0D] is NOT applicable.

The air purge function automatically stops after 30 minutes.

INFORMATION

For best results, air purge each loop separately.

To perform a manual air purge

Conditions: Make sure all operation is disabled. Go to [C]: `Operation` and turn off `Space heating/cooling` and `Tank` operation.

1	Set the user permission level to **Installer**. See "To change the user permission level" [▶ 136].	—
2	Go to [A.3]: **Commissioning** > **Air purge**.	
3	In the menu, set **Type** = **Manual**.	
4	Select **Start air purge**.	
5	Select **OK** to confirm. **Result:** The air purge starts. It stops automatically when ready.	
6	During manual operation: ▪ You can change the pump speed. ▪ You must change the circuit. To change these settings during the air purge, open the menu and go to [A.3.1.5]: **Settings**.	
	▪ Scroll to **Circuit** and set it to **Space**/**Tank**.	
	▪ Scroll to **Pump speed** and set it to **Low**/**High**.	
7	To stop the air purge manually:	—
	1 Open the menu and go to **Stop air purge**.	
	2 Select **OK** to confirm.	

To perform an automatic air purge

Conditions: Make sure all operation is disabled. Go to [C]: **Operation** and turn off **Space heating/cooling** and **Tank** operation.

1	Set the user permission level to **Installer**. See "To change the user permission level" [▶ 136].	—
2	Go to [A.3]: **Commissioning** > **Air purge**.	
3	In the menu, set **Type** = **Automatic**.	
4	Select **Start air purge**.	
5	Select **OK** to confirm. **Result:** The air purge starts. It stops automatically when done.	
6	To stop the air purge manually:	—
	1 In the menu, go to **Stop air purge**.	
	2 Select **OK** to confirm.	

11.4.3 Actuator test run

Purpose

Perform an actuator test run to confirm the operation of the different actuators. For example, when you select **Pump**, a test run of the pump will start.

To perform an actuator test run

Conditions: Make sure all operation is disabled. Go to [C]: **Operation** and turn off **Space heating/cooling** and **Tank** operation.

1	Set the user permission level to Installer. See "To change the user permission level" [▶ 136].	—
2	Go to [A.2]: `Commissioning` > `Actuator test run`.	
3	Select a test from the list. **Example:** `Pump`.	
4	Select `OK` to confirm. **Result:** The actuator test run starts. It stops automatically when ready (±30 min).	
	To stop the test run manually:	—
	1 In the menu, go to `Stop test run`.	
	2 Select `OK` to confirm.	

Possible actuator test runs

- `Booster heater` test
- `Backup heater 1` test
- `Backup heater 2` test
- `Pump` test

> **INFORMATION**
> Make sure that all air is purged before executing the test run. Also avoid disturbances in the water circuit during the test run.

- `Shut off valve` test
- `Diverter valve` test (3-way valve for switching between space heating and tank heating)
- `Bivalent signal` test
- `Alarm output` test
- `C/H signal` test
- `DHW pump` test

11.4.4 Operation test run

Purpose

Perform test runs on the unit and monitor the leaving water and tank temperatures to check if the unit is working correctly. The following test runs should be made:

- Heating
- Cooling (if applicable)
- Tank

To perform an operation test run

Conditions: Make sure all operation is disabled. Go to [C]: `Operation` and turn off `Space heating/cooling` and `Tank` operation.

1	Set the user permission level to `Installer`. See "To change the user permission level" [▶ 136].	—
2	Go to [A.1]: `Commissioning` > `Operation test run`.	
3	Select a test from the list. **Example:** `Heating`.	

4	Select OK to confirm. **Result:** The test run starts. It stops automatically when ready (±30 min).	
	To stop the test run manually:	—
	1 In the menu, go to `Stop test run`.	
	2 Select OK to confirm.	

INFORMATION

If the outdoor temperature is outside the range of operation, the unit may NOT operate or may NOT deliver the required capacity.

To monitor leaving water and tank temperatures

During test run, the correct operation of the unit can be checked by monitoring its leaving water temperature (heating/cooling mode) and tank temperature (domestic hot water mode).

To monitor the temperatures:

1	In the menu, go to `Sensors`.	
2	Select the temperature information.	

11.4.5 Underfloor heating screed dryout

About underfloor heating screed dryout

Purpose

The underfloor heating (UFH) screed dryout function is used for drying out the screed of an underfloor heating system during the construction of the building.

NOTICE

The installer is responsible for:

- contacting the screed manufacturer for the maximum allowed water temperature, to avoid cracking the screed,
- programming the underfloor heating screed dryout schedule according to the initial heating instructions of the screed manufacturer,
- checking the proper functioning of the setup on a regular basis,
- performing the correct program complying with the type of the used screed.

UFH screed dryout before or during installation of outdoor unit

The UFH screed dryout function can be executed without finishing the outdoor installation. In this case, the backup heater will perform the screed dryout and supply the leaving water without heat pump operation.

To program an underfloor heating screed dryout schedule

Duration and temperature

The installer can program up to 20 steps. For each step he needs to enter:

1. the duration in hours, up to 72 hours,
2. the desired leaving water temperature, up to 55°C.

Example:

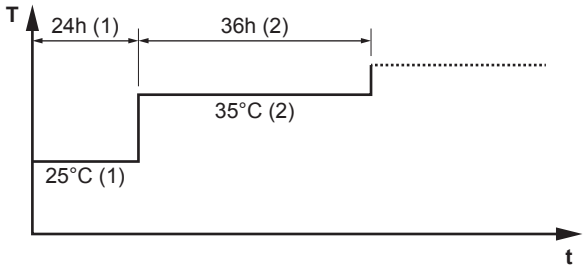

T Desired leaving water temperature (15~55°C)
t Duration (1~72 h)
(1) Action step 1
(2) Action step 2

Steps

1	Set the user permission level to `Installer`. See "To change the user permission level" [▶ 136].	—
2	Go to [A.4.2]: `Commissioning` > `UFH screed dryout` > `Program`.	
3	Program the schedule: To add a new step, select the next empty line and change its value. To delete a step and all steps below it, decrease the duration to "–".	—
	▪ Scroll through the schedule.	
	▪ Adjust the duration (between 1 and 72 hours) and temperatures (between 15°C and 55°C).	
4	Press the left dial to save the schedule.	

To perform an underfloor heating screed dryout

INFORMATION

- If `Emergency` is set to `Manual` ([9.5.1]=0), and the unit is triggered to start emergency operation, the user interface will ask confirmation before starting. The underfloor heating screed dryout function is active even if the user does NOT confirm emergency operation.
- During underfloor heating screed dryout, pump speed limitation [9-0D] is NOT applicable.

NOTICE

To perform an underfloor heating screed dryout, room frost protection needs to be disabled ([2-06]=0). By default, it is enabled ([2-06]=1). However, due to the "installer-on-site" mode (see "Commissioning"), room frost protection will be automatically disabled for 12 hours after the first power-on.

If the screed dryout still needs to be performed after the first 12 hours of power-on, manually disable room frost protection by setting [2-06] to "0", and KEEP it disabled until the screed dryout has finished. Ignoring this notice will result in cracking of the screed.

NOTICE

For the underfloor heating screed dryout to be able to start, make sure the following settings are met:

- [4-00]=1
- [C-02]=0
- [D-01]=0
- [4-08]=0
- [4-01]≠1

Steps

Conditions: An underfloor heating screed dryout schedule has been programmed. See "To program an underfloor heating screed dryout schedule" [▸ 238].

Conditions: Make sure all operation is disabled. Go to [C]: `Operation` and turn off `Space heating/cooling` and `Tank` operation.

1	Set the user permission level to `Installer`. See "To change the user permission level" [▸ 136].	—
2	Go to [A.4]: `Commissioning` > `UFH screed dryout`.	
3	Select `Start UFH screed dryout`.	
4	Select **OK** to confirm. **Result:** The underfloor heating screed dryout starts. It stops automatically when done.	
5	To stop the underfloor heating screed dryout manually:	—
	1 Open the menu and go to `Stop UFH screed dryout`.	
	2 Select **OK** to confirm.	

To read out the status of an underfloor heating screed dryout

Conditions: You are performing an underfloor heating screed dryout.

1	Press the back button. **Result:** A graph is displayed, highlighting the current step of the screed dryout schedule, the total remaining time, and the current desired leaving water temperature.	
2	Press the left dial to open the menu structure and to:	
	1 View the status of sensors and actuators.	—
	2 Adjust the current program	—

To stop an underfloor heating (UFH) screed dryout

U3-error

When the program is stopped by an error or an operation switch off, the U3 error will be displayed on the user interface. To resolve the error codes, see "14.4 Solving problems based on error codes" [▸ 255].

In case of a power failure, the U3 error is not generated. When power is restored, the unit automatically restarts the latest step and continues the program.

Stop UFH screed dryout

To manually stop underfloor heating screed dryout:

1	Go to [A.4.3]: `Commissioning` > `UFH screed dryout`	—
2	Select `Stop UFH screed dryout`.	
3	Select **OK** to confirm. **Result:** The underfloor heating screed dryout is stopped.	

Read out UFH screed dryout status

When the program is stopped due to an error, an operation switch-off, or a power failure, you can read out the underfloor heating screed dryout status:

1	Go to [A.4.3]: `Commissioning` > `UFH screed dryout` > `Status`	
2	You can read out the value here: `Stopped at` + the step where the underfloor screed dryout was stopped.	—
3	Modify and restart the execution of the program[(a)].	—

[(a)] If the UFH screed dryout program was stopped due to a power failure and the power resumes, the program will automatically restart the last implemented step.

12 Hand-over to the user

Once the test run is finished and the unit operates properly, make sure the following is clear for the user:

- Fill in the installer setting table (in the operation manual) with the actual settings.
- Make sure that the user has the printed documentation and ask him/her to keep it for future reference. Inform the user that he/she can find the complete documentation at the URL mentioned earlier in this manual.
- Explain to the user how to properly operate the system and what to do in case of problems.
- Show the user what to do for the maintenance of the unit.
- Explain about energy saving tips to the user as described in the operation manual.

13 Maintenance and service

NOTICE

General maintenance/inspection checklist. Next to the maintenance instructions in this chapter, a general maintenance/inspection checklist is also available on the Daikin Business Portal (authentication required).

The general maintenance/inspection checklist is complementary to the instructions in this chapter and can be used as a guideline and reporting template during maintenance.

NOTICE

Maintenance MUST be done by an authorised installer or service agent.

We recommend performing maintenance at least once a year. However, applicable legislation might require shorter maintenance intervals.

NOTICE

Applicable legislation on **fluorinated greenhouse gases** requires that the refrigerant charge of the unit is indicated both in weight and CO_2 equivalent.

Formula to calculate the quantity in CO_2 equivalent tonnes: GWP value of the refrigerant × total refrigerant charge [in kg] / 1000

In this chapter

13.1 Maintenance safety precautions 243
13.2 Yearly maintenance 243
13.2.1 Yearly maintenance outdoor unit: overview 243
13.2.2 Yearly maintenance outdoor unit: instructions 244
13.2.3 Yearly maintenance indoor unit: overview 244
13.2.4 Yearly maintenance indoor unit: instructions 244
13.3 About cleaning the water filter in case of trouble 246
13.3.1 To remove the water filter 246
13.3.2 To clean the water filter in case of trouble 247
13.3.3 To install the water filter 248

13.1 Maintenance safety precautions



DANGER: RISK OF ELECTROCUTION



DANGER: RISK OF BURNING/SCALDING

NOTICE: Risk of electrostatic discharge

Before performing any maintenance or service work, touch a metal part of the unit in order to eliminate static electricity and to protect the PCB.

13.2 Yearly maintenance

13.2.1 Yearly maintenance outdoor unit: overview

Check the following at least once a year:

- Heat exchanger

13.2.2 Yearly maintenance outdoor unit: instructions

Heat exchanger

The heat exchanger of the outdoor unit can get blocked up due to dust, dirt, leaves, etc. It is recommended to clean the heat exchanger yearly. A blocked heat exchanger can lead to too low pressure or too high pressure leading to worse performance.

13.2.3 Yearly maintenance indoor unit: overview

- Water pressure
- Magnetic filter/dirt separator
- Water pressure relief valve
- Pressure relief valve of the domestic hot water tank
- Switch box
- Booster heater of the domestic hot water tank

13.2.4 Yearly maintenance indoor unit: instructions

Water pressure

Keep water pressure above 1 bar. If it is lower, add water.

Magnetic filter/dirt separator

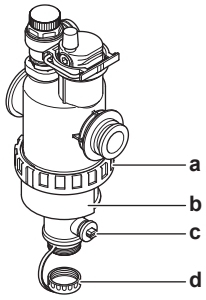

a Screw connection
b Magnetic sleeve
c Drain valve
d Drain cap

The yearly maintenance of the magnetic filter/dirt separator consists of:

- Checking if both parts of the magnetic filter/dirt separator are still screwed tight (a).
- Emptying the dirt separator as follows:

1 Take off the magnetic sleeve (b).

2 Unscrew the drain cap (d).

3 Connect a drain hose to the bottom of the water filter so that the water and dirt can be collected in a suitable container (bottle, sink...).

4 Open the drain valve for a couple of seconds (c).

Result: Water and dirt will come out.

5 Close the drain valve.

6 Screw the drain cap back on.

7 Reattach the magnetic sleeve.

8 Check the pressure of the water circuit. If required, add water.

NOTICE

- When checking the magnetic filter/dirt separator for tightness, hold it firmly, so as NOT to apply stress to the water piping.
- Do NOT isolate the magnetic filter/dirt separator by closing the shut-off valves. To properly empty the dirt separator, sufficient pressure is required.
- To prevent dirt from remaining in the dirt separator, ALWAYS take off the magnetic sleeve.
- ALWAYS first unscrew the drain cap, and connect a drain hose to the bottom of the water filter, then open the drain valve.

INFORMATION

For yearly maintenance, you do not have to remove the water filter from the unit to clean it. But in case of trouble with the water filter, you might have to remove it so that you can thoroughly clean it. Then you need to do as follows:

- "13.3.1 To remove the water filter" [▸ 246]
- "13.3.2 To clean the water filter in case of trouble" [▸ 247]
- "13.3.3 To install the water filter" [▸ 248]

Water pressure relief valve

Open the valve and check if it operates correctly. **The water may be very hot!**

Checkpoints are:

- The water flow coming from the relief valve is high enough, no blockage of the valve or in between piping is suspected.
- Dirty water coming out of the relief valve:
  - open the valve until the discharged water does NOT contain dirt anymore
  - flush the system

To make sure this water originates from the tank, check after a tank heat up cycle.

It is recommended to do this maintenance more frequently.

Pressure relief valve of the domestic hot water tank (field supply)

Open the valve.

CAUTION

Water coming out of the valve may be very hot.

- Check if nothing blocks the water in the valve or in between piping. The water flow coming from the relief valve must be high enough.
- Check if the water coming out of the relief valve is clean. If it contains debris or dirt:
  - Open the valve until the discharged water does not contain debris or dirt anymore.
  - Flush and clean the complete tank, including the piping between the relief valve and cold water inlet.

To make sure this water originates from the tank, check after a tank heat up cycle.

INFORMATION

It is recommended to perform this maintenance more than once a year.

Switch box

- Carry out a thorough visual inspection of the switch box and look for obvious defects such as loose connections or defective wiring.
- Using an ohmmeter, check if contactors K1M, K2M, K3M and K5M (depending on your installation) operate correctly. All contacts of these contactors must be in open position when the power is turned OFF.

WARNING

If the internal wiring is damaged, it has to be replaced by the manufacturer, its service agent or similarly qualified persons.

Booster heater of the domestic hot water tank

INFORMATION

Only for wall-mounted units equipped with a domestic hot water tank with a built-in electrical booster heater (EKHW).

It is recommended to remove lime buildup on the booster heater to extend its life span, especially in regions with hard water. To do so, drain the domestic hot water tank, remove the booster heater from the domestic hot water tank and immerse in a bucket (or similar) with lime-removing product for 24 hours.

13.3 About cleaning the water filter in case of trouble

INFORMATION

For yearly maintenance, you do not have to remove the water filter from the unit to clean it. But in case of trouble with the water filter, you might have to remove it so that you can thoroughly clean it. Then you need to do as follows:

- "13.3.1 To remove the water filter" [▸ 246]
- "13.3.2 To clean the water filter in case of trouble" [▸ 247]
- "13.3.3 To install the water filter" [▸ 248]

13.3.1 To remove the water filter

Prerequisite: Stop the unit operation via the user interface.

Prerequisite: Turn OFF the respective circuit breaker.

1. The water filter is located behind the switch box. To get access to it, see:

   "7.2.4 To open the indoor unit" [▸ 72]
2. Close the stop valves of the water circuit.
3. Remove the cap on the bottom of the magnetic filter/dirt separator.
4. Connect a drain hose to the bottom of the water filter.
5. Open the valve on the bottom of the water filter to drain water from the water circuit. Collect the drained water in a bottle, sink,... using the installed drain hose.
6. Remove the 2 clips that fix the water filter.

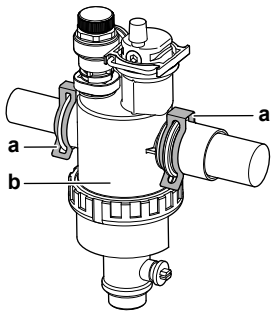

a Clip
b Magnetic filter/dirt separator

7 Remove the water filter.

8 Remove the drain hose from the water filter.

NOTICE
Although the water circuit is drained, some water may be spilled when removing the magnetic filter/dirt separator from the filter housing. ALWAYS clean up spilled water.

13.3.2 To clean the water filter in case of trouble

1 Remove the water filter from the unit. See "13.3.1 To remove the water filter" [▸ 246].

NOTICE
To protect the piping connected to the magnetic filter/dirt separator from damage it is recommended to perform this procedure with the magnetic filter/dirt separator removed from the unit.

2 Unscrew the bottom of the water filter housing. Use an appropriate tool if needed.

NOTICE
Opening the magnetic filter/dirt separator is ONLY required in case of severe issues. Preferably this action is never to be done during the complete lifetime of the magnetic filter/dirt separator.

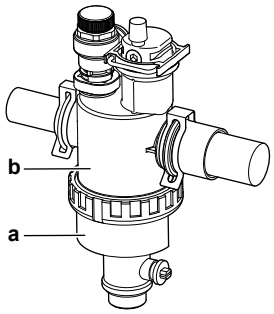

a Bottom part to be unscrewed
b Water filter housing

3 Remove the strainer and the rolled-up filter from the water filter housing and clean with water.

4 Install the cleaned rolled-up filter and strainer in the water filter housing.

INFORMATION
Correctly install the strainer in the magnetic filter/dirt separator housing using the protrusions.

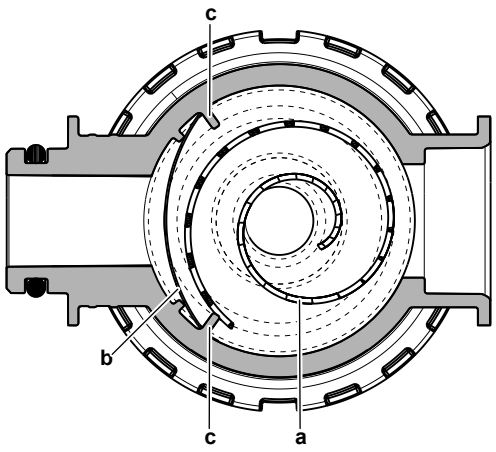

a Rolled-up filter
b Strainer
c Protrusion

5 Install and properly tighten the bottom of the water filter housing.

13.3.3 To install the water filter

NOTICE

Check the condition of the O-rings and replace if needed. Apply water or silicon grease to the O-rings before installation.

1 Install the water filter in the correct location.

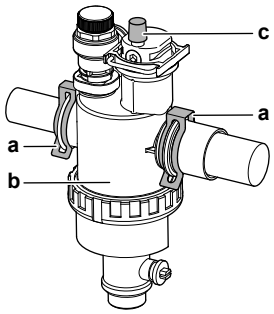

a Clip
b Magnetic filter/dirt separator
c Air purge valve

2 Install the 2 clips to fix the water filter to the water circuit pipes.

3 Make sure that the air purge valve of the water filter is in the open position.

4 Open the stop valves and add water to the water circuit if needed.

14 Troubleshooting

In this chapter

14.1 Overview: Troubleshooting 249
14.2 Precautions when troubleshooting 249
14.3 Solving problems based on symptoms 250
14.3.1 Symptom: The unit is NOT heating or cooling as expected 250
14.3.2 Symptom: Hot water does NOT reach the desired temperature 250
14.3.3 Symptom: The compressor does NOT start (space heating or domestic water heating) 251
14.3.4 Symptom: The system is making gurgling noises after commissioning 251
14.3.5 Symptom: The pump is making noise (cavitation) 252
14.3.6 Symptom: The pressure relief valve opens 252
14.3.7 Symptom: The water pressure relief valve leaks 253
14.3.8 Symptom: The space is NOT sufficiently heated at low outdoor temperatures 253
14.3.9 Symptom: The pressure at the tapping point is temporarily unusually high 254
14.3.10 Symptom: Tank disinfection function is NOT completed correctly (AH-error) 254
14.4 Solving problems based on error codes 255
14.4.1 To display the help text in case of a malfunction 255
14.4.2 Error codes: Overview 256

14.1 Overview: Troubleshooting

This chapter describes what you have to do in case of problems.

It contains information about:

- Solving problems based on symptoms
- Solving problems based on error codes

Before troubleshooting

Carry out a thorough visual inspection of the unit and look for obvious defects such as loose connections or defective wiring.

14.2 Precautions when troubleshooting



DANGER: RISK OF ELECTROCUTION



DANGER: RISK OF BURNING/SCALDING



WARNING

- When carrying out an inspection on the switch box of the unit, ALWAYS make sure that the unit is disconnected from the mains. Turn off the respective circuit breaker.
- When a safety device was activated, stop the unit and find out why the safety device was activated before resetting it. NEVER shunt safety devices or change their values to a value other than the factory default setting. If you are unable to find the cause of the problem, call your dealer.



WARNING

Prevent hazards due to inadvertent resetting of the thermal cut-out: power to this appliance MUST NOT be supplied through an external switching device, such as a timer, or connected to a circuit that is regularly turned ON and OFF by the utility.

14.3 Solving problems based on symptoms

14.3.1 Symptom: The unit is NOT heating or cooling as expected

Possible causes	Corrective action
The temperature setting is NOT correct	Check the temperature setting on the remote controller. Refer to the operation manual.
The water flow is too low	Check and make sure that: ▪ All shut-off valves of the water circuit are completely open. ▪ The water filter is clean. Clean if necessary. ▪ There is no air in the system. Purge air if necessary. You can purge air manually (see "To perform a manual air purge" [▶ 235]) or use the automatic air purge function (see "To perform an automatic air purge" [▶ 236]). ▪ The water pressure is >1 bar. ▪ The expansion vessel is NOT broken. ▪ The valve (if equipped) of the water circuit towards the expansion vessel is open. ▪ The resistance in the water circuit is NOT too high for the pump (see the ESP curve in the "Technical data" chapter). If the problem persists after you have conducted all of the above checks, contact your dealer. In some cases, it is normal that the unit decides to use a low water flow.
The water volume in the installation is too low	Make sure that the water volume in the installation is above the minimum required value (see "8.5.3 To check the water volume and flow rate" [▶ 100]).

14.3.2 Symptom: Hot water does NOT reach the desired temperature

Possible causes	Corrective action
One of the tank temperature sensors is broken.	See the service manual of the unit for the corresponding corrective action.

14.3.3 Symptom: The compressor does NOT start (space heating or domestic water heating)

Possible causes	Corrective action
The compressor cannot start if the water temperature is too low. The unit will use the backup heater to reach the minimum water temperature (15°C), after which the compressor can start.	If the backup heater doesn't start either, check and make sure that: ▪ The power supply to the backup heater is correctly wired. ▪ The backup heater thermal protector is NOT activated. ▪ The backup heater contactors are NOT broken. If the problem persists, contact your dealer.
The preferential kWh rate power supply settings and electrical connections do NOT match	This should match with the connections as explained in: ▪ "9.3.1 To connect the main power supply" [▸ 116] ▪ "9.1.4 About preferential kWh rate power supply" [▸ 109] ▪ "9.1.5 Overview of electrical connections except external actuators" [▸ 110]
The preferential kWh rate signal was sent by the electricity company	In the user interface of the unit, go to [8.5.B] `Information` > `Actuators` > `Forced off contact`. If `Forced off contact` is `On`, the unit is operating under the preferential kWh rate. Wait for the power to return (maximum 2 hours).
Domestic hot water (including disinfection) and space heating operation are scheduled to start at the same time.	Change the schedule to not start both operation modes at the same moment.

14.3.4 Symptom: The system is making gurgling noises after commissioning

Possible cause	Corrective action
There is air in the system.	Purge air from the system.[a]
Incorrect hydraulic balance.	To be performed by the installer: 1 Perform hydraulic balancing to assure that the flow is correctly distributed between the emitters. 2 If hydraulic balancing is not sufficient, change the pump limitation settings ([9-0D] and [9-0E] if applicable).

Possible cause	Corrective action
Various malfunctions.	Check if 🔔 or ⚠ is displayed on the home screen of the user interface. See "14.4.1 To display the help text in case of a malfunction" [▶ 255] for more information about the malfunction.

[a] We recommend to purge air with the air purge function of the unit (to be performed by the installer). If you purge air from the heat emitters or collectors, mind the following:



WARNING

Air purging heat emitters or collectors. Before you purge air from heat emitters or collectors, check if 🔔 or ⚠ is displayed on the home screen of the user interface.

- If not, you can purge air immediately.
- If yes, make sure that the room where you want to purge air is sufficiently ventilated. **Reason:** In case of a breakdown, refrigerant might leak into the water circuit, and subsequently into the room when you purge air from the heat emitters or collectors.

14.3.5 Symptom: The pump is making noise (cavitation)

Possible causes	Corrective action
There is air in the system	Purge air manually (see "To perform a manual air purge" [▶ 235]) or use the automatic air purge function (see "To perform an automatic air purge" [▶ 236]).
The water pressure at the pump inlet is too low	Check and make sure that: ▪ The water pressure is >1 bar. ▪ The water pressure sensor is not broken. ▪ The expansion vessel is NOT broken. ▪ The valve (if equipped) of the water circuit towards the expansion vessel is open. ▪ The pre-pressure setting of the expansion vessel is correct (see "8.5.4 Changing the pre-pressure of the expansion vessel" [▶ 102]).

14.3.6 Symptom: The pressure relief valve opens

Possible causes	Corrective action
The expansion vessel is broken	Replace the expansion vessel.
The valve (if equipped) of the water circuit towards the expansion vessel is closed.	Open the valve.

Possible causes	Corrective action
The water volume in the installation is too high	Make sure that the water volume in the installation is below the maximum allowed value (see "8.5.3 To check the water volume and flow rate" [▸ 100] and "8.5.4 Changing the pre-pressure of the expansion vessel" [▸ 102]).
The water circuit head is too high	The water circuit head is the difference in height between the indoor unit and the highest point of the water circuit. If the indoor unit is located at the highest point of the installation, the installation height is considered 0 m. The maximum water circuit head is 10 m. Check the installation requirements.

14.3.7 Symptom: The water pressure relief valve leaks

Possible causes	Corrective action
Dirt is blocking the water pressure relief valve outlet	Check whether the pressure relief valve works correctly by turning the red knob on the valve counterclockwise: ▪ If you do NOT hear a clacking sound, contact your dealer. ▪ If the water keeps running out of the unit, close both the water inlet and outlet shut-off valves first and then contact your dealer.

14.3.8 Symptom: The space is NOT sufficiently heated at low outdoor temperatures

Possible causes	Corrective action
The backup heater operation is not activated	Check the following: ▪ The backup heater operation mode is enabled. Go to: [9.3.8]: `Installer settings` > `Backup heater` > `Operation` [4-00] ▪ The backup heater overcurrent circuit breaker is on. If not, turn it back on. ▪ The thermal protector of the backup heater is NOT activated. If it has, check the following, and then press the reset button in the switch box: - The water pressure - Whether there is air in the system - The air purge operation

Possible causes	Corrective action
The backup heater equilibrium temperature has not been configured correctly	Increase the equilibrium temperature to activate the backup heater operation at a higher outdoor temperature. Go to: [9.3.7]: `Installer settings` > `Backup heater` > `Equilibrium temperature` [5-01]
There is air in the system.	Purge air manually or automatically. See the air purge function in the chapter "11 Commissioning" [▸ 232].
Too much heat pump capacity is used for heating domestic hot water (applies only to installations with a domestic hot water tank)	Check if the `Space heating priority` settings have been configured appropriately: ▪ Make sure that the `Space heating priority` has been enabled. Go to [9.6.1]: `Installer settings` > `Balancing` > `Space heating priority` [5-02] ▪ Increase the "space heating priority temperature" to activate backup heater operation at a higher outdoor temperature. Go to [9.6.3]: `Installer settings` > `Balancing` > `Offset BSH setpoint` [5-03]

14.3.9 Symptom: The pressure at the tapping point is temporarily unusually high

Possible causes	Corrective action
Failing or blocked pressure relief valve.	▪ Flush and clean the complete tank including the piping between pressure relief valve and the cold water inlet. ▪ Replace the pressure relief valve.

14.3.10 Symptom: Tank disinfection function is NOT completed correctly (AH-error)

Possible causes	Corrective action
The disinfection function was interrupted by domestic hot water tapping	Program the start-up of the disinfection function when the coming 4 hours NO domestic hot water tapping is expected.

Possible causes	Corrective action
Large domestic hot water tapping happened recently before the programmed start-up of the disinfection function	If in [5.6] `Tank` > `Heat up mode` the mode `Reheat only` or `Schedule + reheat` is selected, it is recommended to program the start-up of the disinfection function at least 4 hours later than the last expected large hot water tapping. This start-up can be set by installer settings (disinfection function). If in [5.6] `Tank` > `Heat up mode` the mode `Schedule only` is selected, it is recommended to program a `Eco` action 3 hours before the scheduled start-up of the disinfection function to preheat the tank.
The disinfection operation was stopped manually: [C.3] `Operation` > `Tank` was turned off during disinfection.	Do NOT stop tank operation during disinfection.

14.4 Solving problems based on error codes

If the unit runs into a problem, the user interface displays an error code. It is important to understand the problem and to take measures before resetting an error code. This should be done by a licensed installer or by your local dealer.

This chapter gives you an overview of most possible error codes and their descriptions as they appear on the user interface.

INFORMATION

See the service manual for:

- The complete list of error codes
- A more detailed troubleshooting guideline for each error

14.4.1 To display the help text in case of a malfunction

In case of a malfunction, the following will appear on the home screen depending on the severity:

- : Error
- : Malfunction

You can get a short and a long description of the malfunction as follows:

1	Press the left dial to open the main menu and go to `Malfunctioning`. **Result:** A short description of the error and the error code is displayed on the screen.	
2	Press **?** in the error screen. **Result:** A long description of the error is displayed on the screen.	**?**

14.4.2 Error codes: Overview

Error codes of the unit

Error code		Description
7H-01		Water flow problem
7H-04		Water flow problem during domestic hot water production
7H-05		Water flow problem during heating/sampling
7H-06		Water flow problem during cooling/defrost
80-01		Returning water temperature sensor problem
81-00		Leaving water temperature sensor problem
89-01		Heat exchanger freeze-up protection activated during defrost (error)
89-02		Heat exchanger freeze-up protection activated during heating / DHW operation. (warning)
89-03		Heat exchanger freeze-up protection activated during defrost (warning)
89-05		Heat exchanger freeze-up protection activated during cooling operation. (error)
89-06		Heat exchanger freeze-up protection activated during cooling operation. (warning)
8F-00		Abnormal increase outlet water temperature (DHW)
8H-00		Abnormal increase outlet water temperature
8H-01		Overheating/undercooling mixed water circuit
8H-02		Overheating mixed water circuit (thermostat)
8H-03		Overheating water circuit (thermostat)
A1-00		Zero cross detection problem
A5-00		OU: High pressure peak cut / freeze protection problem
AA-01		Backup heater overheated or BUH power cable not connected
AC-00		Booster heater overheated
AH-00		Tank disinfection function not completed correctly
AJ-03		Too long DHW heat-up time required
C0-00		Flow sensor malfunction
C4-00		Heat exchanger temperature sensor problem
C5-00		Heat exchanger thermistor abnormality
CJ-02		Room temperature sensor problem

Error code		Description
E1-00		OU: PCB defect
E2-00		Leakage current detection error
E3-00		OU: Actuation of high pressure switch (HPS)
E3-24		High pressure sensor abnormality
E4-00		Abnormal suction pressure
E5-00		OU: Overheat of inverter compressor motor
E6-00		OU: Compressor startup defect
E7-00		OU: Malfunction of outdoor unit fan motor
E8-00		OU: Power input overvoltage
E9-00		Malfunction of electronic expansion valve
EA-00		OU: Cool/heat switchover problem
EC-00		Abnormal increase tank temperature
EC-04		Tank preheating
F3-00		OU: Malfunction of discharge pipe temperature
F6-00		OU: Abnormal high pressure in cooling
FA-00		OU: Abnormal high pressure, actuation of HPS
H0-00		OU: Voltage/current sensor problem
H1-00		External temperature sensor problem
H3-00		OU: Malfunction of high pressure switch (HPS)
H5-00		Malfunction of compressor overload protection
H6-00		OU: Malfunction of position detection sensor
H8-00		OU: Malfunction of compressor input (CT) system
H9-00		OU: Malfunction of outdoor air thermistor
HC-00		Tank temperature sensor problem
HC-01		Second tank temperature sensor problem
HJ-10		Water pressure sensor abnormality
J3-00		OU: Malfunction of discharge pipe thermistor
J6-00		OU: Malfunction of heat exchanger thermistor
J6-07		OU: Malfunction of heat exchanger thermistor
JA-00		OU: Malfunction of high pressure sensor
L1-00		Malfunction of INV PCB
L3-00		OU: Electrical box temperature rise problem

Error code		Description
L4-00		OU: Malfunction of inverter radiating fin temperature rise
L5-00		OU: Inverter instantaneous overcurrent (DC)
L8-00		Malfunction triggered by a thermal protection in the inverter PCB
L9-00		Prevention of compressor lock
LC-00		Malfunction in communication system of outdoor unit
P1-00		Open-phase power supply imbalance
P3-00		Abnormal direct current
P4-00		OU: Malfunction of radiating fin temperature sensor
PJ-00		Capacity setting mismatch
U0-00		OU: Shortage of refrigerant
U1-00		Malfunction by reverse phase/open-phase
U2-00		OU: Defect of power supply voltage
U3-00		Underfloor heating screed dryout function not completed correctly
U4-00		Indoor/outdoor unit communication problem
U5-00		User interface communication problem
U7-00		OU: Transmission malfunction between main CPU-INV CPU
U8-01		Connection with LAN adapter lost
U8-02		Connection with room thermostat lost
U8-03		No connection with room thermostat
U8-04		Unknown USB device
U8-05		File malfunction
U8-07		P1P2 communication error
UA-00		Indoor unit, outdoor unit matching problem
UA-16		Extension/hydro communication problem
UA-17		Tank type problem
UA-21		Extension/hydro mismatch problem
UF-00		Reversed piping or bad communication wiring detection.

INFORMATION

In case of error code AH and no interruption of the disinfection function occurred due to domestic hot water tapping, following actions are recommended:

- When the `Reheat only` or `Schedule + reheat` mode is selected, it is recommended to program the start-up of the disinfection function at least 4 hours later than the last expected large hot water tapping. This start-up can be set by installer settings (disinfection function).
- When the `Schedule only` mode is selected, it is recommended to program an `Eco` action 3 hours before the scheduled start-up of the disinfection function to preheat the tank.

NOTICE

When the minimum water flow is lower than described in the table below, the unit will temporarily stop operation and the user interface will display error 7H-01. After some time, this error will reset automatically and the unit will resume operation.

Minimum required flow rate
12 l/min

INFORMATION

Error AJ-03 is reset automatically from the moment there is a normal tank heat-up.

INFORMATION

If the booster heater overheats and is disabled by the thermostatic safety, the unit will not give an error directly. Check if the booster heater is still in operation if you experience one or more of the following errors:

- Powerful operation takes a very long time to heat up and the error code AJ-03 is displayed.
- During anti-legionella operation (weekly), the error code AH-00 is displayed because the unit cannot reach the requested temperature required for tank disinfection.

INFORMATION

A malfunctioning booster heater will have an impact on energy metering and power consumption control.

INFORMATION

The user interface will display how to reset an error code.

15 Disposal

NOTICE

Do NOT try to dismantle the system yourself: dismantling of the system, treatment of the refrigerant, oil and other parts MUST comply with applicable legislation. Units MUST be treated at a specialised treatment facility for reuse, recycling and recovery.

In this chapter

15.1 Overview: Disposal 260
15.2 To pump down 260

15.1 Overview: Disposal

Typical workflow

Disposing of the system typically consists of the following stages:

1 Pumping down the system.
2 Bringing the system to a specialized treatment facility.

INFORMATION

For more details, see the service manual.

15.2 To pump down

Example: To protect the environment, pump down when relocating the unit or when disposing of the unit.

DANGER: RISK OF EXPLOSION

Pump down – Refrigerant leakage. If you want to pump down the system, and there is a leak in the refrigerant circuit:

- Do NOT use the unit's automatic pump down function, with which you can collect all refrigerant from the system into the outdoor unit. **Possible consequence:** Self-combustion and explosion of the compressor because of air going into the operating compressor.
- Use a separate recovery system so that the unit's compressor does NOT have to operate.

NOTICE

During pump down operation, stop the compressor before removing the refrigerant piping. If the compressor is still running and the stop valve is open during pump down, air will be sucked into the system. Compressor breakdown or damage to the system can result due to abnormal pressure in the refrigerant cycle.

NOTICE

Before pump down. Before using the unit's automatic pump down function, do the following settings:

- Set [C-07]=0 (or [2.9]: `Main zone` > `Control` = `Leaving water`)
- Set [E-08]=0 (or [9.F]: `Installer settings` > `Power saving function` = `No`)

Pump down operation will extract all refrigerant from the system into the outdoor unit.

1 Remove the valve lid from the liquid stop valve and the gas stop valve.

2 Install a manifold on the gas stop valve.

3 Start the pump down operation via the user interface integrated in the indoor unit:

1	Set the user permission level to **Installer**. See "To change the user permission level" [▸ 136].	—
2	Go to [A.5]: **Commissioning** > **Pump down** .	
3	Select **Pump down**.	
4	Select **OK** to confirm. **Result:** The pump down operation starts. It stops automatically when done.	
	To stop the pump down operation manually:	—
	1 In the menu, go to **Stop pump down**.	
	2 Select **OK** to confirm.	

4 After 5 to 10 minutes (after only 1 or 2 minutes in case of very low ambient temperatures (<−10°C)), close the liquid stop valve with a hexagonal wrench.

5 Check on the manifold if the vacuum is reached.

6 After 2-3 minutes, close the gas stop valve and stop the pump down operation.

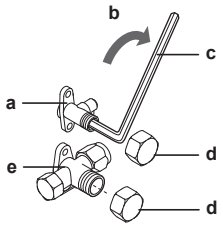

a Liquid stop valve
b Closing direction
c Hexagonal wrench
d Valve lid
e Gas stop valve

16 Technical data

A **subset** of the latest technical data is available on the regional Daikin website (publicly accessible). The **full set** of the latest technical data is available on the Daikin Business Portal (authentication required).

In this chapter

16.1 Piping diagram: Outdoor unit 263
16.2 Piping diagram: Indoor unit 264
16.3 Wiring diagram: Outdoor unit 265
16.4 Wiring diagram: Indoor unit 267
16.5 Table 1 – Maximum refrigerant charge allowed in a room: indoor unit 273
16.6 Table 2 – Minimum floor area: indoor unit 273
16.7 Table 3 – Minimum bottom opening area for natural ventilation: indoor unit 274
16.8 ESP curve: Indoor unit 275

16.1 Piping diagram: Outdoor unit

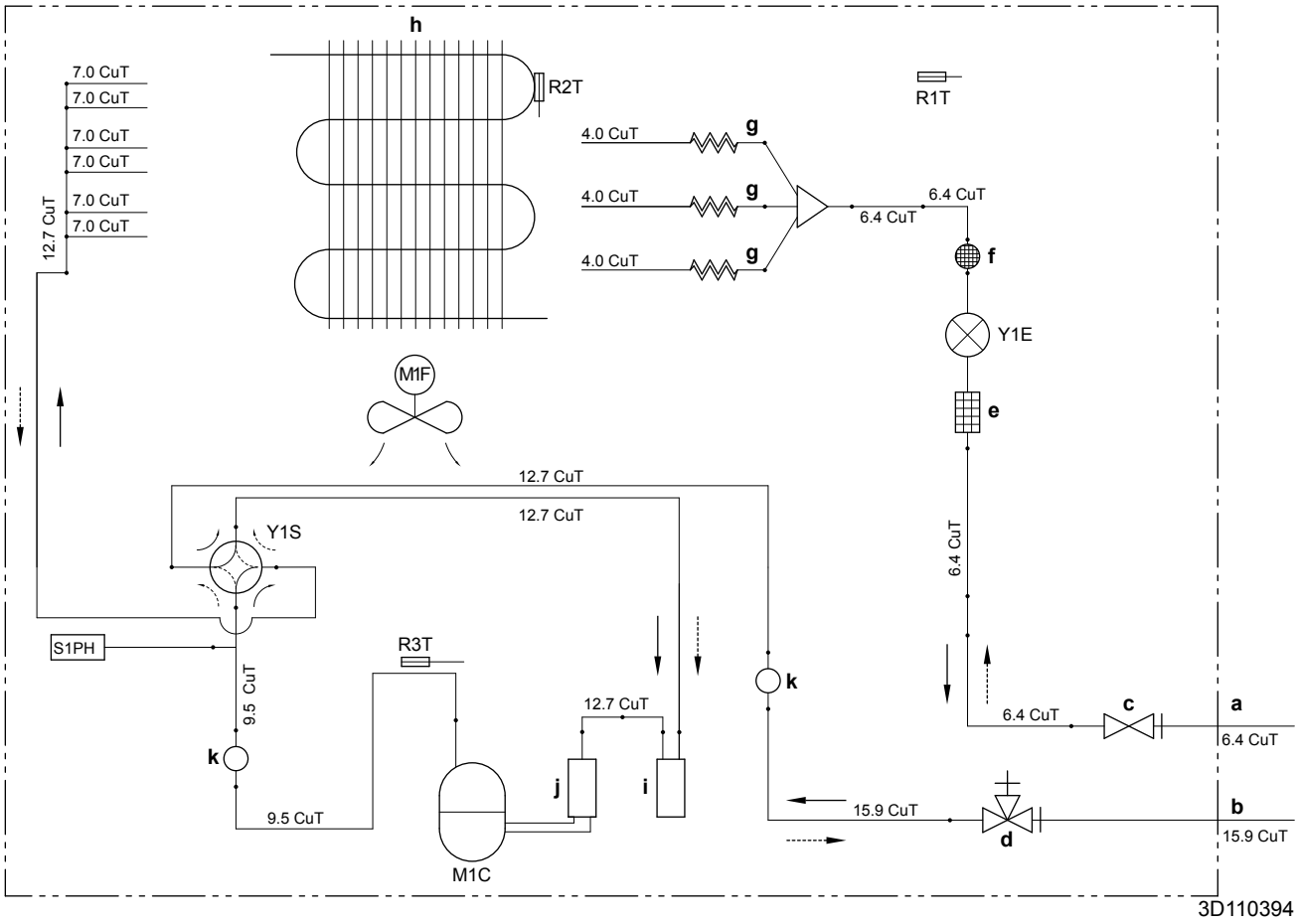

a Field piping (liquid: Ø6.4 mm flare connection)
b Field piping (gas: Ø15.9 mm flare connection)
c Stop valve (liquid)
d Stop valve with service port (gas)
e Filter
f Muffler with filter
g Capillary tube
h Heat exchanger
i Accumulator
j Compressor accumulator
k Muffler

M1C Compressor
M1F Fan
R1T Thermistor (outdoor air)
R2T Thermistor (heat exchanger)
R3T Thermistor (compressor discharge)
S1PH High pressure switch (automatic reset)
Y1E Electronic expansion valve
Y1S Solenoid valve (4-way valve)(ON: cooling)
--► Heating
—► Cooling

16.2 Piping diagram: Indoor unit

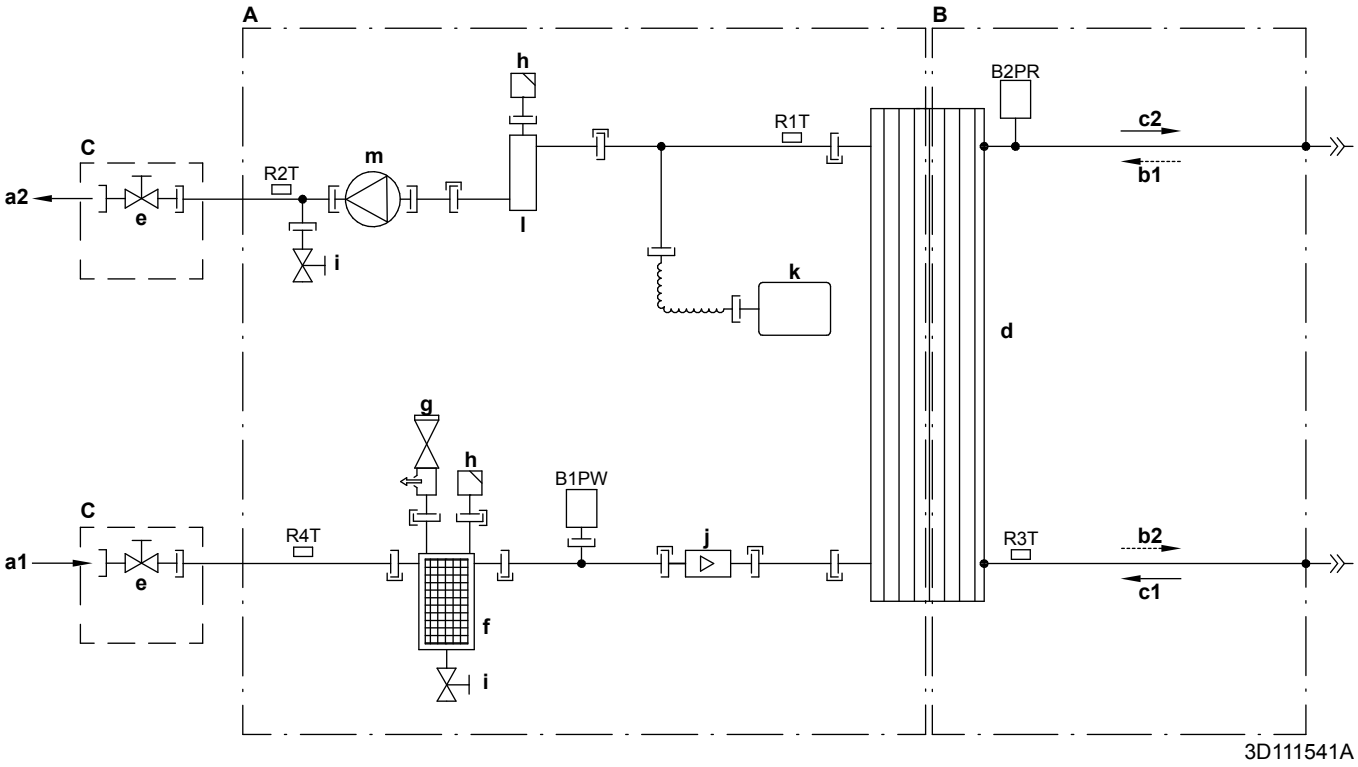

A	Water side
B	Refrigerant side
C	Field installed
a1	Space heating water IN
a2	Space heating water OUT
b1	Gas refrigerant IN (heating mode; condenser)
b2	Liquid refrigerant OUT (heating mode; condenser)
c1	Liquid refrigerant IN (cooling mode; evaporator)
c2	Gas refrigerant OUT (cooling mode; evaporator)
d	Plate heat exchanger
e	Shut-off valve for service
f	Magnetic filter/dirt separator
g	Safety valve
h	Air purge
i	Drain valve
j	Flow sensor
k	Expansion vessel
l	Backup heater
m	Pump

B1PW	Space heating water pressure sensor
B2PR	Refrigerant pressure sensor
R1T	Thermistor (heat exchanger – water OUT)
R2T	Thermistor (backup heater – water OUT)
R3T	Thermistor (liquid refrigerant)
R4T	Thermistor (heat exchanger – water IN)
	Screw connection
	Flare connection
	Quick coupling
	Brazed connection

16.3 Wiring diagram: Outdoor unit

See the internal wiring diagram supplied with the unit (on the inside of the top plate). The abbreviations used are listed below.

(1) Connection diagram

English	Translation
Connection diagram	Connection diagram

(2) Notes

English	Translation
Notes	Notes
	Connection
X1M	Main terminal
	Earth wiring
	Field supply
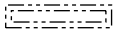	Option
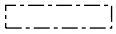	Switch box
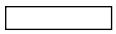	PCB
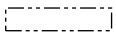	Wiring depending on model
	Protective earth
	Field wire

NOTES:

1 When operating, do not short-circuit protection device S1PH.

2 Refer to the combination table and the option manual for how to connect the wiring to X6A, X28A and X77A.

3 Colours: BLK: black; RED: red; BLU: blue; WHT: white; GRN: green; YLW: yellow

(3) Legend

AL*		Connector
C*		Capacitor
DB*		Rectifier bridge
DC*		Connector
DP*		Connector
E*		Connector
F1U		Fuse T 6.3 A 250 V
FU1, FU2		Fuse T 3.15 A 250 V
FU3		Fuse T 30 A 250 V
H*		Connector
IPM*		Intelligent power module

L		Connector
LED 1~5		Indication lamp
LED A		Pilot lamp
L*		Reactor
M1C		Compressor motor
M1F		Fan motor
MR*		Magnetic relay
N		Connector
PCB1		Printed circuit board (main)
PS		Switching power supply
Q1L		Thermal protector
Q1DI	#	Earth leakage circuit breaker
Q*		Insulated gate bipolar transistor (IGBT)
R1T		Thermistor (air)
R2T		Thermistor (heat exchanger)
R3T		Thermistor (discharge)
RTH2		Resistor
S		Connector
S1PH		High pressure switch
S2~80		Connector
SA1		Surge arrestor
SHM		Terminal strip fixed plate
U, V, W		Connector
V3, V4, V401		Varistor
X*A		Connector
X*M		Terminal strip
Y1E		Electronic expansion valve
Y1S		Solenoid valve (4-way valve)
Z*C		Noise filter (ferrite core)
Z*F		Noise filter

***** Optional
# Field supply

16.4 Wiring diagram: Indoor unit

See the internal wiring diagram supplied with the unit (on the inside of the indoor unit upper front panel). The abbreviations used are listed below.

Notes to go through before starting the unit

English	Translation
Notes to go through before starting the unit	Notes to go through before starting the unit
X1M	Main terminal
X2M	Field wiring terminal for AC
X5M	Field wiring terminal for DC
X6M	Backup heater power supply terminal
X7M, X8M	Booster heater power supply terminal
X10M	Smart Grid terminal
—·—·—·	Earth wiring
– – – – – – –	Field supply
①	Several wiring possibilities
	Option
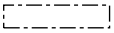	Not mounted in switch box
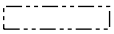	Wiring depending on model
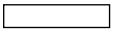	PCB
Note 1: Connection point of the power supply for the BUH/BSH should be foreseen outside the unit.	Note 1: Connection point of the power supply for the backup heater/booster heater should be foreseen outside the unit.
Backup heater power supply	Backup heater power supply
☐ 6T1 (3~, 230 V, 6 kW)	☐ 6T1 (3~, 230 V, 6 kW)
☐ 6V3 (1N~, 230 V, 6 kW)	☐ 6V3 (1N~, 230 V, 6 kW)
☐ 6WN/9WN (3N~, 400 V, 6/9 kW)	☐ 6WN/9WN (3N~, 400 V, 6/9 kW)
User installed options	User installed options
☐ Domestic hot water tank	☐ Domestic hot water tank
☐ Remote user interface	☐ Dedicated Human Comfort Interface (BRC1HHDA used as room thermostat)
☐ Ext. indoor thermistor	☐ External indoor thermistor
☐ Ext outdoor thermistor	☐ External outdoor thermistor
☐ Digital I/O PCB	☐ Digital I/O PCB
☐ Demand PCB	☐ Demand PCB
☐ Safety thermostat	☐ Safety thermostat
☐ Smart Grid	☐ Smart Grid
☐ WLAN module	☐ WLAN module

English	Translation
☐ WLAN cartridge	☐ WLAN cartridge
Main LWT	Main leaving water temperature
☐ On/OFF thermostat (wired)	☐ ON/OFF thermostat (wired)
☐ On/OFF thermostat (wireless)	☐ ON/OFF thermostat (wireless)
☐ Ext. thermistor	☐ External thermistor
☐ Heat pump convector	☐ Heat pump convector
Add LWT	Additional leaving water temperature
☐ On/OFF thermostat (wired)	☐ ON/OFF thermostat (wired)
☐ On/OFF thermostat (wireless)	☐ ON/OFF thermostat (wireless)
☐ Ext. thermistor	☐ External thermistor
☐ Heat pump convector	☐ Heat pump convector

Position in switch box

English	Translation
Position in switch box	Position in switch box

Legend

A1P		Main PCB
A2P	*	ON/OFF thermostat (PC=power circuit)
A3P	*	Heat pump convector
A4P	*	Digital I/O PCB
A8P	*	Demand PCB
A11P		Main PCB of the MMI (= user interface of the indoor unit)
A14P	*	PCB of the dedicated Human Comfort Interface (BRC1HHDA used as room thermostat)
A15P	*	Receiver PCB (wireless ON/OFF thermostat)
A20P	*	WLAN module
CN* (A4P)	*	Connector
DS1 (A8P)	*	DIP switch
F1B	#	Overcurrent fuse backup heater
F2B	#	Overcurrent fuse booster heater
F1U, F2U (A4P)	*	Fuse 5 A 250 V for digital I/O PCB
K1A, K2A	*	High voltage Smart Grid relay
K1M, K2M		Contactor backup heater
K3M	*	Contactor booster heater
K5M		Safety contactor backup heater
K6M		Relay 3-way valve bypass
K7M		Relay 3-way valve flow

K*R (A4P)		Relay on PCB
M2P	#	Domestic hot water pump
M2S	#	2-way valve for cooling mode
M3S	*	3-way valve for space heating/domestic hot water
PC (A15P)	*	Power circuit
PHC1 (A4P)	*	Optocoupler input circuit
Q1L		Thermal protector backup heater
Q4L	#	Safety thermostat
Q*DI	#	Earth leakage circuit breaker
R1H (A2P)	*	Humidity sensor
R1T (A2P)	*	Ambient sensor ON/OFF thermostat
R2T (A2P)	*	External sensor (floor or ambient)
R5T	*	Domestic hot water thermistor
R6T	*	External indoor or outdoor ambient thermistor
S1S	#	Preferential kWh rate power supply contact
S2S	#	Electrical meter pulse input 1
S3S	#	Electrical meter pulse input 2
S4S	#	Smart Grid feed-in
S6S~S9S	*	Digital power limitation inputs
S10S-S11S	#	Low voltage Smart Grid contact
SS1 (A4P)	*	Selector switch
TR1		Power supply transformer
X6M	#	Backup heater power supply terminal strip
X6M	*	Booster heater power supply connector
X7M, X8M	*	Booster heater power supply terminal strip
X10M	*	Smart Grid power supply terminal strip
X*, X*A, X*Y, Y*		Connector
X*M		Terminal strip

* Optional
\# Field supply

Translation of text on wiring diagram

English	Translation
(1) Main power connection	(1) Main power connection
For HP tariff	For preferential kWh rate power supply
Indoor unit supplied from outdoor	Indoor unit supplied from outdoor
Normal kWh rate power supply	Normal kWh rate power supply
Only for normal power supply (standard)	Only for normal power supply (standard)

English	Translation
Only for preferential kWh rate power supply (outdoor)	Only for preferential kWh rate power supply (outdoor)
Outdoor unit	Outdoor unit
Preferential kWh rate power supply contact: 16 V DC detection (voltage supplied by PCB)	Preferential kWh rate power supply contact: 16 V DC detection (voltage supplied by PCB)
SWB	Switch box
Use normal kWh rate power supply for indoor unit	Use normal kWh rate power supply for indoor unit
(2) Backup heater power supply	(2) Backup heater power supply
Only for ***	Only for ***
(3) User interface	(3) User interface
Only for remote user interface	Only for the dedicated Human Comfort Interface (BRC1HHDA used as room thermostat)
SD card	Card slot for WLAN cartridge
SWB	Switch box
WLAN cartridge	WLAN cartridge
(4) Domestic hot water tank	(4) Domestic hot water tank
3 wire type SPST	3 wire type SPST
Booster heater power supply	Booster heater power supply
Only for ***	Only for ***
SWB	Switch box
(5) Ext. thermistor	(5) External thermistor
SWB	Switch box
(6) Field supplied options	(6) Field supplied options
12 V DC pulse detection (voltage supplied by PCB)	12 V DC pulse detection (voltage supplied by PCB)
230 V AC Control Device	230 V AC Control Device
230 V AC supplied by PCB	230 V AC supplied by PCB
Continuous	Continuous current
DHW pump output	Domestic hot water pump output
DHW pump	Domestic hot water pump
Electrical meters	Electrical meters
For HV Smart Grid	For high voltage Smart Grid
For LV Smart Grid	For low voltage Smart Grid
For safety thermostat	For safety thermostat
For Smart Grid	For Smart Grid
Inrush	Inrush current

English	Translation
Max. load	Maximum load
Normally closed	Normally closed
Normally open	Normally open
Safety thermostat contact: 16 V DC detection (voltage supplied by PCB)	Safety thermostat contact: 16 V DC detection (voltage supplied by PCB)
Shut-off valve	Shut-off valve
Smart Grid contacts	Smart Grid contacts
Smart Grid PV power pulse meter	Smart Grid photovoltaic power pulse meter
SWB	Switch box
(7) Option PCBs	(7) Option PCBs
Alarm output	Alarm output
Changeover to ext. heat source	Changeover to external heat source
Max. load	Maximum load
Min. load	Minimum load
Only for demand PCB option	Only for demand PCB option
Only for digital I/O PCB option	Only for digital I/O PCB option
Options: ext. heat source output, solar pump connection, alarm output	Options: external heat source output, solar pump connection, alarm output
Options: On/OFF output	Options: ON/OFF output
Power limitation digital inputs: 12 V DC / 12 mA detection (voltage supplied by PCB)	Power limitation digital inputs: 12 V DC / 12 mA detection (voltage supplied by PCB)
Refer to operation manual	Refer to operation manual
Solar input	Solar input
Solar pump connection	Solar pump connection
Space C/H On/OFF output	Space cooling/heating ON/OFF output
SWB	Switch box
(8) External On/OFF thermostats and heat pump convector	(8) External ON/OFF thermostats and heat pump convector
Additional LWT zone	Additional leaving water temperature zone
Main LWT zone	Main leaving water temperature zone
Only for external sensor (floor/ambient)	Only for external sensor (floor or ambient)
Only for heat pump convector	Only for heat pump convector
Only for wired On/OFF thermostat	Only for wired ON/OFF thermostat
Only for wireless On/OFF thermostat	Only for wireless ON/OFF thermostat

Electrical connection diagram

For more details, please check the unit wiring.

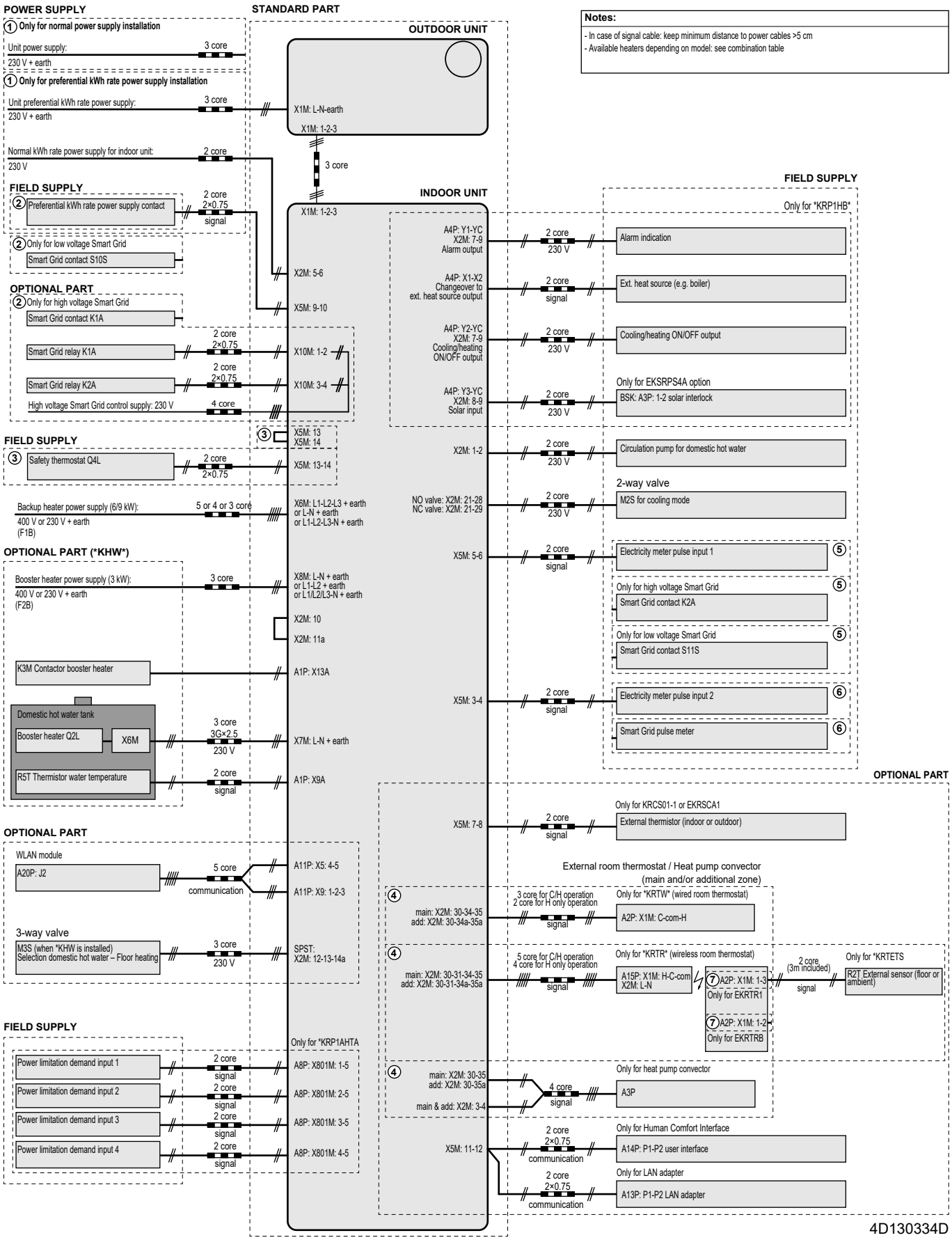

16.5 Table 1 – Maximum refrigerant charge allowed in a room: indoor unit

A_{room} (m^2)	Maximum refrigerant charge in a room (m_{max}) (kg)							
	H=1150 mm	H=1200 mm	H=1300 mm	H=1400 mm	H=1500 mm	H=1600 mm	H=1700 mm	H=1800 mm
1	0.25	0.26	0.29	0.31	0.33	0.36	0.38	0.40
2	0.51	0.53	0.58	0.62	0.67	0.71	0.76	0.81
3	0.76	0.79	0.86	0.93	1.00	1.07	1.14	1.21
4	1.01	1.06	1.15	1.24	1.34	1.43	1.52	1.61
5	1.27	1.32	1.44	1.55	1.67	1.78	1.90	2.01
6	1.52	1.59	1.73	1.87	2.00	2.14	2.28	2.42
7	1.66	1.74	1.89	2.04	2.19	2.34	2.49	2.65
8	1.78	1.86	2.02	2.18	2.34	2.50	2.67	2.83
9	1.89	1.97	2.14	2.31	2.49	2.66	2.83	3.00
10	1.99	2.08	2.26	2.44	2.62	2.80	2.98	3.16

INFORMATION

- H = Height measured from the bottom of the casing to the floor.
- For intermediate H values (i.e. when H is between two H values from the table), consider the value that corresponds to the lower H value from the table. If H=1450 mm, consider the value that corresponds to "H=1400 mm".
- For intermediate A_{room} values (i.e. when A_{room} is between two A_{room} values from the table), consider the value that corresponds to the lower A_{room} value from the table. If A_{room}=8.5 m^2, consider the value that corresponds to "A_{room}=8 m^2".

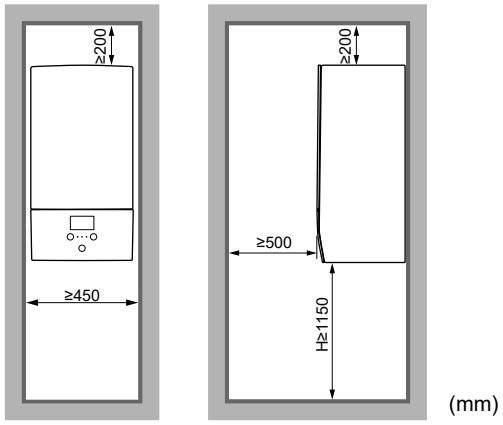

(mm)

16.6 Table 2 – Minimum floor area: indoor unit

m_c (kg)	Minimum floor area (m^2)							
	H=1150 mm	H=1200 mm	H=1300 mm	H=1400 mm	H=1500 mm	H=1600 mm	H=1700 mm	H=1800 mm
1.84	8.57	7.84	6.64	5.92	5.51	5.16	4.84	4.57
1.86	8.76	8.02	6.78	5.98	5.57	5.21	4.90	4.62
1.88	8.95	8.19	6.93	6.05	5.63	5.27	4.95	4.67
1.90	9.14	8.36	7.08	6.11	5.69	5.32	5.00	4.72

INFORMATION

- H = Height measured from the bottom of the casing to the floor.
- For intermediate H values (i.e. when H is between two H values from the table), consider the value that corresponds to the lower H value from the table. If H=1450 mm, consider the value that corresponds to "H=1400 mm".
- Systems with a total refrigerant charge (m_c) <1.84 kg (i.e. if the piping length is <27 m) are NOT subjected to any requirements to the installation room.
- Charges >1.9 kg are NOT allowed in the unit.

16.7 Table 3 – Minimum bottom opening area for natural ventilation: indoor unit

m_c	m_{max}	$dm=m_c-m_{max}$ (kg)	Minimum bottom opening area (cm^2)							
			H=1150 mm	H=1200 mm	H=1300 mm	H=1400 mm	H=1500 mm	H=1600 mm	H=1700 mm	H=1800 mm
1.9	0.1	1.80	538	515	495	477	461	446	433	421
1.9	0.3	1.60	479	458	440	424	410	397	385	374
1.9	0.5	1.40	419	401	385	371	359	347	337	327
1.9	0.7	1.20	359	344	330	318	308	298	289	281
1.9	0.9	1.00	299	287	275	265	256	248	241	234
1.9	1.1	0.80	240	229	220	212	205	199	193	187
1.9	1.3	0.60	180	172	165	159	154	149	145	141
1.9	1.5	0.40	120	115	110	106	103	100	97	94
1.9	1.7	0.20	63	58	55	53	52	50	49	47

INFORMATION

- H = Height measured from the bottom of the casing to the floor.
- For intermediate H values (i.e. when H is between two H values from the table), consider the value that corresponds to the lower H value from the table. If H=1450 mm, consider the floor area that corresponds to "H=1400 mm".
- For intermediate dm values (i.e. when dm is between two dm values from the table), consider the value that corresponds to the higher dm value from the table. If dm=1.55 kg, consider the value that corresponds to "dm=1.6 kg".

16.8 ESP curve: Indoor unit

Note: A flow error will occur when the minimum water flow rate is not reached.

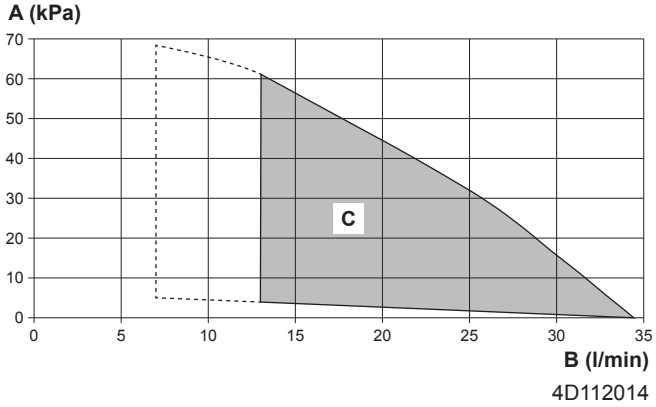

A External static pressure in the space heating/cooling circuit
B Water flow rate through the unit in the space heating/cooling circuit
C Operation range

Dashed lines: Operation area is extended to lower flow rates only in case the unit operates with heat pump only. (Not in startup, no backup heater operation, no defrost operation.)

Notes:

- Selecting a flow outside the operating area can damage the unit or cause the unit to malfunction. See also the minimum and maximum allowed water flow range in the technical specifications.
- Make sure water quality complies with EU directive 2020/2184.

17 Glossary

Dealer
Sales distributor for the product.

Authorised installer
Technical skilled person who is qualified to install the product.

User
Person who is owner of the product and/or operates the product.

Applicable legislation
All international, European, national and local directives, laws, regulations and/or codes that are relevant and applicable for a certain product or domain.

Service company
Qualified company which can perform or coordinate the required service to the product.

Installation manual
Instruction manual specified for a certain product or application, explaining how to install, configure and maintain it.

Operation manual
Instruction manual specified for a certain product or application, explaining how to operate it.

Maintenance instructions
Instruction manual specified for a certain product or application, which explains (if relevant) how to install, configure, operate and/or maintain the product or application.

Accessories
Labels, manuals, information sheets and equipment that are delivered with the product and that need to be installed according to the instructions in the accompanying documentation.

Optional equipment
Equipment made or approved by Daikin that can be combined with the product according to the instructions in the accompanying documentation.

Field supply
Equipment NOT made by Daikin that can be combined with the product according to the instructions in the accompanying documentation.

Field settings table

Applicable indoor units

EHBX04E▲6V▼
EHBX08E▲6V▼
EHBX08E▲9W▼
EHBH04E▲6V▼
EHBH08E▲6V▼
EHBH08E▲9W▼
EHVX04S18E▲3V▼
EHVX04S18E▲6V▼
EHVX04S23E▲3V▼
EHVX04S23E▲6V▼
EHVX08S18E▲6V▼
EHVX08S18E▲9W▼
EHVX08S23E▲6V▼
EHVX08S23E▲9W▼
EHVH04S18E▲6V▼
EHVH04S23E▲6V▼
EHVH08S18E▲6V▼
EHVH08S18E▲9W▼
EHVH08S23E▲6V▼
EHVH08S23E▲9W▼
EHVH04SU18E▲6V▼
EHVH04SU23E▲6V▼
EHVH08SU18E▲6V▼
EHVH08SU23E▲6V▼

Notes

(*1) *3V*
(*2) *6V*
(*3) *9W*
(*4) EHB*
(*5) EHV*
(*6) *X*
(*7) *H*

▲ = 1, 2, 3, …, 9, A, B, C, …, Z
▼ = , , 1, 2, 3, …, 9, A, B, C, …, Z

Field settings table					Installer setting at variance with default value	
Breadcrumb	Field code	Setting name		Range, step **Default value**	Date	Value
Room						
└ Antifrost						
1.4.1	[2-06]	Activation	R/W	0: Disabled **1: Enabled**		
1.4.2	[2-05]	Room setpoint	R/W	4~16°C, step: 1°C **12°C**		
└ Setpoint range						
1.5.1	[3-07]	Heating minimum	R/W	12~18°C, step: 1°C **12°C**		
1.5.2	[3-06]	Heating maximum	R/W	18~30°C, step: 1°C **30°C**		
1.5.3	[3-09]	Cooling minimum	R/W	15~25°C, step: 1°C **15°C**		
1.5.4	[3-08]	Cooling maximum	R/W	25~35°C, step: 1°C **35°C**		
Room						
1.6	[2-09]	Room sensor offset	R/W	-5~5°C, step: 0,5°C **0°C**		
1.7	[2-0A]	Room sensor offset	R/W	-5~5°C, step: 0,5°C **0°C**		
└ Room comfort setpoint						
1.9.1	[9-0A]	Heating comfort setpoint	R/W	[3-07]～[3-06]°C, step: 0,5°C **23°C**		
1.9.2	[9-0B]	Cooling comfort setpoint	R/W	[3-09]～[3-08]°C, step: 0,5°C **23°C**		
Main zone						
2.4		Setpoint mode		0: Fixed 1: WD heating, fixed cooling **2: Weather dependent**		
└ Heating WD curve						
2.5	[1-00]	Low ambient temp. for LWT main zone heating WD curve.	R/W	-40~5°C, step: 1°C **-10°C**		
2.5	[1-01]	High ambient temp. for LWT main zone heating WD curve.	R/W	10~25°C, step: 1°C **15°C**		
2.5	[1-02]	Leaving water value for low ambient temp. for LWT main zone heating WD curve.	R/W	[9-01]~[9-00], step: 1°C **35°C**		
2.5	[1-03]	Leaving water value for high ambient temp. for LWT main zone heating WD curve.	R/W	[9-01]~min(45, [9-00])°C , step: 1°C **25°C**		
└ Cooling WD curve						
2.6	[1-06]	Low ambient temp. for LWT main zone cooling WD curve.	R/W	10~25°C, step: 1°C **20°C**		
2.6	[1-07]	High ambient temp. for LWT main zone cooling WD curve.	R/W	25~43°C, step: 1°C **35°C**		
2.6	[1-08]	Leaving water value for low ambient temp. for LWT main zone cooling WD curve.	R/W	[9-03]~[9-02]°C, step: 1°C **22°C**		
2.6	[1-09]	Leaving water value for high ambient temp. for LWT main zone cooling WD curve.	R/W	[9-03]~[9-02]°C, step: 1°C **18°C**		
Main zone						
2.7	[2-0C]	Emitter type	R/W	**0: Underfloor heating** 1: Fancoil unit 2: Radiator		
└ Setpoint range						
2.8.1	[9-01]	Heating minimum	R/W	15~37°C, step: 1°C **25°C**		
2.8.2	[9-00]	Heating maximum	R/W	[2-0C]=2: 37~65, step: 1°C **55°C** [2-0C]≠2: 37~55, step: 1°C **55°C**		
2.8.3	[9-03]	Cooling minimum	R/W	5~18°C, step: 1°C **5°C**		
2.8.4	[9-02]	Cooling maximum	R/W	18~22°C, step: 1°C **22°C**		
Main zone						
2.9	[C-07]	Control	R/W	**0: LWT control** 1: Ext RT control 2: RT control		
2.A	[C-05]	Thermostat type	R/W	0: - 1: 1 contact **2: 2 contacts**		
└ Delta T						
2.B.1	[1-0B]	Delta T heating	R/W	3~10°C, step: 1°C **5°C**		
2.B.2	[1-0D]	Delta T cooling	R/W	3~10°C, step: 1°C **5°C**		
└ Modulation						
2.C.1	[8-05]	Modulation	R/W	**0: No** 1: Yes		
2.C.2	[8-06]	Max modulation	R/W	0~10°C, step: 1°C **5°C**		
└ Shut off valve						
2.D.1	[F-0B]	During thermo	R/W	**0: No** 1: Yes		
2.D.2	[F-0C]	During cooling	R/W	0: No **1: Yes**		
Additional zone						
3.4		Setpoint mode		0: Fixed 1: WD heating, fixed cooling **2: Weather dependent**		
└ Heating WD curve						
3.5	[0-00]	Leaving water value for high ambient temp. for LWT add zone heating WD curve.	R/W	[9-05]~min(45,[9-06])°C, step: 1°C **35°C**		
3.5	[0-01]	Leaving water value for low ambient temp. for LWT add zone heating WD curve.	R/W	[9-05]~[9-06]°C, step: 1°C **50°C**		

(*1) *3V*_(*2) *6V*_(*3) *9W*_
(*4) EHB*_(*5) EHV*_
(*6) *X*_(*7) *H*

Field settings table					Installer setting at variance with default value	
Breadcrumb	Field code	Setting name		Range, step **Default value**	Date	Value
3.5	[0-02]	High ambient temp. for LWT add zone heating WD curve.	R/W	10~25°C, step: 1°C **15°C**		
3.5	[0-03]	Low ambient temp. for LWT add zone heating WD curve.	R/W	-40~5°C, step: 1°C **-10°C**		
└ Cooling WD curve						
3.6	[0-04]	Leaving water value for high ambient temp. for LWT add zone cooling WD curve.	R/W	[9-07]~[9-08]°C, step: 1°C **8°C**		
3.6	[0-05]	Leaving water value for low ambient temp. for LWT add zone cooling WD curve.	R/W	[9-07]~[9-08]°C, step: 1°C **12°C**		
3.6	[0-06]	High ambient temp. for LWT add zone cooling WD curve.	R/W	25~43°C, step: 1°C **35°C**		
3.6	[0-07]	Low ambient temp. for LWT add zone cooling WD curve.	R/W	10~25°C, step: 1°C **20°C**		
Additional zone						
3.7	[2-0D]	Emitter type	R/W	**0: Underfloor heating** 1: Fancoil unit 2: Radiator		
└ Setpoint range						
3.8.1	[9-05]	Heating minimum	R/W	15~37°C, step: 1°C **25°C**		
3.8.2	[9-06]	Heating maximum	R/W	[2-0D]=2: 37~65, step: 1°C **55°C** [2-0D]≠2: 37~55, step: 1°C **55°C**		
3.8.3	[9-07]	Cooling minimum	R/W	5~18°C, step: 1°C **5°C**		
3.8.4	[9-08]	Cooling maximum	R/W	18~22°C, step: 1°C **22°C**		
Additional zone						
3.A	[C-06]	Thermostat type	R/W	0: - 1: 1 contact **2: 2 contacts**		
└ Delta T						
3.B.1	[1-0C]	Delta T heating	R/W	3~10°C, step: 1°C **5°C**		
3.B.2	[1-0E]	Delta T cooling	R/W	3~10°C, step: 1°C **5°C**		
Space heating / cooling └ Operation range						
4.3.1	[4-02]	Space heating OFF temp	R/W	14~35°C, step: 1°C 2**2°C**		
4.3.2	[F-01]	Space cooling OFF temp	R/W	10~35°C, step: 1°C **20°C**		
Space heating / cooling						
4.4	[7-02]	Number of zones	R/W	**0: 1 LWT zone** 1: 2 LWT zones		
4.5	[F-0D]	Pump operation mode	R/W	0: Continuous **1: Sample** 2: Request		
4.6	[E-02]	Unit type	R/W (*6) R/O (*7)	**0: Reversible (*6)** **1: Heating only (*7)**		
4.7	[9-0D]	Pump speed limitation	R/W	0~8, step:1 0: No limitation 1~4: 90~60% pump speed 5~8: 90~60% pump speed during sampling **6**		
Space heating / cooling						
4.9	[F-00]	Pump outside range	R/W	**0: Restricted** 1: Allowed		
4.A	[D-03]	Increase around 0°C	R/W	0: No **1: increase 2°C, span 4°C** 2: increase 4°C, span 4°C 3: increase 2°C, span 8°C 4: increase 4°C, span 8°C		
4.B	[9-04]	Overshoot	R/W	1~4°C, step: 1°C **1°C**		
4.C	[2-06]	Antifrost	R/W	0: Disabled **1: Enabled**		
Tank						
5.2	[6-0A]	Comfort setpoint	R/W	30~[6-0E]°C, step: 1°C **60°C**		
5.3	[6-0B]	Eco setpoint	R/W	30~min(50, [6-0E])°C, step: 1°C **45°C**		
5.4	[6-0C]	Reheat setpoint	R/W	30~min(50, [6-0E])°C, step: 1°C **45°C**		
5.6	[6-0D]	Heat up mode	R/W	0: Reheat only **1: Reheat + sched.** 2: Scheduled only		
└ Disinfection						
5.7.1	[2-01]	Activation	R/W	0: No **1: Yes**		
5.7.2	[2-00]	Operation day	R/W	0: Each day 1: Monday 2: Tuesday 3: Wednesday 4: Thursday **5: Friday** 6: Saturday 7: Sunday		
5.7.3	[2-02]	Start time	R/W	0~23 hour, step: 1 hour **1**		

(*1) *3V*_(*2) *6V*_(*3) *9W*_
(*4) EHB*_(*5) EHV*_
(*6) *X*_(*7) *H*

Field settings table					Installer setting at variance with default value	
Breadcrumb	Field code	Setting name		Range, step **Default value**	Date	Value
5.7.4	[2-03]	Tank setpoint	R/W	[E-07]≠1 : 55~75°C, step: 5°C **70°C** [E-07]=1 : 60°C **60°C**		
5.7.5	[2-04]	Duration	R/W	[E-07]≠1: 5~60 min, step: 5 min **10 min** [E-07]=1: 40~60 min, step: 5 min **40 min**		
Tank						
5.8	[6-0E]	Maximum	R/W	(*4) : 40~75°C, step: 1°C **60°C** [E-07]=0 (*4) : 40~80°C, step: 1°C **80°C** [E-07]=5 (*5) : 40~60°C, step: 1°C **60°C**		
5.9	[6-00]	Hysteresis	R/W	2~40°C, step: 1°C **25°C**		
5.A	[6-08]	Hysteresis	R/W	2~20°C, step: 1°C **10°C**		
5.B		Setpoint mode	R/W	**0: Fixed** 1: Weather dependent		
└ WD curve						
5.C	[0-0B]	Leaving water value for high ambient temp. for DHW WD curve.	R/W	35~[6-0E]°C, step: 1°C **55°C**		
5.C	[0-0C]	Leaving water value for low ambient temp. for DHW WD curve.	R/W	45~[6-0E]°C, step: 1°C 6**0°C**		
5.C	[0-0D]	High ambient temp. for DHW WD curve.	R/W	10~25°C, step: 1°C **15°C**		
5.C	[0-0E]	Low ambient temp. for DHW WD curve.	R/W	-40~5°C, step: 1°C **-10°C**		
Tank						
5.D	[6-01]	Margin	R/W	0~10°C, step: 1°C **2°C**		
User settings └ Quiet						
7.4.1		Activation	R/W	**0: OFF** 1: Quiet 2: More quiet 3: Most quiet 4: Automatic		
└ Electricity price						
7.5.1		High	R/W	0,00~990/kWh **1/kWh**		
7.5.2		Medium	R/W	0,00~990/kWh **1/kWh**		
7.5.3		Low	R/W	0,00~990/kWh **1/kWh**		
User settings						
7.6		Gas price	R/W	0,00~990/kWh 0,00~290/MBtu **1,0/kWh**		
Installer settings └ Configuration wizard └ System						
9.1	[E-03]	BUH type	R/O	**2: 3V (*1)** **3: 6V (*2)** **4: 9W (*3)**		
9.1	[E-05] [E-06] [E-07]	Domestic hot water	R/W	**No DHW (*4)** EKHW (*4) **Integrated (*5)** EKHWP (*4)		
9.1	[4-06]	Emergency	R/W	**0: Manual** 1: Automatic(normal SH/DHW ON) 2: Auto red SH/DHW ON 3: Auto red SH/DHW OFF 4: SH ON/DHW OFF		
9.1	[7-02]	Number of zones	R/W	**0: Single zone** 1: Dual zone		
└ Backup heater						
9.1	[5-0D]	Voltage	R/W (*2) R/O (*1) (*3)	**0: 230V, 1~ (*1) (*2)** 1: 230V, 3~ (*2) **2: 400V, 3~ (*3)**		
9.1	[4-0A]	Configuration	R/W	**0: 1 (*1)** **1: 1/1+2 (*2) (*3)** 2: 1/2 3: 1/2 + 1/1+2 in emergency		
9.1	[6-03]	Capacity step 1	R/W	0~10kW, step: 0,2kW 2**kW (*2)** **3kW (*1)(*3)**		
9.1	[6-04]	Additional capacity step 2	R/O (*1) R/W (*2) (*3)	0~10kW, step: 0,2kW **0kW (*1)** **4kW (*2)** **6kW (*3)**		
└ Main zone						
9.1	[2-0C]	Emitter type	R/W	**0: Underfloor heating** 1: Fancoil unit 2: Radiator		
9.1	[C-07]	Control	R/W	**0: LWT control** 1: Ext RT control 2: RT control		
9.1		Setpoint mode	R/W	0: Fixed 1: WD heating, fixed cooling **2: Weather dependent**		
9.1		Schedule	R/W	**0: No** 1: Yes		

(*1) *3V*_(*2) *6V*_(*3) *9W*_
(*4) EHB*_(*5) EHV*_
(*6) *X*_(*7) *H*

Field settings table					Installer setting at variance with default value	
Breadcrumb	Field code	Setting name		Range, step **Default value**	Date	Value
9.1	[1-00]	Low ambient temp. for LWT main zone heating WD curve.	R/W	-40~5°C, step: 1°C **-10°C**		
9.1	[1-01]	High ambient temp. for LWT main zone heating WD curve.	R/W	10~25°C, step: 1°C **15°C**		
9.1	[1-02]	Leaving water value for low ambient temp. for LWT main zone heating WD curve.	R/W	[9-01]~[9-00], step: 1°C **35°C**		
9.1	[1-03]	Leaving water value for high ambient temp. for LWT main zone heating WD curve.	R/W	[9-01]~min(45, [9-00])°C , step: 1°C **25°C**		
9.1	[1-06]	Low ambient temp. for LWT main zone cooling WD curve.	R/W	10~25°C, step: 1°C **20°C**		
9.1	[1-07]	High ambient temp. for LWT main zone cooling WD curve.	R/W	25~43°C, step: 1°C **35°C**		
9.1	[1-08]	Leaving water value for low ambient temp. for LWT main zone cooling WD curve.	R/W	[9-03]~[9-02]°C, step: 1°C **22°C**		
9.1	[1-09]	Leaving water value for high ambient temp. for LWT main zone cooling WD curve.	R/W	[9-03]~[9-02]°C, step: 1°C **18°C**		
		└ Additional zone				
9.1	[2-0D]	Emitter type	R/W	**0: Underfloor heating** 1: Fancoil unit 2: Radiator		
9.1		Setpoint mode	R/W	0: Fixed 1: WD heating, fixed cooling **2: Weather dependent**		
9.1		Schedule	R/W	**0: No** 1: Yes		
9.1	[0-00]	Leaving water value for high ambient temp. for LWT add zone heating WD curve.	R/W	[9-05]~min(45,[9-06])°C, step: 1°C **35°C**		
9.1	[0-01]	Leaving water value for low ambient temp. for LWT add zone heating WD curve.	R/W	[9-05]~[9-06]°C, step: 1°C **50°C**		
9.1	[0-02]	High ambient temp. for LWT add zone heating WD curve.	R/W	10~25°C, step: 1°C **15°C**		
9.1	[0-03]	Low ambient temp. for LWT add zone heating WD curve.	R/W	-40~5°C, step: 1°C **-10°C**		
9.1	[0-04]	Leaving water value for high ambient temp. for LWT add zone cooling WD curve.	R/W	[9-07]~[9-08]°C, step: 1°C **8°C**		
9.1	[0-05]	Leaving water value for low ambient temp. for LWT add zone cooling WD curve.	R/W	[9-07]~[9-08]°C, step: 1°C **12°C**		
9.1	[0-06]	High ambient temp. for LWT add zone cooling WD curve.	R/W	25~43°C, step: 1°C **35°C**		
9.1	[0-07]	Low ambient temp. for LWT add zone cooling WD curve.	R/W	10~25°C, step: 1°C **20°C**		
		└ Tank				
9.1	[6-0D]	Heat up mode	R/W	0: Reheat only **1: Reheat + sched.** 2: Scheduled only		
9.1	[6-0A]	Comfort setpoint	R/W	30~[6-0E]°C, step: 1°C **60°C**		
9.1	[6-0B]	Eco setpoint	R/W	30~min(50, [6-0E])°C, step: 1°C **45°C**		
9.1	[6-0C]	Reheat setpoint	R/W	30~min(50, [6-0E])°C, step: 1°C **45°C**		
	└ Domestic hot water					
9.2.1	[E-05] [E-06] [E-07]	Domestic hot water	R/W	**No DHW (*4)** EKHW (*4) **Integrated (*5)** EKHWP (*4)		
9.2.2	[D-02]	DHW pump	R/W	0: No 1: Secondary rtrn 2: Disinf. Shunt		
9.2.4	[D-07]	Solar	R/W	**0: No** 1: Yes		
	└ Back up heater					
9.3.1	[E-03]	BUH type	R/O	**2: 3V (*1)** **3: 6V (*2)** **4: 9W (*3)**		
9.3.2	[5-0D]	Voltage	R/W (*2) R/O (*1) (*3)	**0: 230V, 1~ (*1) (*2)** 1: 230V, 3~ (*2) **2: 400V, 3~ (*3)**		
9.3.3	[4-0A]	Configuration	R/W	**0: 1 (*1)** **1: 1/1+2 (*2) (*3)** 2: 1/2 3: 1/2 + 1/1+2 in emergency		
9.3.4	[6-03]	Capacity step 1	R/W	0~10kW, step: 0,2kW 2**kW (*2)** **3kW (*1)(*3)**		
9.3.5	[6-04]	Additional capacity step 2	R/O (*1) R/W (*2) (*3)	0~10kW, step: 0,2kW **0kW (*1)** **4kW (*2)** **6kW (*3)**		
9.3.6	[5-00]	Equilibrium: Deactivate backup heater (or external backup heat source in case of a bivalent system) above the equilibrium temperature for space heating?	R/W	0: No **1: Yes**		
9.3.7	[5-01]	Equilibrium temperature	R/W	-15~35°C, step: 1°C **0°C**		
9.3.8	[4-00]	Operation	R/W	0: Disabled **1: Enabled** 2: Only DHW		
	└ Booster heater					
9.4.1	[6-02]	Capacity	R/W	0~10kW, step: 0,2kW **3kW (*4)** **0kW (*5)**		
9.4.3	[8-03]	BSH eco timer	R/W	20~95 min, step: 5 min **50 min**		

(*1) *3V*_(*2) *6V*_(*3) *9W*_
(*4) EHB*_(*5) EHV*_
(*6) *X*_(*7) *H*

Field settings table					Installer setting at variance with default value	
Breadcrumb	Field code	Setting name		Range, step **Default value**	Date	Value
9.4.4	[4-03]	Operation	R/W	0: Restricted 1: Allowed 2: Overlap **3: Compressor off** 4: Legionella only		
└ Emergency						
9.5.1	[4-06]	Emergency	R/W	**0: Manual** 1: Automatic(normal SH/DHW ON) 2: Auto red SH/DHW ON 3: Auto red SH/DHW OFF 4: SH ON/DHW OFF		
9.5.2	[7-06]	Compressor forced off	R/W	**0: Disabled** 1: Enabled		
└ Balancing						
9.6.1	[5-02]	Space heating priority	R/W	**0: Disabled** 1: Enabled		
9.6.2	[5-03]	Priority temperature	R/W	-15~35°C, step: 1°C **0°C**		
9.6.3	[5-04]	Offset BSH setpoint	R/W	0~20°C, step: 1°C **10°C**		
9.6.4	[8-02]	Anti-recycle timer	R/W	0~10 hour, step: 0,5 hour **0,5 hour [E-07]=1** **3 hour [E-07]≠1**		
9.6.5	[8-00]	Minimum running timer	R/W	0~20 min, step 1 min **1 min**		
9.6.6	[8-01]	Maximum running timer	R/W	5~95 min, step: 5 min **30 min**		
9.6.7	[8-04]	Additional timer	R/W	0~95 min, step: 5 min **95 min**		
Installer settings						
9.7	[4-04]	Water pipe freeze prevention		0: Continuous pump operation 1: Non continuous pump operation **2: Off**		
└ Benefit kWh power supply						
9.8.2	[D-00]	Allow heater	R/W	**0: None** 1: BSH only 2: BUH only 3: All heaters		
9.8.3	[D-05]	Allow pump	R/W	0: Forced off **1: As normal**		
9.8.4	[D-01]	Benefit kWh power supply	R/W	**0: No** 1: Active open 2: Active closed 3: Smart grid		
9.8.6		Allow electric heaters		0: No **1: Yes**		
9.8.8		Limit setting kW		0~20 kW, step: 0,5 kW **20 kW**		
└ Power consumption control						
9.9.1	[4-08]	Power consumption control	R/W	**0: No limitation** 1: Continuous 2: Digital inputs		
9.9.2	[4-09]	Type	R/W	0: Current **1: Power**		
9.9.3	[5-05]	Limit	R/W	0~50 A, step: 1 A **50 A**		
9.9.4	[5-05]	Limit 1	R/W	0~50 A, step: 1 A **50 A**		
9.9.5	[5-06]	Limit 2	R/W	0~50 A, step: 1 A **50 A**		
9.9.6	[5-07]	Limit 3	R/W	0~50 A, step: 1 A **50 A**		
9.9.7	[5-08]	Limit 4	R/W	0~50 A, step: 1 A **50 A**		
9.9.8	[5-09]	Limit	R/W	0~20 kW, step: 0,5 kW **20 kW**		
9.9.9	[5-09]	Limit 1	R/W	0~20 kW, step: 0,5 kW **20 kW**		
9.9.A	[5-0A]	Limit 2	R/W	0~20 kW, step: 0,5 kW **20 kW**		
9.9.B	[5-0B]	Limit 3	R/W	0~20 kW, step: 0,5 kW **20 kW**		
9.9.C	[5-0C]	Limit 4	R/W	0~20 kW, step: 0,5 kW **20 kW**		
9.9.D	[4-01]	Priority heater		**0: None** 1: BSH 2: BUH		
└ Energy metering						
9.A.1	[D-08]	Electricity meter 1	R/W	**0: No** 1: 0,1 pulse/kWh 2: 1 pulse/kWh 3: 10 pulse/kWh 4: 100 pulse/kWh 5: 1000 pulse/kWh		
9.A.2	[D-09]	Electricity meter 2	R/W	**0: No** 1: 0,1 pulse/kWh 2: 1 pulse/kWh 3: 10 pulse/kWh 4: 100 pulse/kWh 5: 1000 pulse/kWh		
└ Sensors						
9.B.1	[C-08]	External sensor	R/W	**0: No** 1: Outdoor sensor 2: Room sensor		
9.B.2	[2-0B]	Ext. amb. sensor offset	R/W	-5~5°C, step: 0,5°C **0°C**		

(*1) *3V*_(*2) *6V*_(*3) *9W*_
(*4) EHB*_(*5) EHV*_
(*6) *X*_(*7) *H*

Field settings table					Installer setting at variance with default value	
Breadcrumb	Field code	Setting name		Range, step **Default value**	Date	Value
9.B.3	[1-0A]	Averaging time	R/W	**0: No averaging** 1: 12 hours 2: 24 hours 3: 48 hours 4: 72 hours		
└ Bivalent						
9.C.1	[C-02]	Bivalent	R/W	**0: No** 1: Bivalent		
9.C.2	[7-05]	Boiler efficiency	R/W	**0: Very high** 1: High 2: Medium 3: Low 4: Very low		
9.C.3	[C-03]	Temperature	R/W	-25~25°C, step: 1°C **0°C**		
9.C.4	[C-04]	Hysteresis	R/W	2~10°C, step 1°C **3°C**		
Installer settings						
9.D	[C-09]	Alarm output	R/W	**0: Normally open** 1: Normally closed		
9.E	[3-00]	Auto restart	R/W	0: No **1: Yes**		
9.F	[E-08]	Power saving function	R/W	0: Disabled **1: Enabled**		
9.G		Disable protections	R/W	0: No **1: Yes**		
└ Overview field settings						
9.I	[0-00]	Leaving water value for high ambient temp. for LWT add zone heating WD curve.	R/W	[9-05]~min(45,[9-06])°C, step: 1°C **35°C**		
9.I	[0-01]	Leaving water value for low ambient temp. for LWT add zone heating WD curve.	R/W	[9-05]~[9-06]°C, step: 1°C **50°C**		
9.I	[0-02]	High ambient temp. for LWT add zone heating WD curve.	R/W	10~25°C, step: 1°C **15°C**		
9.I	[0-03]	Low ambient temp. for LWT add zone heating WD curve.	R/W	-40~5°C, step: 1°C **-10°C**		
9.I	[0-04]	Leaving water value for high ambient temp. for LWT add zone cooling WD curve.	R/W	[9-07]~[9-08]°C, step: 1°C **8°C**		
9.I	[0-05]	Leaving water value for low ambient temp. for LWT add zone cooling WD curve.	R/W	[9-07]~[9-08]°C, step: 1°C **12°C**		
9.I	[0-06]	High ambient temp. for LWT add zone cooling WD curve.	R/W	25~43°C, step: 1°C **35°C**		
9.I	[0-07]	Low ambient temp. for LWT add zone cooling WD curve.	R/W	10~25°C, step: 1°C **20°C**		
9.I	[0-0B]	Leaving water value for high ambient temp. for DHW WD curve.	R/W	35~[6-0E]°C, step: 1°C **55°C**		
9.I	[0-0C]	Leaving water value for low ambient temp. for DHW WD curve.	R/W	45~[6-0E]°C, step: 1°C 6**0°C**		
9.I	[0-0D]	High ambient temp. for DHW WD curve.	R/W	10~25°C, step: 1°C **15°C**		
9.I	[0-0E]	Low ambient temp. for DHW WD curve.	R/W	-40~5°C, step: 1°C **-10°C**		
9.I	[1-00]	Low ambient temp. for LWT main zone heating WD curve.	R/W	-40~5°C, step: 1°C **-10°C**		
9.I	[1-01]	High ambient temp. for LWT main zone heating WD curve.	R/W	10~25°C, step: 1°C **15°C**		
9.I	[1-02]	Leaving water value for low ambient temp. for LWT main zone heating WD curve.	R/W	[9-01]~[9-00], step: 1°C **35°C**		
9.I	[1-03]	Leaving water value for high ambient temp. for LWT main zone heating WD curve.	R/W	[9-01]~min(45, [9-00])°C , step: 1°C **25°C**		
9.I	[1-04]	Weather dependent cooling of the main leaving water temperature zone.	R/W	0: Disabled **1: Enabled**		
9.I	[1-05]	Weather dependent cooling of the additional leaving water temperature zone	R/W	0: Disabled **1: Enabled**		
9.I	[1-06]	Low ambient temp. for LWT main zone cooling WD curve.	R/W	10~25°C, step: 1°C **20°C**		
9.I	[1-07]	High ambient temp. for LWT main zone cooling WD curve.	R/W	25~43°C, step: 1°C **35°C**		
9.I	[1-08]	Leaving water value for low ambient temp. for LWT main zone cooling WD curve.	R/W	[9-03]~[9-02]°C, step: 1°C **22°C**		
9.I	[1-09]	Leaving water value for high ambient temp. for LWT main zone cooling WD curve.	R/W	[9-03]~[9-02]°C, step: 1°C **18°C**		
9.I	[1-0A]	What is the averaging time for the outdoor temp?	R/W	**0: No averaging** 1: 12 hours 2: 24 hours 3: 48 hours 4: 72 hours		
9.I	[1-0B]	What is the desired delta T in heating for the main zone?	R/W	3~10°C, step: 1°C **5°C**		
9.I	[1-0C]	What is the desired delta T in heating for the additional zone?	R/W	3~10°C, step: 1°C **5°C**		
9.I	[1-0D]	What is the desired delta T in cooling for the main zone?	R/W	3~10°C, step: 1°C **5°C**		
9.I	[1-0E]	What is the desired delta T in cooling for the additional zone?	R/W	3~10°C, step: 1°C **5°C**		
9.I	[2-00]	When should the disinfection function be executed?	R/W	0: Each day 1: Monday 2: Tuesday 3: Wednesday 4: Thursday **5: Friday** 6: Saturday 7: Sunday		
9.I	[2-01]	Should the disinfection function be executed?	R/W	0: No **1: Yes**		

(*1) *3V*_(*2) *6V*_(*3) *9W*_
(*4) EHB*_(*5) EHV*_
(*6) *X*_(*7) *H*

Field settings table					Installer setting at variance with default value	
Breadcrumb	Field code	Setting name		Range, step **Default value**	Date	Value
9.I	[2-02]	When should the disinfection function start?	R/W	0~23 hour, step: 1 hour **1**		
9.I	[2-03]	What is the disinfection target temperature?	R/W	[E-07]≠1 : 55~75°C, step: 5°C **70°C** [E-07]=1 : 60°C **60°C**		
9.I	[2-04]	How long must the tank temperature be maintained?	R/W	[E-07]≠1: 5~60 min, step: 5 min **10 min** [E-07]=1: 40~60 min, step: 5 min **40 min**		
9.I	[2-05]	Room antifrost temperature	R/W	4~16°C, step: 1°C **12°C**		
9.I	[2-06]	Room frost protection	R/W	0: Disabled **1: Enabled**		
9.I	[2-09]	Adjust the offset on the measured room temperature	R/W	-5~5°C, step: 0,5°C **0°C**		
9.I	[2-0A]	Adjust the offset on the measured room temperature	R/W	-5~5°C, step: 0,5°C **0°C**		
9.I	[2-0B]	What is the required offset on the measured outdoor temp.?	R/W	-5~5°C, step: 0,5°C **0°C**		
9.I	[2-0C]	What emitter type is connected to the main LWT zone?	R/W	**0: Underfloor heating** 1: Fancoil unit 2: Radiator		
9.I	[2-0D]	What emitter type is connected to the additional LWT zone?	R/W	**0: Underfloor heating** 1: Fancoil unit 2: Radiator		
9.I	[2-0E]	What is the maximum allowed current over the heatpump ?	R/W	0~50 A, step: 1 A **50 A**		
9.I	[3-00]	Is auto restart of the unit allowed?	R/W	0: No **1: Yes**		
9.I	[3-01]	--		**0**		
9.I	[3-02]	--		**1**		
9.I	[3-03]	--		**4**		
9.I	[3-04]	--		**2**		
9.I	[3-05]	--		**1**		
9.I	[3-06]	What is the maximum desired room temperature in heating?	R/W	18~30°C, step: 1°C **30°C**		
9.I	[3-07]	What is the mimimum desired room temperature in heating?	R/W	12~18°C, step: 1°C **12°C**		
9.I	[3-08]	What is the maximum desired room temperature in cooling?	R/W	25~35°C, step: 1°C **35°C**		
9.I	[3-09]	What is the minimum desired room temperature in cooling?	R/W	15~25°C, step: 1°C **15°C**		
9.I	[4-00]	What is the BUH operation mode?	R/W	0: Disabled **1: Enabled** 2: Only DHW		
9.I	[4-01]	Which electric heater has priority?	R/W	**0: None** 1: BSH 2: BUH		
9.I	[4-02]	Below which outdoor temperature is heating allowed?	R/W	14~35°C, step: 1°C 2**2°C**		
9.I	[4-03]	Operation permission of the booster heater.	R/W	0: Restricted 1: Allowed 2: Overlap **3: Compressor off** 4: Legionella only		
9.I	[4-04]	Water pipe freeze prevention		0: Continuous pump operation 1: Non continuous pump operation **2: Off**		
9.I	[4-05]	--		**0**		
9.I	[4-06]	Emergency	R/W	**0: Manual** 1: Automatic(normal SH/DHW ON) 2: Auto red SH/DHW ON 3: Auto red SH/DHW OFF 4: SH ON/DHW OFF		
9.I	[4-07]	--		**6**		
9.I	[4-08]	Which power limitation mode is required on the system?	R/W	**0: No limitation** 1: Continuous 2: Digital inputs		
9.I	[4-09]	Which power limitation type is required?	R/W	0: Current **1: Power**		
9.I	[4-0A]	Backup heater configuration	R/W	**0: 1 (*1)** **1: 1/1+2 (*2) (*3)** 2: 1/2 3: 1/2 + 1/1+2 in emergency		
9.I	[4-0B]	Automatic cooling/heating changeover hysteresis.	R/W	1~10°C, step: 0,5°C **1°C**		
9.I	[4-0D]	Automatic cooling/heating changeover offset.	R/W	1~10°C, step: 0,5°C **3°C**		
9.I	[4-0E]	--		**6**		
9.I	[5-00]	Equilibrium: Deactivate backup heater (or external backup heat source in case of a bivalent system) above the equilibrium temperature for space heating?	R/W	0: No **1: Yes**		
9.I	[5-01]	What is the equilibrium temperature for the building?	R/W	-15~35°C, step: 1°C **0°C**		
9.I	[5-02]	Space heating priority.	R/W	**0: Disabled** 1: Enabled		
9.I	[5-03]	Space heating priority temperature.	R/W	-15~35°C, step: 1°C **0°C**		
9.I	[5-04]	Set point correction for domestic hot water temperature.	R/W	0~20°C, step: 1°C **10°C**		
9.I	[5-05]	What is the requested limit for DI1?	R/W	0~50 A, step: 1 A **50 A**		
9.I	[5-06]	What is the requested limit for DI2?	R/W	0~50 A, step: 1 A **50 A**		

(*1) *3V*_(*2) *6V*_(*3) *9W*_
(*4) EHB*_(*5) EHV*_
(*6) *X*_(*7) *H*

Field settings table					Installer setting at variance with default value	
Breadcrumb	Field code	Setting name		Range, step **Default value**	Date	Value
9.I	[5-07]	What is the requested limit for DI3?	R/W	0~50 A, step: 1 A **50 A**		
9.I	[5-08]	What is the requested limit for DI4?	R/W	0~50 A, step: 1 A **50 A**		
9.I	[5-09]	What is the requested limit for DI1?	R/W	0~20 kW, step: 0,5 kW **20 kW**		
9.I	[5-0A]	What is the requested limit for DI2?	R/W	0~20 kW, step: 0,5 kW **20 kW**		
9.I	[5-0B]	What is the requested limit for DI3?	R/W	0~20 kW, step: 0,5 kW **20 kW**		
9.I	[5-0C]	What is the requested limit for DI4?	R/W	0~20 kW, step: 0,5 kW **20 kW**		
9.I	[5-0D]	Backup heater voltage	R/W (*2) R/O (*1) (*3)	**0: 230V, 1~ (*1) (*2)** 1: 230V, 3~ (*2) **2: 400V, 3~ (*3)**		
9.I	[5-0E]	--		**1**		
9.I	[6-00]	The temperature difference determining the heat pump ON temperature.	R/W	2~40°C, step: 1°C **25°C**		
9.I	[6-01]	The temperature difference determining the heat pump OFF temperature.	R/W	0~10°C, step: 1°C **2°C**		
9.I	[6-02]	What is the capacity of the booster heater?	R/W	0~10kW, step: 0,2kW **3kW**		
9.I	[6-03]	What is the capacity of the backup heater step 1?	R/W	0~10kW, step: 0,2kW 2**kW (*2)** **3kW (*1)(*3)**		
9.I	[6-04]	What is the capacity of the backup heater step 2?	R/O (*1) R/W (*2) (*3)	0~10kW, step: 0,2kW **0kW (*1)** **4kW (*2)** **6kW (*3)**		
9.I	[6-05]	--		**0**		
9.I	[6-06]	--		**0**		
9.I	[6-07]	What is the capacity of the bottom plate heater?	R/W	0~200W, step: 10W **0W**		
9.I	[6-08]	What is the hysteresis to be used in reheat mode?	R/W	**2~20°C, step: 1°C** **10°C**		
9.I	[6-09]	--		**0**		
9.I	[6-0A]	What is the desired comfort storage temperature?	R/W	30~[6-0E]°C, step: 1°C **60°C**		
9.I	[6-0B]	What is the desired eco storage temperature?	R/W	30~min(50, [6-0E])°C, step: 1°C **45°C**		
9.I	[6-0C]	What is the desired reheat temperature?	R/W	30~min(50, [6-0E])°C, step: 1°C **45°C**		
9.I	[6-0D]	What is the desired DHW production type?	R/W	0: Reheat only **1: Reheat + sched.** 2: Scheduled only		
9.I	[6-0E]	What is the maximum temperature setpoint?	R/W	(*4) : 40~75°C, step: 1°C **60°C** [E-07]=0 (*4) : 40~80°C, step: 1°C **80°C** [E-07]=5 (*5) : 40~60°C, step: 1°C **60°C**		
9.I	[7-00]	Domestic hot water booster heater overshoot temperature.	R/W	0~4°C, step: 1°C **0°C**		
9.I	[7-01]	Domestic hot water booster heater hysteresis.	R/W	2~40°C, step: 1°C **2°C**		
9.I	[7-02]	How many leaving water temperature zones are there?	R/W	**0: 1 LWT zone** 1: 2 LWT zones		
9.I	[7-03]	--		**2,5**		
9.I	[7-04]	--		**0**		
9.I	[7-05]	Boiler efficiency	R/W	**0: Very high** 1: High 2: Medium 3: Low 4: Very low		
9.I	[7-06]	Compressor forced off	R/W	**0: Disabled** 1: Enabled		
9.I	[7-07]	BBR16 activation	R/W	**0: Disabled** 1: Enabled		
9.I	[8-00]	Minimum running time for domestic hot water operation.	R/W	0~20 min, step 1 min **1 min**		
9.I	[8-01]	Maximum running time for domestic hot water operation.	R/W	5~95 min, step: 5 min **30 min**		
9.I	[8-02]	Anti-recycling time.	R/W	0~10 hour, step: 0,5 hour **0,5 hour [E-07]=1** **3 hour [E-07]≠1**		
9.I	[8-03]	Booster heater delay timer.	R/W	20~95 min, step: 5 min **50 min**		
9.I	[8-04]	Additional running time for the maximum running time.	R/W	0~95 min, step: 5 min **95 min**		
9.I	[8-05]	Allow modulation of the LWT to control the room temp?	R/W	**0: No** 1: Yes		
9.I	[8-06]	Leaving water temperature maximum modulation.	R/W	0~10°C, step: 1°C **5°C**		
9.I	[8-07]	What is the desired comfort main LWT in cooling?	R/W	[9-03]~[9-02], step: 1°C **18°C**		
9.I	[8-08]	What is the desired eco main LWT in cooling?	R/W	[9-03]~[9-02], step: 1°C **20°C**		
9.I	[8-09]	What is the desired comfort main LWT in heating?	R/W	[9-01]~[9-00], step: 1°C **35°C**		
9.I	[8-0A]	What is the desired eco main LWT in heating?	R/W	[9-01]~[9-00], step: 1°C **33°C**		
9.I	[8-0B]	--		**13**		
9.I	[8-0C]	--		**10**		
9.I	[8-0D]	--		**16**		

(*1) *3V*_(*2) *6V*_(*3) *9W*_
(*4) EHB*_(*5) EHV*_
(*6) *X*_(*7) *H*

Field settings table					Installer setting at variance with default value	
Breadcrumb	Field code	Setting name		Range, step **Default value**	Date	Value
9.I	[9-00]	What is the maximum desired LWT for main zone in heating?	R/W	[2-0C]=2: 37~65, step: 1°C **55°C** [2-0C]≠2: 37~55, step: 1°C **55°C**		
9.I	[9-01]	What is the mimimum desired LWT for main zone in heating?	R/W	15~37°C, step: 1°C **25°C**		
9.I	[9-02]	What is the maximum desired LWT for main zone in cooling?	R/W	18~22°C, step: 1°C **22°C**		
9.I	[9-03]	What is the mimimum desired LWT for main zone in cooling?	R/W	5~18°C, step: 1°C **5°C**		
9.I	[9-04]	Leaving water temperature overshoot temperature.	R/W	1~4°C, step: 1°C **1°C**		
9.I	[9-05]	What is the mimimum desired LWT for add. zone in heating?	R/W	15~37°C, step: 1°C **25°C**		
9.I	[9-06]	What is the maximum desired LWT for add. zone in heating?	R/W	[2-0D]=2: 37~65, step: 1°C **55°C** [2-0D]≠2: 37~55, step: 1°C **55°C**		
9.I	[9-07]	What is the mimimum desired LWT for add. zone in cooling?	R/W	5~18°C, step: 1°C **5°C**		
9.I	[9-08]	What is the maximum desired LWT for add. zone in cooling?	R/W	18~22°C, step: 1°C **22°C**		
9.I	[9-09]	What is the allowed undershoot in cooling?	R/W	1~18°C, step: 1°C **18°C**		
9.I	[9-0A]	Heating comfort setpoint	R/W	[3-07]～[3-06]°C, step: 0,5°C **23°C**		
9.I	[9-0B]	Cooling comfort setpoint	R/W	[3-09]～[3-08]°C, step: 0,5°C **23°C**		
9.I	[9-0C]	Room temperature hysteresis.	R/W	1~6°C, step: 0,5°C **1 °C**		
9.I	[9-0D]	Pump speed limitation	R/W	0~8, step:1 0: No limitation 1~4: 90~60% pump speed 5~8: 90~60% pump speed during sampling **6**		
9.I	[9-0E]	--		**6**		
9.I	[C-00]	Domestic heating water priority.	R/W	**0: Solar priority** 1: Heat pump priority		
9.I	[C-01]	--		**0**		
9.I	[C-02]	Is an external backup heat source connected?	R/W	**0: No** 1: Bivalent		
9.I	[C-03]	Bivalent activation temperature.	R/W	-25~25°C, step: 1°C 0°C		
9.I	[C-04]	Bivalent hysteresis temperature.	R/W	2~10°C, step 1°C **3°C**		
9.I	[C-05]	What is the thermo request contact type for the main zone?	R/W	0: - 1: 1 contact **2: 2 contacts**		
9.I	[C-06]	What is the thermo request contact type for the add. zone?	R/W	0: - 1: 1 contact **2: 2 contacts**		
9.I	[C-07]	What is the unit control method in space operation?	R/W	**0: LWT control** 1: Ext RT control 2: RT control		
9.I	[C-08]	Which type of external sensor is installed?	R/W	**0: No** 1: Outdoor sensor 2: Room sensor		
9.I	[C-09]	What is the required alarm output contact type?	R/W	**0: Normally open** 1: Normally closed		
9.I	[C-0A]	--		**0**		
9.I	[C-0B]	--		**0**		
9.I	[C-0C]	--		**0**		
9.I	[C-0D]	--		**0**		
9.I	[C-0E]	--		**0**		
9.I	[D-00]	Which heaters are permitted if prefer. kWh rate PS is cut?	R/W	**0: None** 1: BSH only 2: BUH only 3: All heaters		
9.I	[D-01]	Contact type of preferential kWh rate PS installation?	R/W	**0: No** 1: Active open 2: Active closed 3: Smart grid		
9.I	[D-02]	Which type of DHW pump is installed?	R/W	0: No 1: Secondary rtrn 2: Disinf. Shunt		
9.I	[D-03]	Leaving water temperature compensation around 0°C.	R/W	0: No **1: increase 2°C, span 4°C** 2: increase 4°C, span 4°C 3: increase 2°C, span 8°C 4: increase 4°C, span 8°C		
9.I	[D-04]	Is a demand PCB connected?	R/W	**0: No** 1: Pwr consmp ctrl		
9.I	[D-05]	Is the pump allowed to run if prefer. kWh rate PS is cut?	R/W	0: Forced off **1: As normal**		
9.I	[D-07]	Is a solar kit connected?	R/W	**0: No** 1: Yes		

(*1) *3V*_(*2) *6V*_(*3) *9W*_
(*4) EHB*_(*5) EHV*_
(*6) *X*_(*7) *H*

Field settings table					Installer setting at variance with default value	
Breadcrumb	Field code	Setting name		Range, step **Default value**	Date	Value
9.I	[D-08]	Is an external kWh meter used for power measurement?	R/W	**0: No** 1: 0,1 pulse/kWh 2: 1 pulse/kWh 3: 10 pulse/kWh 4: 100 pulse/kWh 5: 1000 pulse/kWh		
9.I	[D-09]	Is an external kWh meter used for power measurement?	R/W	**0: No** 1: 0,1 pulse/kWh 2: 1 pulse/kWh 3: 10 pulse/kWh 4: 100 pulse/kWh 5: 1000 pulse/kWh 6: 100 pulse/kWh (PV meter) 7: 1000 pulse/kWh (PV meter) 8: 1 pulse/m³ (gas meter) 9: 10 pulses/m³ (gas meter) 10: 100 pulses/m³ (gas meter)		
9.I	[D-0A]	--		**0**		
9.I	[D-0B]	--		**2**		
9.I	[D-0C]	--		**0**		
9.I	[D-0D]	--		**0**		
9.I	[D-0E]	--		**0**		
9.I	[E-00]	Which type of unit is installed?	R/O	0~5 **0: LT split**		
9.I	[E-01]	Which type of compressor is installed?	R/O	**0**		
9.I	[E-02]	What is the indoor unit software type?	R/W (*6) R/O (*7)	**0: Reversible (*6)** **1: Heating only (*7)**		
9.I	[E-03]	What is the number of backup heater steps?	R/O	**2: 3V (*1)** **3: 6V (*2)** **4: 9W (*3)**		
9.I	[E-04]	Is the power saving function available on the outdoor unit?	R/O	0: No **1: Yes**		
9.I	[E-05]	Do NOT use [E-05], [E-06] and [E-07] anymore as they are replaced by one menu structure setting [9.2.1].	—	**—** **—**		
9.I	[E-06]		—	— **—**		
9.I	[E-07]		—	— —		
9.I	[E-08]	Power saving function for outdoor unit.	R/W	0: Disabled **1: Enabled**		
9.I	[E-09]	--		**1**		
9.I	[E-0A]	--		**0**		
9.I	[E-0B]	Is a bi-zone kit installed?		**0**		
9.I	[E-0C]	--		**0**		
9.I	[E-0D]	Is glycol present in the system?		**0**		
9.I	[E-0E]	--		**0**		
9.I	[F-00]	Pump operation allowed outside range.	R/W	**0: Disabled** 1: Enabled		
9.I	[F-01]	Above which outdoor temperature is cooling allowed?	R/W	10~35°C, step: 1°C **20°C**		
9.I	[F-02]	Bottom plate heater ON temperature.	R/W	3~10°C, step: 1°C **3°C**		
9.I	[F-03]	Bottom plate heater hysteresis.	R/W	2~5°C, step: 1°C **5°C**		
9.I	[F-04]	Is a bottom plate heater connected?	R/W	**0: No** 1: Yes		
9.I	[F-05]	--		**0**		
9.I	[F-09]	Pump operation during flow abnormality.	R/W	**0: Disabled** 1: Enabled		
9.I	[F-0A]	--		**0**		
9.I	[F-0B]	Close shut-off valve during thermo OFF?	R/W	**0: No** 1: Yes		
9.I	[F-0C]	Close shut-off valve during cooling?	R/W	0: No **1: Yes**		
9.I	[F-0D]	What is the pump operation mode?	R/W	0: Continuous **1: Sample** 2: Request		

(*1) *3V*_(*2) *6V*_(*3) *9W*_
(*4) EHB*_(*5) EHV*_
(*6) *X*_(*7) *H*



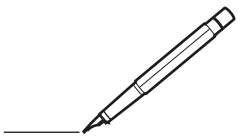

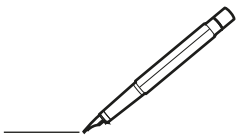

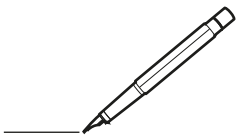

Copyright 2020 Daikin

DAIKIN EUROPE N.V.
Zandvoordestraat 300, B-8400 Oostende, Belgium

4P629085-1F 2026.09