Installer reference guide

Daikin Altherma 3 GEO

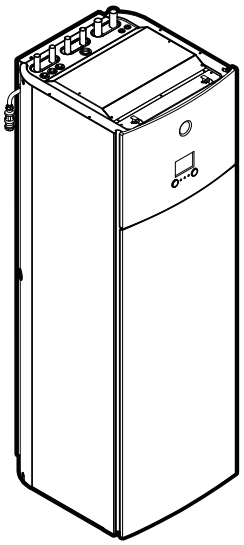

EGSAH06UD▲9W▼
EGSAH10UD▲9W▼

EGSAX06UD▲9W▼
EGSAX10UD▲9W▼

▲= A, B, C, …, Z
▼= , , 1, 2, 3, …, 9

Table of contents

1 About this document 6
1.1 Meaning of warnings and symbols 7
1.2 Installer reference guide at a glance 8

2 General safety precautions 10
2.1 For the installer 10
2.1.1 General 10
2.1.2 Installation site 11
2.1.3 Refrigerant — in case of R410A or R32 11
2.1.4 Brine 13
2.1.5 Water 13
2.1.6 Electrical 13

3 Specific installer safety instructions 16

4 About the box 21
4.1 Overview: About the box 21
4.2 Indoor unit 21
4.2.1 To unpack the indoor unit 21
4.2.2 To remove the accessories from the indoor unit 22
4.2.3 To handle the indoor unit 22
4.3 Domestic hot water tank kit 23
4.3.1 To remove the accessories from the domestic hot water tank kit 23
4.4 Checklist for the required DHW accessories 23

5 About the units and options 24
5.1 Overview: About the units and options 24
5.2 Identification 24
5.2.1 Identification label: Indoor unit 24
5.3 Components 25
5.4 Possible options for the indoor unit 27

6 Application guidelines 29
6.1 Overview: Application guidelines 29
6.2 Setting up the space heating/cooling system 30
6.2.1 Single room 30
6.2.2 Multiple rooms – One LWT zone 35
6.2.3 Multiple rooms – Two LWT zones 39
6.3 Setting up an auxiliary heat source for space heating 42
6.4 Setting up the domestic hot water tank 45
6.4.1 System layout – Integrated DHW tank 45
6.4.2 Selecting the volume and desired temperature for the DHW tank 45
6.4.3 Setup and configuration – DHW tank 46
6.4.4 DHW pump for instant hot water 47
6.4.5 DHW pump for disinfection 47
6.5 Setting up the energy metering 48
6.5.1 Produced heat 48
6.5.2 Consumed energy 48
6.6 Setting up the power consumption control 51
6.6.1 Permanent power limitation 52
6.6.2 Power limitation activated by digital inputs 53
6.6.3 Power limitation process 54
6.6.4 Current limitation by current sensors 55
6.6.5 BBR16 power limitation 55
6.7 Setting up an external temperature sensor 56
6.8 Setting up passive cooling 57
6.9 Setting up the brine low pressure switch 58

7 Unit installation 60
7.1 Preparing the installation site 60
7.1.1 Installation site requirements of the indoor unit 60
7.2 Opening and closing the unit 61
7.2.1 About opening the unit 61
7.2.2 To open the indoor unit 62
7.2.3 To remove the hydro module from the unit 65
7.2.4 To close the indoor unit 67

7.3 Mounting the indoor unit ... 67
7.3.1 About mounting the indoor unit ... 67
7.3.2 Precautions when mounting the indoor unit ... 68
7.3.3 To install the indoor unit ... 68
7.3.4 To connect the drain hose to the drain ... 69

8 Piping installation 70
8.1 Preparing piping ... 70
8.1.1 Circuit requirements ... 70
8.1.2 Formula to calculate the expansion vessel pre-pressure ... 74
8.1.3 To check the water volume and flow rate of the space heating circuit and brine circuit ... 75
8.1.4 Changing the pre-pressure of the expansion vessel ... 76
8.2 Connecting the brine piping ... 76
8.2.1 About connecting the brine piping ... 76
8.2.2 Precautions when connecting the brine piping ... 76
8.2.3 To connect the brine piping ... 76
8.2.4 To connect the brine level vessel ... 77
8.2.5 To connect the brine filling kit ... 78
8.2.6 To fill the brine circuit ... 78
8.2.7 To insulate the brine piping ... 79
8.3 Connecting water piping ... 79
8.3.1 About connecting the water piping ... 79
8.3.2 Precautions when connecting the water piping ... 79
8.3.3 To connect the water piping ... 79
8.3.4 To connect the water piping for domestic hot water ... 81
8.3.5 To connect the recirculation piping ... 83
8.3.6 To fill the space heating circuit ... 84
8.3.7 To fill the domestic hot water tank ... 84
8.3.8 To check for water leaks ... 84
8.3.9 To insulate the water piping ... 85

9 Electrical installation 86
9.1 About connecting the electrical wiring ... 86
9.1.1 Precautions when connecting the electrical wiring ... 86
9.1.2 Guidelines when connecting the electrical wiring ... 87
9.1.3 About electrical compliance ... 88
9.1.4 Safety device requirements ... 89
9.2 Overview of electrical connections for external and internal actuators ... 89
9.2.1 To connect the main power supply ... 91
9.2.2 To connect the remote outdoor sensor ... 97
9.2.3 To connect the shut-off valve ... 98
9.2.4 To connect the electricity meters ... 99
9.2.5 To connect the domestic hot water pump ... 99
9.2.6 To connect the alarm output ... 100
9.2.7 To connect the space cooling/heating ON/OFF output ... 102
9.2.8 To connect the changeover to external heat source ... 103
9.2.9 To connect the power consumption digital inputs ... 104
9.2.10 To connect the safety thermostat (normally closed contact) ... 105
9.2.11 To connect the brine low pressure switch ... 106
9.2.12 To connect the thermostat for passive cooling ... 108

10 LAN adapter 109
10.1 About the LAN adapter ... 109
10.1.1 System layout ... 110
10.1.2 System requirements ... 112
10.1.3 On-site installation requirements ... 112
10.2 Connecting the electrical wiring ... 113
10.2.1 Overview of electrical connections ... 113
10.2.2 Router ... 115
10.2.3 Electricity meter ... 116
10.2.4 Solar inverter/energy management system ... 118
10.3 Starting up the system ... 121
10.4 Configuration – LAN adapter ... 121
10.4.1 Overview: Configuration ... 121
10.4.2 Configuring the adapter for app control ... 122
10.4.3 Configuring the adapter for the Smart Grid application ... 122
10.4.4 Updating software ... 122
10.4.5 Configuration web interface ... 123
10.4.6 System information ... 124
10.4.7 Factory reset ... 125

10.4.8 Network settings ... 126
10.5 Smart Grid application ... 128
10.5.1 Smart Grid settings ... 130
10.5.2 Operation modes ... 132
10.5.3 System requirements ... 133
10.6 Troubleshooting – LAN adapter ... 134
10.6.1 Overview: Troubleshooting ... 134
10.6.2 Solving problems based on symptoms – LAN adapter ... 134
10.6.3 Solving problems based on error codes – LAN adapter ... 135

11 Configuration 137
11.1 Overview: Configuration ... 137
11.1.1 To access the most used commands ... 138
11.1.2 To connect the PC cable to the switch box ... 140
11.2 Configuration wizard ... 140
11.3 Possible screens ... 142
11.3.1 Possible screens: Overview ... 142
11.3.2 Home screen ... 142
11.3.3 Main menu screen ... 145
11.3.4 Menu screen ... 146
11.3.5 Setpoint screen ... 146
11.3.6 Detailed screen with values ... 147
11.3.7 Schedule screen: Example ... 147
11.4 Weather-dependent curve ... 151
11.4.1 What is a weather-dependent curve? ... 151
11.4.2 2-points curve ... 152
11.4.3 Slope-offset curve ... 153
11.4.4 Using weather-dependent curves ... 154
11.5 Settings menu ... 156
11.5.1 Malfunctioning ... 156
11.5.2 Room ... 157
11.5.3 Main zone ... 160
11.5.4 Additional zone ... 167
11.5.5 Space heating/cooling ... 172
11.5.6 Tank ... 180
11.5.7 User settings ... 188
11.5.8 Information ... 191
11.5.9 Installer settings ... 192
11.5.10 Operation ... 208
11.6 Menu structure: Overview user settings ... 209
11.7 Menu structure: Overview installer settings ... 210

12 Commissioning 211
12.1 Overview: Commissioning ... 211
12.2 Precautions when commissioning ... 212
12.3 Checklist before commissioning ... 212
12.4 Checklist during commissioning ... 213
12.4.1 Air purge function on the water circuit ... 213
12.4.2 Air purge function on the brine circuit ... 215
12.4.3 To perform an operation test run ... 216
12.4.4 To perform an actuator test run ... 216
12.4.5 Underfloor heating screed dryout ... 218
12.4.6 To start or stop 10-day brine pump operation ... 221

13 Hand-over to the user 222

14 Maintenance and service 223
14.1 Maintenance safety precautions ... 223
14.2 Yearly maintenance ... 223
14.2.1 Yearly maintenance: overview ... 223
14.2.2 Yearly maintenance: instructions ... 224
14.3 To drain the domestic hot water tank ... 227
14.4 To inspect the inside of the domestic hot water tank ... 228

15 Troubleshooting 229
15.1 Overview: Troubleshooting ... 229
15.2 Precautions when troubleshooting ... 229
15.3 Solving problems based on symptoms ... 230
15.3.1 Symptom: The unit is NOT heating as expected ... 230
15.3.2 Symptom: The compressor does NOT start (space heating or domestic water heating) ... 230
15.3.3 Symptom: The pump is making noise (cavitation) ... 231

15.3.4 Symptom: The pressure relief valve opens ... 231
15.3.5 Symptom: The pressure relief valve leaks ... 232
15.3.6 Symptom: The space is NOT sufficiently heated at low outdoor temperatures ... 232
15.3.7 Symptom: The pressure at the tapping point is temporarily unusually high ... 233
15.3.8 Symptom: Tank disinfection function is NOT completed correctly (AH-error) ... 233
15.4 Solving problems based on error codes ... 234
15.4.1 To display the help text in case of a malfunction ... 234
15.4.2 Error codes: Overview ... 234

16 Disposal 239

17 Technical data 240

17.1 Piping diagram: Indoor unit ... 241
17.2 Wiring diagram: Indoor unit ... 242
17.3 ESP curve: Indoor unit ... 248
17.4 Technical specifications: Domestic hot water tank ... 249
17.4.1 Test results in accordance with EN12897 (2016) ... 249
17.4.2 Warning label ... 249

18 Glossary 250

19 Field settings table 251

20 Data book 262

Specifications ... 263
Technical and electrical specifications ... 264
Options ... 275
Options ... 276
Capacity tables ... 277
Capacity table legend ... 278
Cooling capacity tables ... 279
Heating capacity tables ... 280
Certification programs ... 281
Dimensional drawings ... 283
Dimensional drawings ... 284
Centre of gravity ... 285
Centre of gravity ... 286
Piping diagrams ... 287
Piping diagrams ... 288
Wiring diagrams ... 289
Wiring diagrams ... 290
External connection diagrams ... 295
External connection diagrams ... 296
Sound data ... 297
Sound power spectrum ... 298
Installation ... 300
Installation method ... 301
Operation range ... 302
Operation range ... 303
Hydraulic performance ... 304
Static pressure drop unit ... 305

1 About this document

INFORMATION

Make sure that the user has the printed documentation and ask him/her to keep it for future reference.

Target audience

Authorised installers

Documentation set

This document is part of a documentation set. The complete set consists of:

- **General safety precautions:**
  - Safety instructions that you must read before installing
  - Format: Paper (in the box of the unit)
- **Operation manual:**
  - Quick guide for basic usage
  - Format: Paper (in the box of the unit)
- **User reference guide:**
  - Detailed step-by-step instructions and background information for basic and advanced usage
  - Format: Digital files on https://www.daikin.eu. Use the search function 🔍 to find your model.
- **Installation manual:**
  - Installation instructions
  - Format: Paper (in the box of the unit)
- **Installer reference guide:**
  - Preparation of the installation, good practices, reference data, …
  - Format: Digital files on https://www.daikin.eu. Use the search function 🔍 to find your model.
- **Addendum book for optional equipment:**
  - Additional info about how to install optional equipment
  - Format: Paper (in the box of the unit) + Digital files on https://www.daikin.eu. Use the search function 🔍 to find your model.

Latest revisions of the supplied documentation may be available on the regional Daikin website or via your dealer.

The original documentation is written in English. All other languages are translations.

Technical engineering data

- A **subset** of the latest technical data is available on the regional Daikin website (publicly accessible).
- The **full set** of latest technical data is available on the Daikin Business Portal (authentication required).

Online tools

In addition to the documentation set, some online tools are available for installers:

- **Heating Solutions Navigator**
  - Digital toolbox that offers a variety of tools to facilitate the installation and configuration of heating systems.
  - To access Heating Solutions Navigator, registration to the Stand By Me platform is required. For more information, see https://professional.standbyme.daikin.eu.
- **Daikin e-Care**
  - Mobile app for installers and service technicians that allows you to register, configure and troubleshoot heating systems.
  - The mobile app can be downloaded for iOS and Android devices using the QR codes below. Registration to the Stand By Me platform is required to access the app.

App Store

Google Play

1.1 Meaning of warnings and symbols

DANGER

Indicates a situation that results in death or serious injury.

DANGER: RISK OF ELECTROCUTION

Indicates a situation that could result in electrocution.

DANGER: RISK OF BURNING/SCALDING

Indicates a situation that could result in burning/scalding because of extreme hot or cold temperatures.

DANGER: RISK OF EXPLOSION

Indicates a situation that could result in explosion.

WARNING

Indicates a situation that could result in death or serious injury.

WARNING: FLAMMABLE MATERIAL

CAUTION

Indicates a situation that could result in minor or moderate injury.

NOTICE

Indicates a situation that could result in equipment or property damage.

INFORMATION

Indicates useful tips or additional information.

Symbols used on the unit:

Symbol	Explanation
	Before installation, read the installation and operation manual, and the wiring instruction sheet.
	Before performing maintenance and service tasks, read the service manual.
	For more information, see the installer and user reference guide.
	The unit contains rotating parts. Be careful when servicing or inspecting the unit.

Symbols used in the documentation:

Symbol	Explanation
	Indicates a figure title or a reference to it. **Example:** "1–3 Figure title" means "Figure 3 in chapter 1".
	Indicates a table title or a reference to it. **Example:** "1–3 Table title" means "Table 3 in chapter 1".

1.2 Installer reference guide at a glance

Chapter	Description
About this document	What documentation exists for the installer
General safety precautions	Safety instructions that you must read before installing
Specific installer safety instructions	
About the box	How to unpack the units and remove their accessories
About the units and options	▪ How to identify the units ▪ Possible combinations of units and options
Application guidelines	Various installation setups of the system
Unit installation	What to do and know to install the system, including information on how to prepare for an installation
Piping installation	What to do and know to install the piping of the system, including information on how to prepare for an installation
Electrical installation	What to do and know to install the electrical components of the system, including information on how to prepare for an installation

Chapter	Description
LAN adapter	What to do and know to integrate the unit (with integrated LAN adapter) into one of the following applications: ▪ App control (only) ▪ Smart Grid application (only) ▪ App control + Smart Grid application
Configuration	What to do and know to configure the system after it is installed
Commissioning	What to do and know to commission the system after it is configured
Hand-over to the user	What to give and explain to the user
Maintenance and service	How to maintain and service the units
Troubleshooting	What to do in case of problems
Disposal	How to dispose of the system
Technical data	Specifications of the system
Glossary	Definition of terms
Field settings table	Table to be filled in by the installer, and kept for future reference **Note:** There is also an installer settings table in the user reference guide. This table has to be filled in by the installer and handed over to the user.

2 General safety precautions

2.1 For the installer

2.1.1 General

If you are NOT sure how to install or operate the unit, contact your dealer.

WARNING

Improper installation or attachment of equipment or accessories could result in electrical shock, short-circuit, leaks, fire or other damage to the equipment. ONLY use accessories, optional equipment and spare parts made or approved by Daikin.

WARNING

Make sure installation, testing and applied materials comply with applicable legislation (on top of the instructions described in the Daikin documentation).

CAUTION

Wear adequate personal protective equipment (protective gloves, safety glasses,...) when installing, maintaining or servicing the system.

WARNING

Tear apart and throw away plastic packaging bags so that nobody, especially children, can play with them. Possible risk: suffocation.

DANGER: RISK OF BURNING/SCALDING

- Do NOT touch the refrigerant piping, water piping or internal parts during and immediately after operation. It could be too hot or too cold. Give it time to return to normal temperature. If you MUST touch it, wear protective gloves.
- Do NOT touch any accidental leaking refrigerant.

WARNING

Provide adequate measures to prevent that the unit can be used as a shelter by small animals. Small animals that make contact with electrical parts can cause malfunctions, smoke or fire.

CAUTION

- Do NOT place any objects or equipment on top of the unit.
- Do NOT sit, climb or stand on the unit.

In accordance with the applicable legislation, it might be necessary to provide a logbook with the product containing at least: information on maintenance, repair work, results of tests, stand-by periods,...

Also, at least, following information MUST be provided at an accessible place at the product:

- Instructions for shutting down the system in case of an emergency
- Name and address of fire department, police and hospital
- Name, address and day and night telephone numbers for obtaining service

In Europe, EN378 provides the necessary guidance for this logbook.

2.1.2 Installation site

- Provide sufficient space around the unit for servicing and air circulation.
- Make sure the installation site withstands the weight and vibration of the unit.
- Make sure the area is well ventilated. Do NOT block any ventilation openings.
- Make sure the unit is level.

Do NOT install the unit in the following places:

- In potentially explosive atmospheres.
- In places where there is machinery that emits electromagnetic waves. Electromagnetic waves may disturb the control system, and cause malfunction of the equipment.
- In places where there is a risk of fire due to the leakage of flammable gases (example: thinner or gasoline), carbon fibre, ignitable dust.
- In places where corrosive gas (example: sulphurous acid gas) is produced. Corrosion of copper pipes or soldered parts may cause the refrigerant to leak.

2.1.3 Refrigerant — in case of R410A or R32

If applicable. See the installation manual or installer reference guide of your application for more information.

NOTICE

Make sure refrigerant piping installation complies with applicable legislation. In Europe, EN378 is the applicable standard.

NOTICE

Make sure the field piping and connections are NOT subjected to stress.

WARNING

During tests, NEVER pressurise the product with a pressure higher than the maximum allowable pressure (as indicated on the nameplate of the unit).

WARNING

Take sufficient precautions in case of refrigerant leakage. If refrigerant gas leaks, ventilate the area immediately. Possible risks:

- Excessive refrigerant concentrations in a closed room can lead to oxygen deficiency.
- Toxic gas might be produced if refrigerant gas comes into contact with fire.

DANGER: RISK OF EXPLOSION

Pump down – Refrigerant leakage. If you want to pump down the system, and there is a leak in the refrigerant circuit:

- Do NOT use the unit's automatic pump down function, with which you can collect all refrigerant from the system into the outdoor unit. **Possible consequence:** Self-combustion and explosion of the compressor because of air going into the operating compressor.
- Use a separate recovery system so that the unit's compressor does NOT have to operate.

WARNING

ALWAYS recover the refrigerant. Do NOT release them directly into the environment. Use a vacuum pump to evacuate the installation.

NOTICE

After all the piping has been connected, make sure there is no gas leak. Use nitrogen to perform a gas leak detection.

NOTICE

- To avoid compressor breakdown, do NOT charge more than the specified amount of refrigerant.
- When the refrigerant system is to be opened, refrigerant MUST be treated according to the applicable legislation.

WARNING

Make sure there is no oxygen in the system. Refrigerant may ONLY be charged after performing the leak test and the vacuum drying.

Possible consequence: Self-combustion and explosion of the compressor because of oxygen going into the operating compressor.

- In case recharge is required, see the nameplate of the unit. It states the type of refrigerant and necessary amount.
- The unit is factory charged with refrigerant and depending on pipe sizes and pipe lengths some systems require additional charging of refrigerant.
- ONLY use tools exclusively for the refrigerant type used in the system, this to ensure pressure resistance and prevent foreign materials from entering into the system.
- Charge the liquid refrigerant as follows:

If	Then
A siphon tube is present (i.e., the cylinder is marked with "Liquid filling siphon attached")	Charge with the cylinder upright. 
A siphon tube is NOT present	Charge with the cylinder upside down. 

- Open refrigerant cylinders slowly.

- Charge the refrigerant in liquid form. Adding it in gas form may prevent normal operation.

CAUTION

When the refrigerant charging procedure is done or when pausing, close the valve of the refrigerant tank immediately. If the valve is NOT closed immediately, remaining pressure might charge additional refrigerant. **Possible consequence:** Incorrect refrigerant amount.

2.1.4 Brine

If applicable. See the installation manual or installer reference guide of your application for more information.

WARNING

The selection of the brine MUST be in accordance with the applicable legislation.

WARNING

Take sufficient precautions in case of brine leakage. If brine leaks, ventilate the area immediately and contact your local dealer.

WARNING

The ambient temperature inside the unit can get much higher than that of the room, e.g. 70°C. In case of a brine leak, hot parts inside the unit can create a hazardous situation.

WARNING

The use and installation of the application MUST comply with the safety and environmental precautions specified in the applicable legislation.

2.1.5 Water

If applicable. See the installation manual or installer reference guide of your application for more information.

NOTICE

Make sure water quality complies with EU directive 2020/2184.

2.1.6 Electrical

DANGER: RISK OF ELECTROCUTION

- Turn OFF all power supply before removing the switch box cover, connecting electrical wiring or touching electrical parts.
- Disconnect the power supply for more than 10 minutes, and measure the voltage at the terminals of main circuit capacitors or electrical components before servicing. The voltage MUST be less than 50 V DC before you can touch electrical components. For the location of the terminals, see the wiring diagram.
- Do NOT touch electrical components with wet hands.
- Do NOT leave the unit unattended when the service cover is removed.

WARNING

If NOT factory installed, a main switch or other means for disconnection, having a contact separation in all poles providing full disconnection under overvoltage category III condition, MUST be installed in the fixed wiring.

WARNING

- ONLY use copper wires.
- Make sure the field wiring complies with the applicable legislation.
- All field wiring MUST be performed in accordance with the wiring diagram supplied with the product.
- NEVER squeeze bundled cables and make sure they do NOT come in contact with the piping and sharp edges. Make sure no external pressure is applied to the terminal connections.
- Make sure to install earth wiring. Do NOT earth the unit to a utility pipe, surge absorber, or telephone earth. Incomplete earth may cause electrical shock.
- Make sure to use a dedicated power circuit. NEVER use a power supply shared by another appliance.
- Make sure to install the required fuses or circuit breakers.
- Make sure to install an earth leakage protector. Failure to do so may cause electrical shock or fire.
- When installing the earth leakage protector, make sure it is compatible with the inverter (resistant to high frequency electric noise) to avoid unnecessary opening of the earth leakage protector.

CAUTION

- When connecting the power supply: connect the earth cable first, before making the current-carrying connections.
- When disconnecting the power supply: disconnect the current-carrying cables first, before separating the earth connection.
- The length of the conductors between the power supply stress relief and the terminal block itself MUST be as such that the current-carrying wires are tautened before the earth wire is in case the power supply is pulled loose from the stress relief.

NOTICE

Precautions when laying power wiring:



- Do NOT connect wiring of different thicknesses to the power terminal block (slack in the power wiring may cause abnormal heat).
- When connecting wiring which is the same thickness, do as shown in the figure above.
- For wiring, use the designated power wire and connect firmly, then secure to prevent outside pressure being exerted on the terminal board.
- Use an appropriate screwdriver for tightening the terminal screws. A screwdriver with a small head will damage the head and make proper tightening impossible.
- Over-tightening the terminal screws may break them.

WARNING

- After finishing the electrical work, confirm that each electrical component and terminal inside the electrical components box is connected securely.
- Make sure all covers are closed before starting up the unit.

NOTICE

ONLY applicable if the power supply is three-phase, and the compressor has an ON/OFF starting method.

If there exists the possibility of reversed phase after a momentary black out and the power goes ON and OFF while the product is operating, attach a reversed phase protection circuit locally. Running the product in reversed phase can break the compressor and other parts.

3 Specific installer safety instructions

Always observe the following safety instructions and regulations.

Application guidelines (see "6 Application guidelines" [▶ 29])

CAUTION

If there is more than one leaving water zone, ALWAYS install a mixing valve station in the main zone to decrease (in heating)/increase (in cooling) the leaving water temperature when the additional zone has demand.

Installation site (see "7.1 Preparing the installation site" [▶ 60])

WARNING

Follow the service space dimensions in this manual for correct installation of the unit. See "7.1.1 Installation site requirements of the indoor unit" [▶ 60].

WARNING

The appliance shall be stored in a room without continuously operating ignition sources (example: open flames, an operating gas appliance or an operating electric heater).

Special requirements for R32 (see "Special requirements for R32" [▶ 61])

WARNING

- Do NOT pierce or burn refrigerant cycle parts.
- Be aware that the refrigerant inside the system is odourless.

WARNING

Make sure installation, servicing, maintenance and repair comply with instructions from Daikin and with applicable legislation and are executed ONLY by authorised persons.

Opening and closing the unit (see "7.2 Opening and closing the unit" [▶ 61])

DANGER: RISK OF ELECTROCUTION

Do NOT leave the unit unattended when the service cover is removed.

DANGER: RISK OF BURNING/SCALDING

Mounting the indoor unit (see "7.3 Mounting the indoor unit" [▶ 67])

WARNING

Fixing method of the indoor unit MUST be in accordance with the instructions from this manual. See "7.3 Mounting the indoor unit" [▶ 67].

Piping installation (see "8 Piping installation" [▶ 70])

WARNING

Field piping method MUST be in accordance with the instructions from this manual. See "8 Piping installation" [▶ 70].

DANGER: RISK OF BURNING/SCALDING

WARNING

Provide adequate measures to prevent that the unit can be used as a shelter by small animals. Small animals that make contact with electrical parts can cause malfunctions, smoke or fire.

WARNING

Some sections of the refrigerant circuit may be isolated from other sections caused by components with specific functions (e.g. valves). The refrigerant circuit therefore features additional service ports for vacuuming, pressure relief or pressurizing the circuit.

In case it is required to perform **brazing** on the unit, ensure that there is no pressure remaining inside the unit. Internal pressures need to be released with ALL the service ports indicated on the figures below opened. The location is depending on model type.

WARNING

- Only use R32 as refrigerant. Other substances may cause explosions and accidents.
- R32 contains fluorinated greenhouse gases. Its global warming potential (GWP) value is 675. Do NOT vent these gases into the atmosphere.
- When charging refrigerant, ALWAYS use protective gloves and safety glasses.

WARNING

The discharge pipes from the pressure relief valves MUST terminate in a safe and visible position without forming any risk to persons in the vicinity.

WARNING

- Discharge piping, tundish, drain valves, etc. MUST be positioned away from any electrical components.
- The discharge pipe away from the tundish MUST terminate in a safe, visible position without forming any risk to persons in the vicinity.

WARNING

- Do NOT install any valves between the domestic hot water tank and relief valves/ expansion vessel.
- Do NOT install shut-off valves between the expansion relief valve and the domestic hot water tank.

WARNING

Install the tundish away from any electrical device. **Possible consequence:** Electrical shock or fire.

In case of freeze protection by glycol:

WARNING

Ethylene glycol is toxic.

WARNING

Due to the presence of glycol, corrosion of the system is possible. Uninhibited glycol will turn acidic under the influence of oxygen. This process is accelerated by the presence of copper and high temperatures. The acidic uninhibited glycol attacks metal surfaces and forms galvanic corrosion cells that cause severe damage to the system. Therefore it is important that:

- the water treatment is correctly executed by a qualified water specialist,
- a glycol with corrosion inhibitors is selected to counteract acids formed by the oxidation of glycols,
- no automotive glycol is used because their corrosion inhibitors have a limited lifetime and contain silicates which can foul or plug the system,
- galvanized pipes are NOT used in glycol systems since the presence may lead to the precipitation of certain components in the glycol's corrosion inhibitor.

Electrical installation (see "9 Electrical installation" [▶ 86])

DANGER: RISK OF ELECTROCUTION

WARNING

Electrical wiring connection method MUST be in accordance with the instructions from:

- This manual. See "9 Electrical installation" [▶ 86].
- The wiring diagram, which is delivered with the unit, located on the inside of the indoor unit switch box cover. For a translation of its legend, see "17.2 Wiring diagram: Indoor unit" [▶ 242].

WARNING

- If the power supply has a missing or wrong N-phase, equipment might break down.
- Establish proper earthing. Do NOT earth the unit to a utility pipe, surge absorber, or telephone earth. Incomplete earthing may cause electrical shock.
- Install the required fuses or circuit breakers.
- Secure the electrical wiring with cable ties so that the cables do NOT come in contact with sharp edges or piping, particularly on the high-pressure side.
- Do NOT use taped wires, stranded conductor wires, extension cords, or connections from a star system. They can cause overheating, electrical shock or fire.
- Do NOT install a phase advancing capacitor, because this unit is equipped with an inverter. A phase advancing capacitor will reduce performance and may cause accidents.

WARNING

- All wiring MUST be performed by an authorised electrician and MUST comply with the applicable legislation.
- Make electrical connections to the fixed wiring.
- All components procured on-site and all electrical construction MUST comply with the applicable legislation.

WARNING

ALWAYS use multicore cable for power supply cables.

WARNING

The backup heater MUST have a dedicated power supply and MUST be protected by the safety devices required by the applicable legislation.

WARNING

Stripped wire. Make sure that stripped wire cannot make contact with possible water on the bottom plate.

WARNING

If the supply cord is damaged, it MUST be replaced by the manufacturer, its service agent or similarly qualified persons in order to avoid a hazard.

CAUTION

Do NOT push or place redundant cable length in the unit.

CAUTION

To guarantee the unit is completely earthed, ALWAYS connect the backup heater power supply and the earth cable.

INFORMATION

Details of type and rating of fuses, or rating of circuit breakers are described in "9 Electrical installation" [▸ 86].

Configuration (see "11 Configuration" [▸ 137])

WARNING

Be aware that the domestic hot water temperature at the hot water tap will be equal to the value selected in field setting [2-03] after a disinfection operation.

When the high domestic hot water temperature can be a potential risk for human injuries, a mixing valve (field supply) shall be installed at the hot water outlet connection of the domestic hot water tank. This mixing valve shall secure that the hot water temperature at the hot water tap never rise above a set maximum value. This maximum allowable hot water temperature shall be selected according to the applicable legislation.

CAUTION

The disinfection function settings MUST be configured by the installer according to the applicable legislation.

CAUTION

Make sure that the disinfection function start time [5.7.3] with defined duration [5.7.5] is NOT interrupted by possible domestic hot water demand.

Commissioning (see "12 Commissioning" [▸ 211])

WARNING

Commissioning method MUST be in accordance with the instructions from this manual. See "12 Commissioning" [▸ 211].

Maintenance and service (see "14 Maintenance and service" [▸ 223])



DANGER: RISK OF ELECTROCUTION



DANGER: RISK OF BURNING/SCALDING



DANGER: RISK OF BURNING/SCALDING

The water in the tank can be very hot.



WARNING

If the internal wiring is damaged, it has to be replaced by the manufacturer, its service agent or similarly qualified persons.



CAUTION

Water coming out of the valve may be very hot.

Troubleshooting (see "15 Troubleshooting" [▸ 229])



DANGER: RISK OF ELECTROCUTION



DANGER: RISK OF BURNING/SCALDING



WARNING

- When carrying out an inspection on the switch box of the unit, ALWAYS make sure that the unit is disconnected from the mains. Turn off the respective circuit breaker.
- When a safety device was activated, stop the unit and find out why the safety device was activated before resetting it. NEVER shunt safety devices or change their values to a value other than the factory default setting. If you are unable to find the cause of the problem, call your dealer.



WARNING

Prevent hazards due to inadvertent resetting of the thermal cut-out: power to this appliance MUST NOT be supplied through an external switching device, such as a timer, or connected to a circuit that is regularly turned ON and OFF by the utility.



WARNING

Air purging heat emitters or collectors. Before you purge air from heat emitters or collectors, check if 🔔 or ⚠ is displayed on the home screen of the user interface.

- If not, you can purge air immediately.
- If yes, make sure that the room where you want to purge air is sufficiently ventilated. **Reason:** Refrigerant might leak into the water circuit, and subsequently into the room when you purge air from the heat emitters or collectors.

4 About the box

Keep the following in mind:

- At delivery, the unit MUST be checked for damage. Any damage MUST be reported immediately to the claims agent of the carrier.
- Bring the packed unit as close as possible to its final installation position to prevent damage during transport.

In this chapter

4.1 Overview: About the box 21
4.2 Indoor unit 21
4.2.1 To unpack the indoor unit 21
4.2.2 To remove the accessories from the indoor unit 22
4.2.3 To handle the indoor unit 22
4.3 Domestic hot water tank kit 23
4.3.1 To remove the accessories from the domestic hot water tank kit 23
4.4 Checklist for the required DHW accessories 23

4.1 Overview: About the box

This chapter describes what you have to do after the box with the indoor unit is delivered on-site.

Keep the following in mind:

- At delivery, the unit MUST be checked for damage. Any damage MUST be reported immediately to the claims agent of the carrier.
- Bring the packed unit as close as possible to its final installation position to prevent damage during transport.
- Prepare in advance the path along which you want to bring the unit inside.

4.2 Indoor unit

INFORMATION

This unit has been tested and approved according to BS EN12897:2016

4.2.1 To unpack the indoor unit

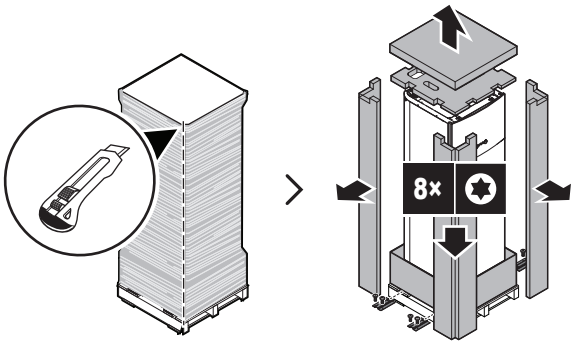

4.2.2 To remove the accessories from the indoor unit

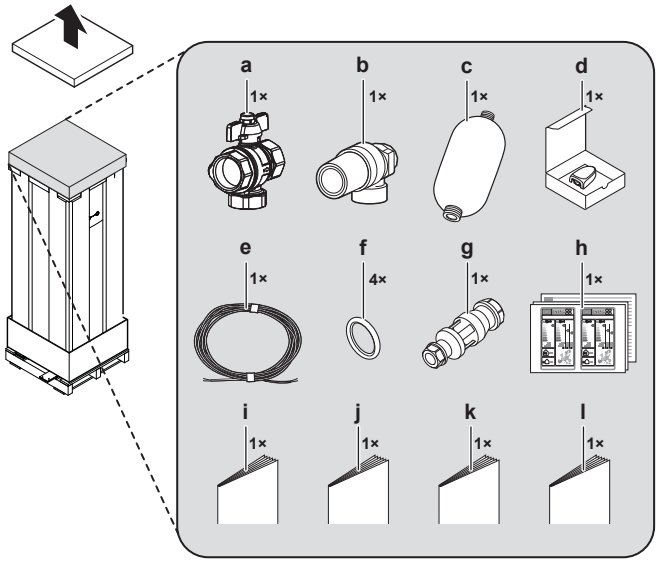

a Shut-off valve with integrated filter
b Safety valve (connection parts for mounting on top of brine level vessel included)
c Brine level vessel
d Remote outdoor sensor (with installation manual)
e Cable for remote outdoor sensor (40 m)
f O-rings (spares for hydro module shut-off valves)
g Tundish
h Energy label
i General safety precautions
j Addendum book for optional equipment
k Installation manual
l Operation manual

4.2.3 To handle the indoor unit

Mind the following guidelines when handling the unit:



- Use a trolley to transport the unit. Make sure to use a trolley with a sufficiently long horizontal ledge, suitable for transportation of heavy appliances.
- When transporting the unit, keep the unit upright.
- Use the handles at the back to carry the unit.

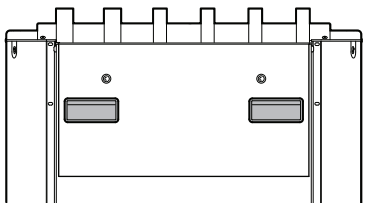

- Remove the hydro module before you carry the unit up or down staircases. See "7.2.3 To remove the hydro module from the unit" [▸ 65].
- It is recommended to use lifting straps to carry the unit up or down staircases.

4.3 Domestic hot water tank kit

4.3.1 To remove the accessories from the domestic hot water tank kit

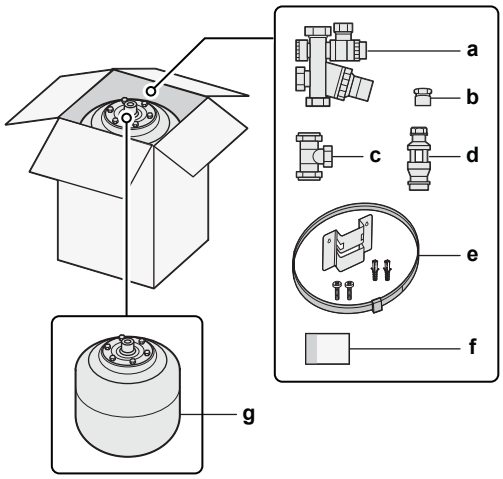

a Pressure reducing valve/pressure relief valve combination. Water inlet and water outlet 22 mm connection, discharge piping connection 15 mm
b Adaptor 22 mm×3/4" Female BSP
c T-piece 22 mm×22 mm×22 mm
d Tundish 15 mm inlet, 22 mm outlet
e Wall mounting set for expansion vessel
f Instruction sheet
g Expansion vessel of 18 l – 3/4" Male BSP

NOTICE

All piping MUST be installed according to section G3 of the Building Regulations.

4.4 Checklist for the required DHW accessories

For installation compliant with section G3 of the Building Regulations, you must verify that the following accessories are present.

Delivered with indoor unit:

☐	Tundish 15 mm inlet, 22 mm outlet

Delivered with domestic hot water tank kit:

☐	Pressure reducing valve/pressure relief valve combination
☐	Adaptor 22 mm×3/4" Female BSP
☐	T-piece 22 mm×22 mm×22 mm
☐	Tundish 15 mm inlet, 22 mm outlet
☐	Wall mounting set for expansion vessel
☐	Instruction sheet
☐	Expansion vessel of 18 l – 3/4" Male BSP

5 About the units and options

In this chapter

5.1 Overview: About the units and options 24
5.2 Identification 24
5.2.1 Identification label: Indoor unit 24
5.3 Components 25
5.4 Possible options for the indoor unit 27

5.1 Overview: About the units and options

This chapter contains information about:

- Identifying the indoor unit
- Components of the indoor unit
- Combining the indoor unit with options

5.2 Identification

NOTICE

When installing or servicing several units at the same time, make sure NOT to switch the service panels between different models.

5.2.1 Identification label: Indoor unit

Location

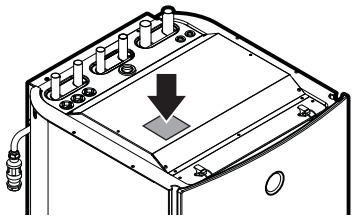

Model identification

Example: E GS A X 10 U DA 9W

Code	Description
E	European model
GS	Ground source heat pump
A	Refrigerant R32
X	H=Heating only X=Heating/cooling
10	Capacity class
U	UK model

Code	Description
DA	Model series
9W	Backup heater model

INFORMATION

Active cooling is available for reversible units only. Passive cooling is only available for heating only models. In this document, active cooling is referred to as “cooling”.

5.3 Components

Top, front and side views

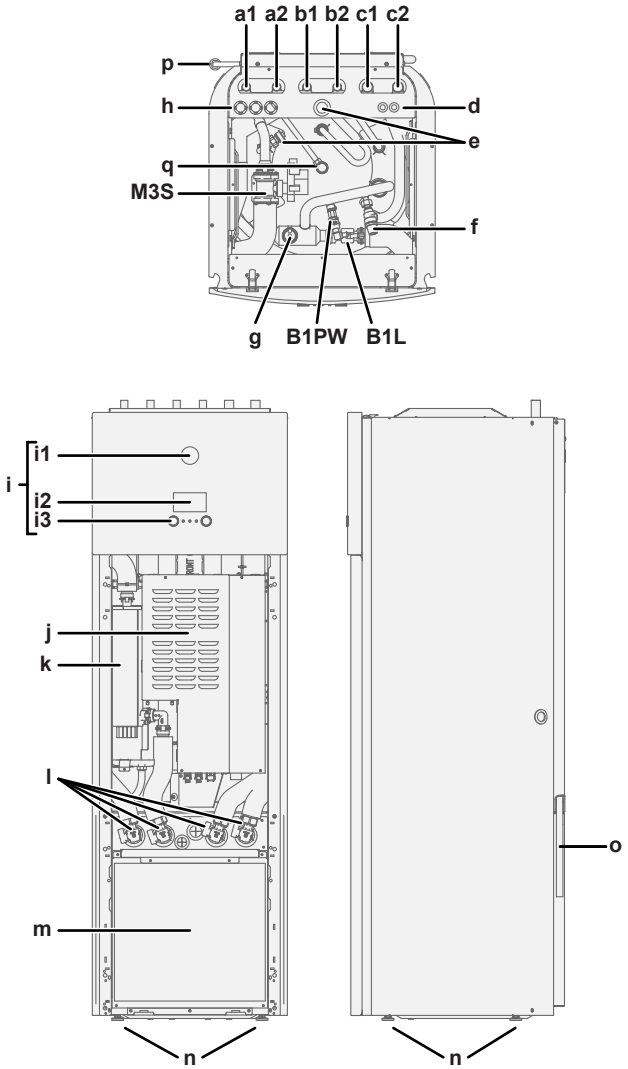

a1	Space heating/cooling water OUT (Ø22 mm)	**i2**	LCD screen
a2	Space heating/cooling water IN (Ø22 mm)	**i3**	Dials and buttons
b1	Domestic hot water: hot water OUT (Ø22 mm)	**j**	Main switch box
b2	Domestic hot water: cold water IN (Ø22 mm)	**k**	Backup heater
c1	Brine OUT (Ø28 mm)	**l**	Shut-off valves
c2	Brine IN (Ø28 mm)	**m**	Hydro module
d	Low voltage wiring intake (Ø13.5 mm)	**n**	Levelling feet

e Recirculation connection (3/4" G female)
f Safety valve (space heating/ cooling water circuit)
g Automatic air purge valve
h High voltage wiring intake (Ø24 mm)
i User interface
i1 Status indicator
o Drain hose (unit + safety valve)
p Tundish (safety relief valve discharge)
q Safety relief valve (DHW tank)
B1L Flow sensor
B1PW Space heating water pressure sensor
M3S 3-way valve (space heating/ domestic hot water)

Hydro module

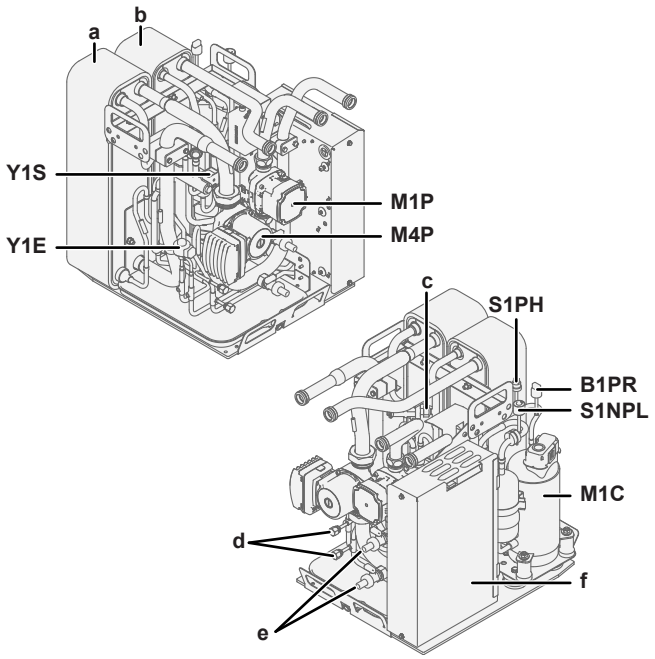

a Plate heat exchanger – Brine side
b Plate heat exchanger – Water side
c Refrigerant pressure relief valve
d Service port (5/16" flare)
e Drain valve
f Inverter switch box (only for service)
B1PR Refrigerant high pressure sensor
M1C Compressor
M1P Water pump
M4P Brine pump
S1NPL Low pressure sensor
S1PH S1PH
Y1E Electronic expansion valve
Y1S Solenoid valve (4-way valve)

Switch boxes

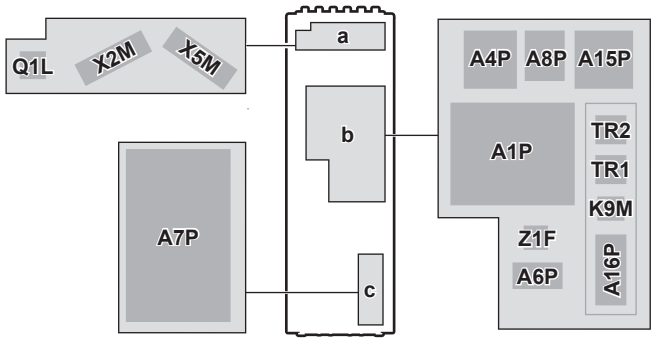

a Installer switch box
b Main switch box
c Inverter switch box (only for service)
A15P LAN adapter
A16P ACS digital I/O PCB
K9M Thermal protector backup heater relay

A1P	Main PCB (hydro)	**Q1L**	Thermal protector backup heater
A4P	Option EKRP1HBAA: Digital I/O PCB	**TR1, TR2**	Power supply transformer
A6P	Backup heater control PCB	**X2M**	Terminal strip – High voltage
A7P	Inverter PCB	**X5M**	Terminal strip – Low voltage
A8P	Option EKRP1AHTA: Demand PCB	**Z1F**	Noise filter

5.4 Possible options for the indoor unit

Digital I/O PCB (EKRP1HBAA)

The digital I/O PCB is required to provide following signals:

- Alarm output
- Space heating On/OFF output
- Changeover to external heat source

For installation instructions, see the installation manual of the digital I/O PCB and addendum book for optional equipment.

Demand PCB (EKRP1AHTA)

To enable the power saving consumption control by digital inputs you MUST install the demand PCB.

For installation instructions, see the installation manual of the demand PCB and addendum book for optional equipment.

User interface used as room thermostat (BRC1HHDA)

- The user interface used as room thermostat can only be used in combination with the user interface connected to the indoor unit.
- The user interface used as room thermostat needs to be installed in the room that you want to control.

For installation instructions, see the installation and operation manual of the user interface used as room thermostat.

Remote indoor sensor (KRCS01-1)

By default the internal sensor of the dedicated Human Comfort Interface (BRC1HHDA used as room thermostat) will be used as room temperature sensor.

As an option the remote indoor sensor can be installed to measure the room temperature on another location.

For installation instructions, see the installation manual of the remote indoor sensor and addendum book for optional equipment.

INFORMATION

- The remote indoor sensor can only be used in case the user interface is configured with room thermostat functionality.
- You can only connect either the remote indoor sensor or the remote outdoor sensor.

PC cable (EKPCCAB4)

The PC cable makes a connection between the switch box of the indoor unit and a PC. It gives the possibility to update the software of the indoor unit.

For installation instructions, see:

- the installation manual of the PC cable
- "11.1.2 To connect the PC cable to the switch box" [▸ 140]

Heat pump convector (FWX*)

For providing space heating/cooling, it is possible to use heat pump convectors (FWXV).

For providing space heating/cooling, it is possible to use the following heat pump convectors:

- FWXV: floor-standing model
- FWXT: wall-mounted model
- FWXM: concealed model

For installation instructions, see:

- The installation manual of the heat pump convector
- The installation manual of the heat pump convector options
- The addendum book for optional equipment

Room thermostat (EKRTWA, EKRTR1, EKRTRB)

You can connect an optional room thermostat to the indoor unit. This thermostat can either be wired (EKRTWA) or wireless (EKRTR1, EKRTRB).

For installation instructions, see the installation manual of the room thermostat and addendum book for optional equipment.

Remote sensor for wireless thermostat (EKRTETS)

You can use the remote indoor temperature sensor (EKRTETS) only in combination with the wireless thermostat (EKRTR1 or EKRTRB).

For installation instructions, see the installation manual of the room thermostat and the addendum book for optional equipment.

Brine filling kit (KGSFILL2)

Brine filling valve kit for flushing, filling, and draining the brine circuit.

Current sensor (EKCSENS)

Current sensor for power limitation. For installation instructions, see the installation manual of the current sensor.

Hydro module (EKGSHYDMOD)

Hydro module replacement.

For installation instructions, see the installation manual of the hydro module.

Power cable with connector for Germany (EKGSPOWCAB)

Power cable for split power supply layout, needed for installations in Germany.

For installation instructions, see the installation manual of the power cable.

Multi-zoning base unit and wired thermostats (EKWUFHTA1V3, EKWCTRDI1V3, EKWCTRAN1V3)

Multi-zoning base unit (EKWUFHTA1V3) and thermostats for multi zone control of underfloor heating and radiators. Both digital (EKWCTRDI1V3) and analog (EKWCTRAN1V3) wired thermostat options are available.

For more information, see the installation manual of the multi-zoning base unit and the applicable thermostat.

6 Application guidelines

In this chapter

6.1 Overview: Application guidelines 29
6.2 Setting up the space heating/cooling system 30
6.2.1 Single room 30
6.2.2 Multiple rooms – One LWT zone 35
6.2.3 Multiple rooms – Two LWT zones 39
6.3 Setting up an auxiliary heat source for space heating 42
6.4 Setting up the domestic hot water tank 45
6.4.1 System layout – Integrated DHW tank 45
6.4.2 Selecting the volume and desired temperature for the DHW tank 45
6.4.3 Setup and configuration – DHW tank 46
6.4.4 DHW pump for instant hot water 47
6.4.5 DHW pump for disinfection 47
6.5 Setting up the energy metering 48
6.5.1 Produced heat 48
6.5.2 Consumed energy 48
6.6 Setting up the power consumption control 51
6.6.1 Permanent power limitation 52
6.6.2 Power limitation activated by digital inputs 53
6.6.3 Power limitation process 54
6.6.4 Current limitation by current sensors 55
6.6.5 BBR16 power limitation 55
6.7 Setting up an external temperature sensor 56
6.8 Setting up passive cooling 57
6.9 Setting up the brine low pressure switch 58

6.1 Overview: Application guidelines

The purpose of the application guidelines is to give a glance of the possibilities of the heat pump system.

NOTICE

- The illustrations in the application guidelines are meant for reference only, and are NOT to be used as detailed hydraulic diagrams. The detailed hydraulic dimensioning and balancing are NOT shown, and are the responsibility of the installer.
- For more information about the configuration settings to optimize heat pump operation, see "11 Configuration" [▸ 137].

This chapter contains application guidelines for:

- Setting up the space heating/cooling system
- Setting up an auxiliary heat source for space heating
- Setting up the domestic hot water tank
- Setting up the energy metering
- Setting up the power consumption control
- Setting up an external temperature sensor
- Setting up passive cooling
- Setting up the brine low pressure switch

6.2 Setting up the space heating/cooling system

The heat pump system supplies leaving water to heat emitters in one or more rooms.

Because the system offers a wide flexibility to control the temperature in each room, you need to answer the following questions first:

- How many rooms are heated or cooled by the heat pump system?
- Which heat emitter types are used in each room and what is their design leaving water temperature?

Once the space heating/cooling requirements are clear, we recommend to follow the setup guidelines below.

NOTICE

If an external room thermostat is used, the external room thermostat will control the room frost protection. However, the room frost protection is only possible if [C.2] `Space heating/cooling=On`.

INFORMATION

In case an external room thermostat is used and room frost protection needs to be guaranteed in all conditions, then you have to set `Emergency` [9.5.1] to `Automatic`.

NOTICE

An overpressure bypass valve can be integrated in the system. Keep in mind that this valve might not be shown on the illustrations.

6.2.1 Single room

Underfloor heating or radiators – Wired room thermostat

Setup

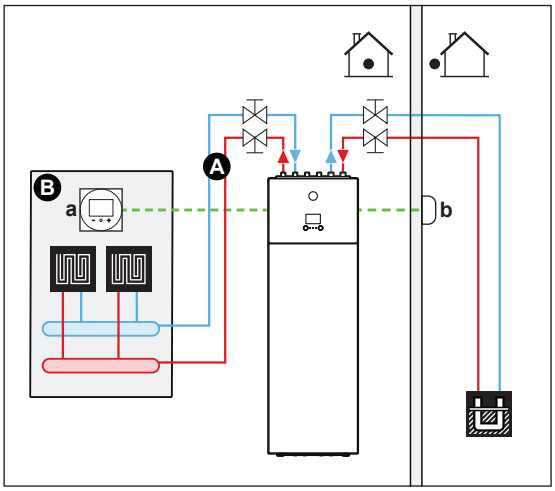

A Main leaving water temperature zone
B One single room
a Dedicated Human Comfort Interface (BRC1HHDA used as room thermostat)
b Remote outdoor sensor

- For more information about connecting the electrical wiring to the unit, see "9.2 Overview of electrical connections for external and internal actuators" [▸ 89].

- The underfloor heating or radiators are directly connected to the indoor unit.
- The room temperature is controlled by the dedicated Human Comfort Interface (BRC1HHDA used as room thermostat).

Configuration

Setting	Value
Unit temperature control: ▪ #: [2.9] ▪ Code: [C-07]	2 (`Room thermostat`): Unit operation is decided based on the ambient temperature of the dedicated Human Comfort Interface.
Number of water temperature zones: ▪ #: [4.4] ▪ Code: [7-02]	0 (`Single zone`): Main

Benefits

- **Highest comfort and efficiency**. The smart room thermostat functionality can decrease or increase the desired leaving water temperature based on the actual room temperature (modulation). This results in:
  - Stable room temperature matching the desired temperature (higher comfort)
  - Less ON/OFF cycles (more quiet, higher comfort and higher efficiency)
  - Lowest possible leaving water temperature (higher efficiency)
- **Easy**. You can easily set the desired room temperature via the user interface:
  - For your daily needs, you can use preset values and schedules.
  - To deviate from your daily needs, you can temporarily overrule the preset values and schedules, or use the holiday mode.

Underfloor heating or radiators – Wireless room thermostat

Setup

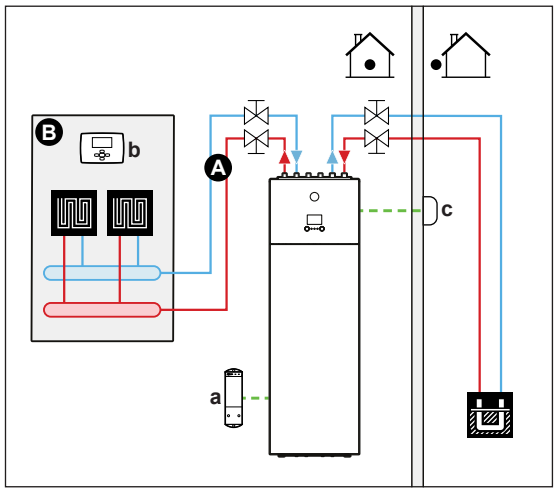

A Main leaving water temperature zone
B One single room
a Receiver for wireless external room thermostat
b Wireless external room thermostat
c Remote outdoor sensor

- For more information about connecting the electrical wiring to the unit, see "9.2 Overview of electrical connections for external and internal actuators" [▸ 89].

- The underfloor heating or radiators are directly connected to the indoor unit.
- The room temperature is controlled by the wireless external room thermostat (optional equipment EKRTR1 or EKRTRB).

Configuration

Setting	Value
Unit temperature control: ▪ #: [2.9] ▪ Code: [C-07]	1 (`External room thermostat`): Unit operation is decided by the external thermostat.
Number of water temperature zones: ▪ #: [4.4] ▪ Code: [7-02]	0 (`Single zone`): Main
External room thermostat for the **main** zone: ▪ #: [2.A] ▪ Code: [C-05]	1 (`1 contact`): When the used external room thermostat or heat pump convector can only send a thermo ON/OFF condition. No separation between heating or cooling demand.

Benefits

- **Wireless.** The Daikin external room thermostat is available in a wireless version.
- **Efficiency.** Although the external room thermostat only sends ON/OFF signals, it is specifically designed for the heat pump system.
- **Comfort.** In case of underfloor heating, the wireless external room thermostat prevents condensation on the floor during cooling operation by measuring the room humidity.

Heat pump convectors

Setup

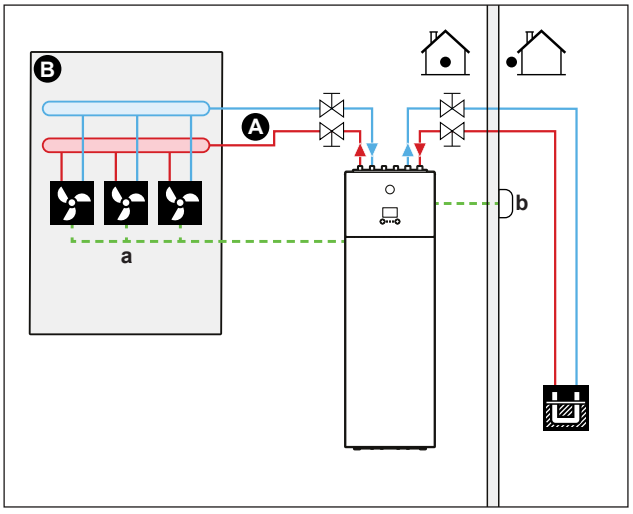

A Main leaving water temperature zone
B One single room
a Heat pump convectors + controllers
b Remote outdoor sensor

- For more information about connecting the electrical wiring to the unit, see "9.2 Overview of electrical connections for external and internal actuators" [▸ 89].
- The heat pump convectors are directly connected to the indoor unit.

- The desired room temperature is set via the controller of the heat pump convectors. There are different controllers and setups possible for the heat pump convectors. For more information, see:
  - The installation manual of the heat pump convectors
  - The installation manual of the heat pump convector options
  - The addendum book for optional equipment
- The space heating/cooling demand signal is sent to one digital input on the indoor unit (X2M/35 and X2M/30).
- The space operation mode is sent to the heat pump convectors by one digital output on the indoor unit (X2M/4 and X2M/3).

INFORMATION

When using multiple heat pump convectors, make sure each one receives the infrared signal from the remote controller of the heat pump convectors.

Configuration

Setting	Value
Unit temperature control: ▪ #: [2.9] ▪ Code: [C-07]	1 (`External room thermostat`): Unit operation is decided by the external thermostat.
Number of water temperature zones: ▪ #: [4.4] ▪ Code: [7-02]	0 (`Single zone`): Main
External room thermostat for the **main** zone: ▪ #: [2.A] ▪ Code: [C-05]	1 (`1 contact`): When the used external room thermostat or heat pump convector can only send a thermo ON/OFF condition. No separation between heating or cooling demand.

Benefits

- **Cooling.** The heat pump convector offers, besides heating capacity, also excellent cooling capacity.
- **Efficiency.** Optimal energy efficiency because of the interlink function.
- **Stylish.**

Combination: Underfloor heating + Heat pump convectors

- Space heating is provided by:
  - The underfloor heating
  - The heat pump convectors
- Space cooling is provided by the heat pump convectors only. The underfloor heating is shut off by the shut-off valve.

Setup

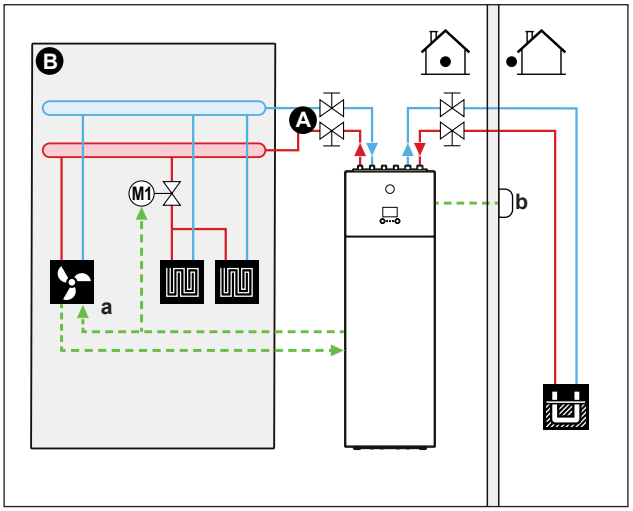

A Main leaving water temperature zone
B One single room
a Heat pump convector + controller
b Remote outdoor sensor

- For more information about connecting the electrical wiring to the unit, see "9.2 Overview of electrical connections for external and internal actuators" [▸ 89].
- The heat pump convectors are directly connected to the indoor unit.
- A shut-off valve (field supply) is installed before the underfloor heating to prevent condensation on the floor during cooling operation.
- The desired room temperature is set via the controller of the heat pump convectors. There are different controllers and setups possible for the heat pump convectors. For more information, see:
  - The installation manual of the heat pump convectors
  - The installation manual of the heat pump convector options
  - The addendum book for optional equipment
- The space heating/cooling demand signal is sent to one digital input on the indoor unit (X2M/35 and X2M/30).
- The space operation mode is sent by one digital output (X2M/4 and X2M/3) on the indoor unit to:
  - The heat pump convectors
  - The shut-off valve

Configuration

Setting	Value
Unit temperature control: ▪ #: [2.9] ▪ Code: [C-07]	1 (`External room thermostat`): Unit operation is decided by the external thermostat.
Number of water temperature zones: ▪ #: [4.4] ▪ Code: [7-02]	0 (`Single zone`): Main

Setting	Value
External room thermostat for the **main** zone: ▪ #: [2.A] ▪ Code: [C-05]	1 (`1 contact`): When the used external room thermostat or heat pump convector can only send a thermo ON/OFF condition. No separation between heating or cooling demand.

Benefits

- **Cooling.** Heat pump convectors provide, besides heating capacity, also excellent cooling capacity.
- **Efficiency**. Underfloor heating has the best performance with the heat pump system.
- **Comfort.** The combination of the two heat emitter types provides:
  - The excellent heating comfort of the underfloor heating
  - The excellent cooling comfort of the heat pump convectors

6.2.2 Multiple rooms – One LWT zone

If only one leaving water temperature zone is needed because the design leaving water temperature of all heat emitters is the same, you do NOT need a mixing valve station (cost effective).

Example: If the heat pump system is used to heat up one floor where all the rooms have the same heat emitters.

Underfloor heating or radiators – Thermostatic valves

If you are heating up rooms with underfloor heating or radiators, a very common way is to control the temperature of the main room by using a thermostat (this can either be the dedicated Human Comfort Interface (BRC1HHDA) or an external room thermostat), while the other rooms are controlled by so-called thermostatic valves, which open or close depending on the room temperature.

Setup

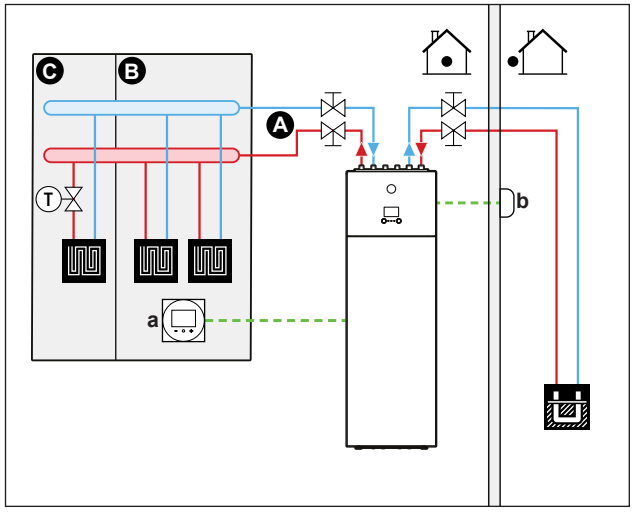

A Main leaving water temperature zone
B Room 1
C Room 2
a Dedicated Human Comfort Interface (BRC1HHDA used as room thermostat)
b Remote outdoor sensor

- For more information about connecting the electrical wiring to the unit, see "9.2 Overview of electrical connections for external and internal actuators" [▸ 89].
- The underfloor heating of the main room is directly connected to the indoor unit.
- The room temperature of the main room is controlled by the dedicated Human Comfort Interface (BRC1HHDA used as room thermostat).
- A thermostatic valve is installed before the underfloor heating in each of the other rooms.

> **INFORMATION**
>
> Mind situations where the main room can be heated by another heating source. Example: Fireplaces.

Configuration

Setting	Value
Unit temperature control: ▪ #: [2.9] ▪ Code: [C-07]	2 (`Room thermostat`): Unit operation is decided based on the ambient temperature of the dedicated Human Comfort Interface.
Number of water temperature zones: ▪ #: [4.4] ▪ Code: [7-02]	0 (`Single zone`): Main

Benefits

- **Easy**. Same installation as for one room, but with thermostatic valves.

Underfloor heating or radiators – Multiple external room thermostats

Setup

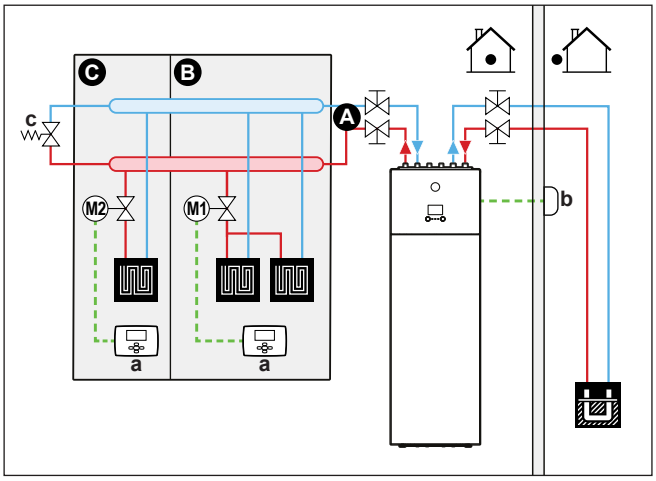

A Main leaving water temperature zone
B Room 1
C Room 2
a External room thermostat
b Remote outdoor sensor
c Bypass valve

- For more information about connecting the electrical wiring to the unit, see "9.2 Overview of electrical connections for external and internal actuators" [▸ 89].

- For each room, a shut-off valve (field supplied) is installed to avoid leaving water supply when there is no heating or cooling demand.
- A bypass valve must be installed to make water recirculation possible when all shut-off valves are closed.
- The user interface integrated in the indoor unit decides the space operation mode. Mind that the operation mode on each room thermostat must be set to match the indoor unit.
- The room thermostats are connected to the shut-off valves, but do NOT have to be connected to the indoor unit. The indoor unit will supply leaving water all the time, with the possibility to program a leaving water schedule.

Configuration

Setting	Value
Unit temperature control: ▪ #: [2.9] ▪ Code: [C-07]	0 (`Leaving water`): Unit operation is decided based on the leaving water temperature.
Number of water temperature zones: ▪ #: [4.4] ▪ Code: [7-02]	0 (`Single zone`): Main

Benefits

Compared with underfloor heating or radiators for one room:

- **Comfort.** You can set the desired room temperature, including schedules, for each room via the room thermostats.

Heat pump convectors – Multiple rooms

Setup

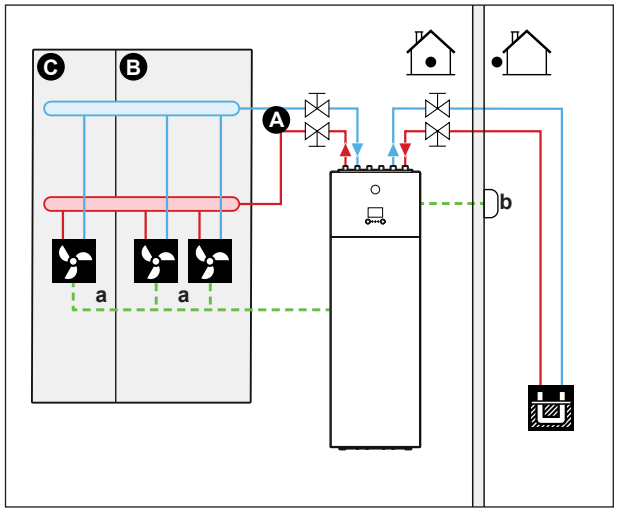

A Main leaving water temperature zone
B Room 1
C Room 2
a Heat pump convectors + controllers
b Remote outdoor sensor

- For more information about connecting the electrical wiring to the unit, see "9.2 Overview of electrical connections for external and internal actuators" [▸ 89].

- The desired room temperature is set via the controller of the heat pump convectors. There are different controllers and setups possible for the heat pump convectors. For more information, see:
  - The installation manual of the heat pump convectors
  - The installation manual of the heat pump convector options
  - The addendum book for optional equipment
- The user interface integrated in the indoor unit decides the space operation mode.
- The heating or cooling demand signals of each heat pump convector are connected in parallel to the digital input on the indoor unit (X2M/35 and X2M/30). The indoor unit will only supply leaving water temperature when there is an actual demand.

INFORMATION

To increase comfort and performance, we recommend to install the valve kit option EKVKHPC on each heat pump convector.

Configuration

Setting	Value
Unit temperature control: ▪ #: [2.9] ▪ Code: [C-07]	1 (`External room thermostat`): Unit operation is decided by the external thermostat.
Number of water temperature zones: ▪ #: [4.4] ▪ Code: [7-02]	0 (`Single zone`): Main

Benefits

Compared with heat pump convectors for one room:

- **Comfort.** You can set the desired room temperature, including schedules, for each room via the remote controller of the heat pump convectors.

Combination: Underfloor heating + Heat pump convectors – Multiple rooms

Setup

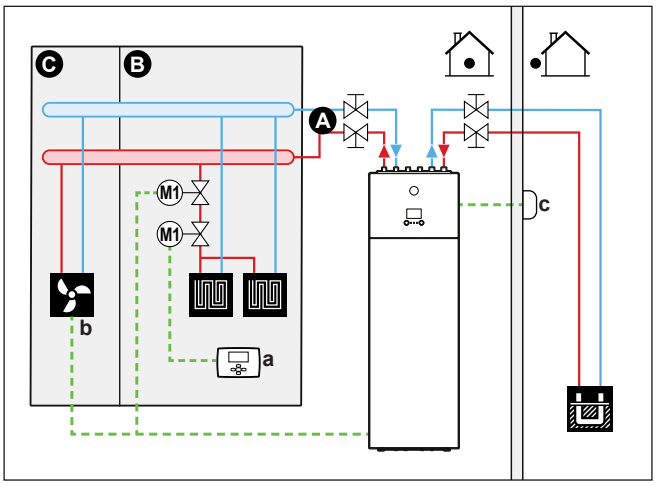

A Main leaving water temperature zone
B Room 1
C Room 2

a External room thermostat
b Heat pump convector + controller
c Remote outdoor sensor

- For more information about connecting the electrical wiring to the unit, see "9.2 Overview of electrical connections for external and internal actuators" [▸ 89].
- For each room with heat pump convectors: The heat pump convectors are directly connected to the indoor unit.
- For each room with underfloor heating: Two shut-off valves (field supply) are installed before the underfloor heating:
  - A shut-off valve to prevent hot water supply when the room has no heating demand
  - A shut-off valve to prevent condensation on the floor during cooling operation of the rooms with heat pump convectors.
- For each room with heat pump convectors: The desired room temperature is set via the controller of the heat pump convectors. There are different controllers and setups possible for the heat pump convectors. For more information, see:
  - The installation manual of the heat pump convectors
  - The installation manual of the heat pump convector options
  - The addendum book for optional equipment
- For each room with underfloor heating: The desired room temperature is set via the external room thermostat (wired or wireless).
- The user interface integrated in the indoor unit decides the space operation mode. Mind that the operation mode on each external room thermostat and remote controller of the heat pump convectors must be set to match the indoor unit.

INFORMATION

To increase comfort and performance, we recommend to install the valve kit option EKVKHPC on each heat pump convector.

Configuration

Setting	Value
Unit temperature control: ▪ #: [2.9] ▪ Code: [C-07]	0 (`Leaving water`): Unit operation is decided based on the leaving water temperature.
Number of water temperature zones: ▪ #: [4.4] ▪ Code: [7-02]	0 (`Single zone`): Main

6.2.3 Multiple rooms – Two LWT zones

If the heat emitters selected for each room are designed for different leaving water temperatures, you can use different leaving water temperature zones (maximum 2).

In this document:

- Main zone = Zone with the lowest design temperature in heating, and the highest design temperature in cooling

- Additional zone = Zone with the highest design temperature in heating, and the lowest design temperature in cooling

CAUTION

If there is more than one leaving water zone, ALWAYS install a mixing valve station in the main zone to decrease (in heating) the leaving water temperature when the additional zone has demand.

Typical example:

Room (zone)	Heat emitters: Design temperature
Living room (main zone)	Underfloor heating: ▪ In heating: 35°C ▪ In cooling: 20°C (only refreshment, no real cooling allowed)
Bed rooms (additional zone)	Heat pump convectors: ▪ In heating: 45°C ▪ In cooling: 12°C

Setup

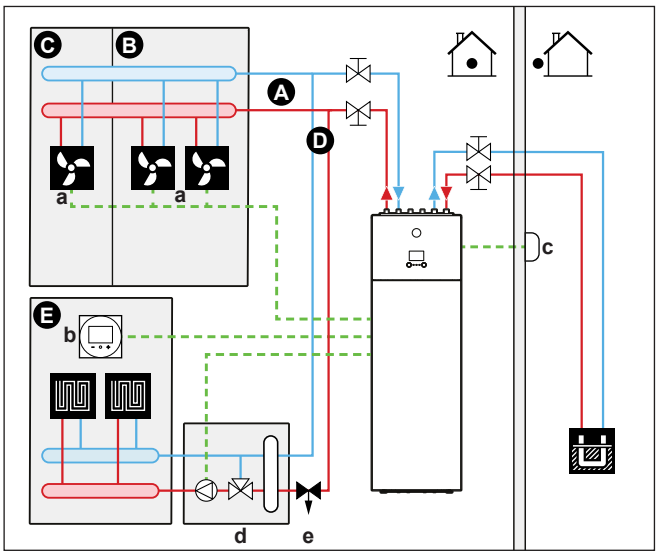

A Additional leaving water temperature zone
B Room 1
C Room 2
D Main leaving water temperature zone
E Room 3
a Heat pump convectors + controllers
b Dedicated Human Comfort Interface (BRC1HHDA used as room thermostat)
c Remote outdoor sensor
d Mixing valve station
e Pressure regulating valve

INFORMATION

A pressure regulating valve should be implemented before the mixing valve station. This is to guarantee the correct water flow balance between the main leaving water temperature zone and the additional leaving water temperature zone in relation to the required capacity of both water temperature zones.

- For more information about connecting the electrical wiring to the unit, see "9.2 Overview of electrical connections for external and internal actuators" [▸ 89].

- For the main zone:
  - A mixing valve station is installed before the underfloor heating.
  - The pump of the mixing valve station is controlled by the ON/OFF signal on the indoor unit (X2M/29 and X2M/21; normally closed shut-off valve output).
  - The room temperature is controlled by the dedicated Human Comfort Interface (BRC1HHDA used as room thermostat).
- For the additional zone:
  - The heat pump convectors are directly connected to the indoor unit.
  - The desired room temperature is set via the remote controller of the heat pump convectors for each room.
  - The heating or cooling demand signals of each heat pump convector are connected in parallel to the digital input on the indoor unit (X2M/35a and X2M/30). The indoor unit will only supply the desired additional leaving water temperature when there is an actual demand.
- The user interface integrated in the indoor unit decides the space operation mode. Mind that the operation mode on each remote controller of the heat pump convectors must be set to match the indoor unit.

Configuration

Setting	Value
Unit temperature control: ▪ #: [2.9] ▪ Code: [C-07]	2 (`Room thermostat`): Unit operation is decided based on the ambient temperature of the dedicated Human Comfort Interface. **Note:** ▪ Main room = dedicated Human Comfort Interface used as room thermostat functionality ▪ Other rooms = external room thermostat functionality
Number of water temperature zones: ▪ #: [4.4] ▪ Code: [7-02]	1 (`Dual zone`): Main + additional
In case of heat pump convectors: External room thermostat for the **additional** zone: ▪ #: [3.A] ▪ Code: [C-06]	1 (`1 contact`): When the used external room thermostat or heat pump convector can only send a thermo ON/OFF condition. No separation between heating or cooling demand.
Shut-off valve output	Set to follow the thermo demand of the main zone.
Shut-off valve	If the main zone must be shut off during cooling mode to prevent condensation on the floor, set it accordingly.
At the mixing valve station	Set the desired main leaving water temperature for heating and/or cooling.

Benefits

- **Comfort.**
  - The smart room thermostat functionality can decrease or increase the desired leaving water temperature based on the actual room temperature (modulation).
  - The combination of the two heat emitter systems provides the excellent heating comfort of the underfloor heating, and the excellent cooling comfort of the heat pump convectors.
- **Efficiency.**
  - Depending on the demand, the indoor unit supplies different leaving water temperature matching the design temperature of the different heat emitters.
  - Underfloor heating has the best performance with the heat pump system.

6.3 Setting up an auxiliary heat source for space heating

INFORMATION

Bivalent is only possible in case of 1 leaving water temperature zone with:

- room thermostat control, OR
- external room thermostat control.

- Space heating can be done by:
  - The indoor unit
  - An auxiliary boiler (field supply) connected to the system
- When there is a heating request, the indoor unit or the auxiliary boiler starts operating. Which of these units operates, depends on the outdoor temperature (status of the changeover to external heat source). When the permission is given to the auxiliary boiler, the space heating by the indoor unit is turned OFF.
- Bivalent operation is only possible if:
  - Space heating is turned ON, and
  - DHW tank operation is turned OFF
- Domestic hot water is always produced by the DHW tank connected to the indoor unit.

INFORMATION

- During heating operation of the heat pump, the heat pump operates to achieve the desired temperature set via the user interface. When weather-dependent operation is active, the water temperature is determined automatically depending on the outdoor temperature.
- During heating operation of the auxiliary boiler, the auxiliary boiler operates to achieve the desired water temperature set via the auxiliary boiler controller.

Setup

- Integrate the auxiliary boiler as follows:

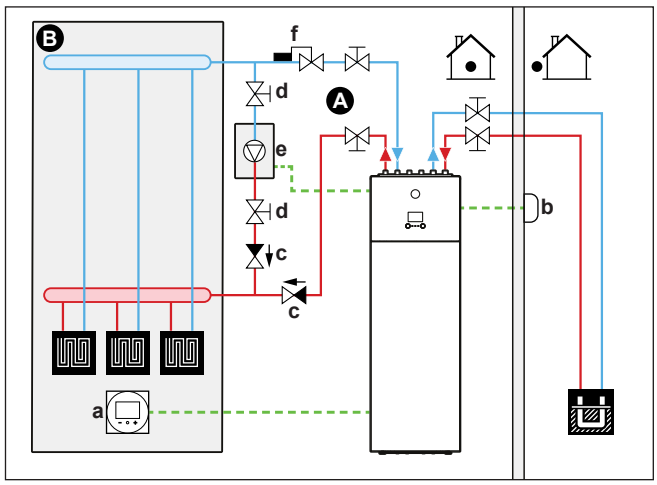

A Main leaving water temperature zone
B One single room
a Dedicated Human Comfort Interface (BRC1HHDA used as room thermostat)
b Remote outdoor sensor
c Non-return valve (field supply)
d Shut-off valve (field supply)
e Auxiliary boiler (field supply)
f Aquastat valve (field supply)

NOTICE

- Make sure the auxiliary boiler and its integration in the system complies with applicable legislation.
- Daikin is NOT responsible for incorrect or unsafe situations in the auxiliary boiler system.

- Make sure the return water to the heat pump does NOT exceed 55°C. To do so:
  - Set the desired water temperature via the auxiliary boiler controller to maximum 55°C.
  - Install an aquastat valve in the return water flow of the heat pump. Set the aquastat valve to close above 55°C and to open below 55°C.
- Install non-return valves.
- The indoor unit does NOT contain an expansion vessel, so you have to install an expansion vessel in the water circuit of the indoor unit yourself. But for bivalent operation, also make sure that there is an expansion vessel in the auxiliary boiler loop. Otherwise when bivalent operation is running and if the Aquastat valve would close, there would be no expansion vessel in the water circuit anymore.
- Install the digital I/O PCB (option EKRP1HBAA).
- Connect X1 and X2 (changeover to external heat source) on the digital I/O PCB to the auxiliary boiler. See "9.2.8 To connect the changeover to external heat source" [▸ 103].
- To setup the heat emitters, see "6.2 Setting up the space heating/cooling system" [▸ 30].

Configuration

Via the user interface (configuration wizard):

- Set the use of a bivalent system as external heat source.
- Set the bivalent temperature and hysteresis.
- Set the operation mode to space heating only (no tank operation).

Changeover to external heat source decided by an auxiliary contact

- Only possible in external room thermostat control AND one leaving water temperature zone (see "6.2 Setting up the space heating/cooling system" [▸ 30]).
- The auxiliary contact can be:
  - An outdoor temperature thermostat
  - An electricity tariff contact
  - A manually operated contact
  - ...
- Setup: Connect the following field wiring:

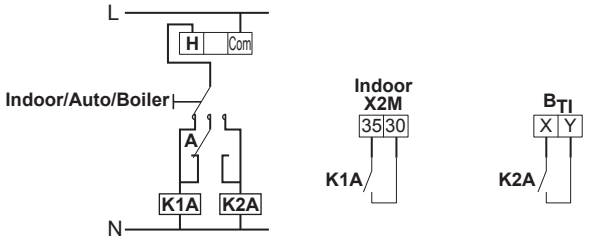

B_{TI}	Boiler thermostat input
A	Auxiliary contact (normally closed)
H	Heating demand room thermostat (optional)
K1A	Auxiliary relay for activation of indoor unit (field supply)
K2A	Auxiliary relay for activation of boiler (field supply)
Indoor	Indoor unit
Auto	Automatic
Boiler	Boiler

NOTICE

- Make sure the auxiliary contact has enough differential or time delay to prevent frequent changeover between indoor unit and auxiliary boiler.
- If the auxiliary contact is an outdoor temperature thermostat, install the thermostat in the shadow so that it is NOT influenced or turned ON/OFF by direct sunlight.
- Frequent changeover may cause corrosion of the auxiliary boiler. Contact the manufacturer of the auxiliary boiler for more information.

6.4 Setting up the domestic hot water tank

6.4.1 System layout – Integrated DHW tank

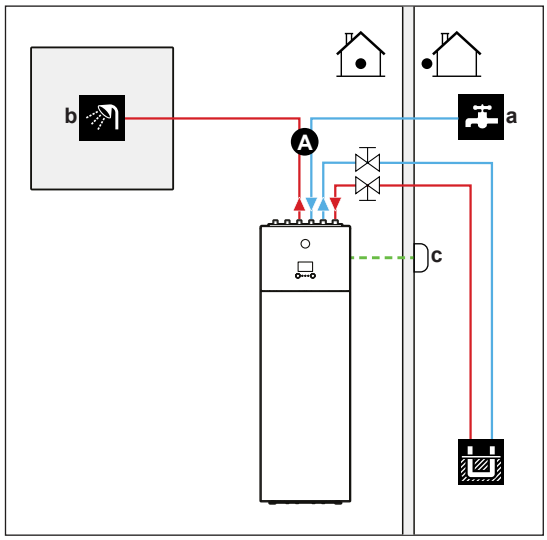

A Domestic hot water
a Cold water IN
b Hot water OUT
c Remote outdoor sensor

6.4.2 Selecting the volume and desired temperature for the DHW tank

People experience water as hot when its temperature is 40°C. Therefore, the DHW consumption is always expressed as equivalent hot water volume at 40°C. However, you can set the DHW tank temperature at a higher temperature (example: 53°C), which is then mixed with cold water (example: 15°C).

Selecting the desired temperature for the DHW tank consists of:

1 Determining the DHW consumption (equivalent hot water volume at 40°C).
2 Determining the desired temperature for the DHW tank.

Determining the DHW consumption

Answer the following questions and calculate the DHW consumption (equivalent hot water volume at 40°C) using typical water volumes:

Question	Typical water volume
How many showers are needed per day?	1 shower = 10 min×10 l/min = 100 l
How many baths are needed per day?	1 bath = 150 l
How much water is needed at the kitchen sink per day?	1 sink = 2 min×5 l/min = 10 l
Are there any other domestic hot water needs?	—

Example: If the DHW consumption of a family (4 persons) per day is as follows:

- 3 showers
- 1 bath
- 3 sink volumes

Then the DHW consumption = (3×100 l)+(1×150 l)+(3×10 l)=480 l

Determining the desired temperature for the DHW tank

Formula	Example
$V_1=V_2+V_2\times(T_2-40)/(40-T_1)$	If: ▪ V_2=180 l ▪ T_2=54°C ▪ T_1=15°C Then V_1=280 l

V_1 DHW consumption (equivalent hot water volume at 40°C)
V_2 Required DHW tank volume if only heated once
T_2 DHW tank temperature
T_1 Cold water temperature

DHW tank volume

Integrated DHW tank volume: 180 l (=V_2)

INFORMATION

DHW tank volume. You cannot select the volume of the DHW tank because only one size is available.

Energy saving tips

- If the DHW consumption differs from day to day, you can program a weekly schedule with different desired DHW tank temperatures for each day.
- The lower the desired DHW tank temperature, the more cost effective.
- The heat pump itself can produce domestic hot water of maximum 55°C. The electrical resistance (backup heater) integrated in the heat pump can increase this temperature. However, this consumes more energy. We recommend to set the desired DHW tank temperature below 55°C to avoid using the electrical resistance.
- When the heat pump produces domestic hot water, depending on total heating demand and the scheduled priority setting, it might not be able to heat up a space. In case you need domestic hot water and space heating at the same time, we recommend to produce the domestic hot water during the night when there is lower space heating demand or during the time when occupants are not present.

6.4.3 Setup and configuration – DHW tank

- For large DHW consumptions, you can heat up the DHW tank several times during the day.
- To heat up the DHW tank to the desired DHW tank temperature, you can use the following energy sources:
  - Thermodynamic cycle of the heat pump
  - Electrical backup heater
- For more information about optimizing the energy consumption for producing domestic hot water, see "11 Configuration" [▸ 137].

6.4.4 DHW pump for instant hot water

Setup

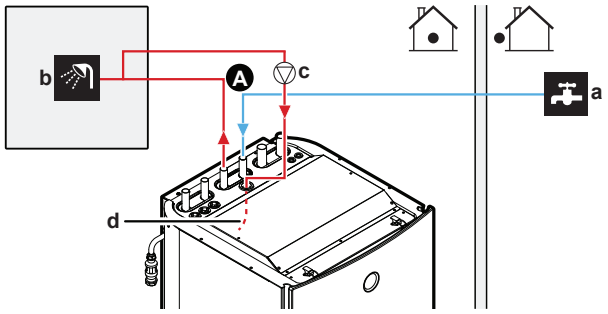

A Domestic hot water
a Cold water IN
b Domestic hot water OUT (shower (field supply))
c DHW pump (field supply)
d Recirculation connection

- By connecting a DHW pump, instant hot water can be available at the tap.
- The DHW pump and the installation are field supply and the responsibility of the installer. For the electrical wiring, see "9.2.5 To connect the domestic hot water pump" [▸ 99].

Configuration

- For more information, see "11 Configuration" [▸ 137].
- You can program a schedule to control the DHW pump via the user interface. For more information, see the user reference guide.

6.4.5 DHW pump for disinfection

Setup

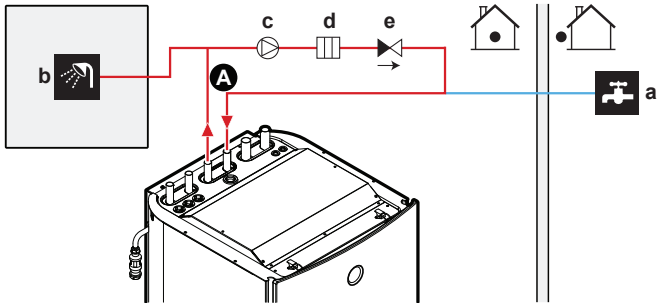

A Domestic hot water
a Cold water IN
b Domestic hot water OUT (shower (field supply))
c DHW pump (field supply)
d Heater element (field supply)
e Non-return valve (field supply)

- The DHW pump is field-supplied and its installation is the responsibility of the installer. For the electrical wiring, see "9.2.5 To connect the domestic hot water pump" [▸ 99].
- If the applicable legislation requires a higher temperature than the maximum tank setpoint during disinfection (see [2-03] in the field settings table), you can connect a DHW pump and heater element as shown above.
- If applicable legislation requires disinfection of the water piping until the tapping point, you can connect a DHW pump and heater element (if needed) as shown above.

Configuration

The indoor unit can control DHW pump operation. For more information, see "11 Configuration" [▶ 137].

6.5 Setting up the energy metering

- Via the user interface, you can read out the following energy data:
  - Produced heat
  - Consumed energy
- You can read out the energy data:
  - For space heating
  - For space cooling
  - For domestic hot water production
- You can read out the energy data:
  - Per month
  - Per year

INFORMATION

The calculated produced heat and consumed energy are an estimation, the accuracy cannot be guaranteed.

6.5.1 Produced heat

INFORMATION

The sensors used to calculate the produced heat are calibrated automatically.

- The produced heat is calculated internally based on:
  - The leaving and entering water temperature
  - The flow rate
- Setup and configuration: No additional equipment needed.

6.5.2 Consumed energy

You can use the following methods to determine the consumed energy:

- Calculating
- Measuring

INFORMATION

You cannot combine calculating the consumed energy (example: for the backup heater) and measuring the consumed energy (example: for the rest of the unit). If you do so, the energy data will be invalid.

Calculating the consumed energy

- The consumed energy is calculated internally based on:
  - The actual power input of the indoor unit
  - The set capacity of the backup heater
  - The voltage
- Setup and configuration: None.

Measuring the consumed energy

- Preferred method because of higher accuracy.
- Requires external power meters.
- Setup and configuration: When using electrical power meters, set the number of pulses/kWh for each power meter via the user interface.

> **INFORMATION**
>
> When measuring the electrical power consumption, make sure ALL power input of the system is covered by the electrical power meters.

Power supply layouts with power meters

In most cases, one power meter that measures the entire system (compressor, backup heater and hydro) is sufficient.

Power meter	Measures	Type	Connection
1	Entire system	1N~ or 3N~ depending on the backup heater	X5M/5+6

In case of the following combination, you need 2 power meters:

- Dual cable power supply (= split power supply)
- + Preferential kWh rate power supply with separate normal kWh rate power supply

Power meter	Measures(1)	Type	Connection
1	Hydro and backup heater	1N~ or 3N~ depending on the backup heater	X5M/5+6
2	Compressor	1N~	X5M/3+4

(1) In the software the power consumption data of both meters is added so you do NOT have to set which meter covers which power consumption.

Exceptional cases. You can also use a second power meter if:

- The power range of one meter is insufficient.
- The power meter cannot easily be installed in the electrical cabinet.
- 230 V and 400 V three-phase grids are combined (very uncommon), because of technical limitations of power meters.

Examples of power supply layouts with power meters

#1: Single cable power supply (= combined power supply)

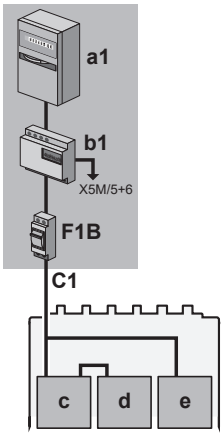

#2: Dual cable power supply (= split power supply)

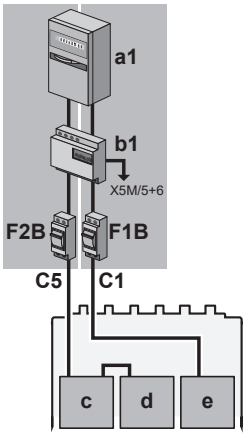

#3: Single cable power supply (= combined power supply)

+

Preferential kWh rate power supply without separate normal kWh rate power supply

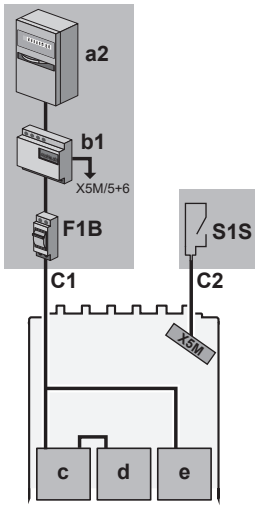

#4: Dual cable power supply (= split power supply)

+

Preferential kWh rate power supply without separate normal kWh rate power supply

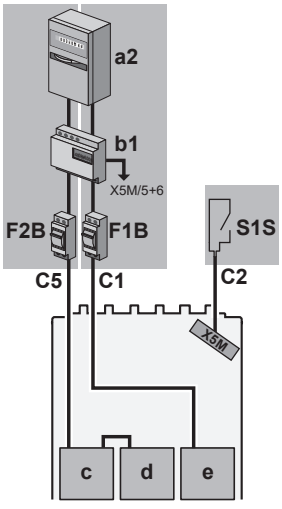

#5: Single cable power supply (= combined power supply) + Preferential kWh rate power supply with separate normal kWh rate power supply **NOT ALLOWED**	#6: Dual cable power supply (= split power supply) + Preferential kWh rate power supply with separate normal kWh rate power supply 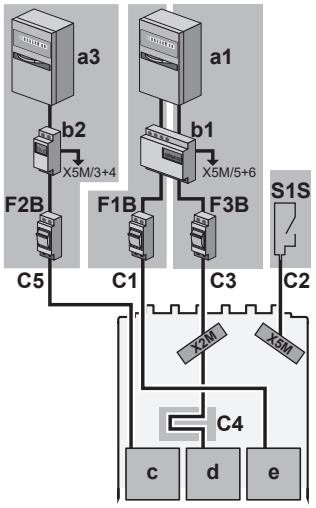

Legend:

a	Electrical cabinet:	
	a1	Normal kWh rate power supply (1N~ or 3N~ depending on the backup heater)
	a2	Preferential kWh rate power supply (1N~ or 3N~ depending on the backup heater)
	a3	Preferential kWh rate power supply (1N~)
b	**b1**	Power meter 1 (1N~ or 3N~ depending on the backup heater)
	b2	Power meter 2 (1N~)
	For details about connecting the power meters to the unit, see "9.2.4 To connect the electricity meters" [▸ 99].	
c	Compressor (1N~)	
d	Hydro (1N~)	
e	Backup heater (1N~ or 3N~)	
C1~C5	For details about **C1~C5**, see "9.2.1 To connect the main power supply" [▸ 91].	
F1B~F3B	Overcurrent fuse	
S1S	Preferential kWh rate power supply contact	

6.6 Setting up the power consumption control

You can use the following power consumption controls. For more information about the corresponding settings, see "Power consumption control" [▸ 199].

#	Power consumption control
1	"6.6.1 Permanent power limitation" [▶ 52] ▪ Allows you to limit the power consumption of the entire heat pump system (sum of indoor unit and backup heater) with one permanent setting. ▪ Limitation of power in kW or current in A.
2	"6.6.2 Power limitation activated by digital inputs" [▶ 53] ▪ Allows you to limit the power consumption of the entire heat pump system (sum of indoor unit and backup heater) via 4 digital inputs. ▪ Limitation of power in kW or current in A.
3	"6.6.4 Current limitation by current sensors" [▶ 55] ▪ Allows you to limit the current of the household by limiting the current of the heat pump system (sum of indoor unit and backup heater). ▪ Limitation of current in A.
4	"6.6.5 BBR16 power limitation" [▶ 55] ▪ **Restriction:** Only available in Swedish language. ▪ Allows you to comply with BBR16 regulations (Swedish energy regulations). ▪ Limitation of power in kW. ▪ Can be combined with the other power consumption controls. If you do so, the unit uses the most restrictive control.

NOTICE

It is possible to install a field fuse with lower than recommended rating over the heat pump. For this you must modify field setting [2-0E] according to the maximum allowed current over the heat pump.

Note that field setting [2-0E] overrules all power consumption control settings. Power limiting the heat pump will reduce performance.

6.6.1 Permanent power limitation

Permanent power limitation is useful to assure a maximum power or current input of the system. In some countries, legislation limits the maximum power consumption for space heating and DHW production.

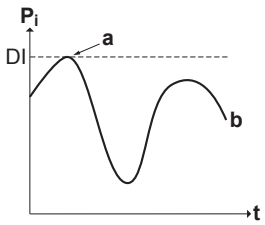

P_i Power input
t Time
DI Digital input (power limitation level)
a Power limitation active
b Actual power input

Setup and configuration

- No additional equipment needed.

- Set the power consumption control settings in [9.9] via the user interface (see "Power consumption control" [▸ 199]):
  - Select continuous limitation mode
  - Select the type of limitation (power in kW or current in A)
  - Set the desired power limitation level

6.6.2 Power limitation activated by digital inputs

Power limitation is also useful in combination with an energy management system.

The power or current of the entire Daikin system is limited dynamically by digital inputs (maximum four steps). Each power limitation level is set via the user interface by limiting one of the following:

- Current (in A)
- Power input (in kW)

The energy management system (field supply) decides the activation of a certain power limitation level. **Example:** To limit the maximum power of the entire house (lighting, domestic appliances, space heating…).

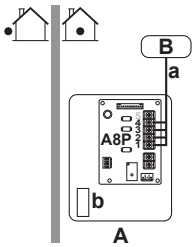

A Indoor unit
B Energy management system
a Power limitation activation
b Backup heater

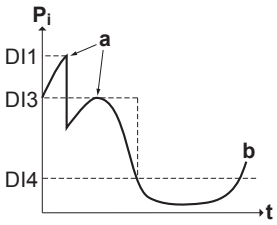

P_i Power input
t Time
DI Digital inputs (power limitation levels)
a Power limitation active
b Actual power input

Setup

- Demand PCB (option EKRP1AHTA) needed.
- Maximum four digital inputs are used to activate the corresponding power limitation level:
  - DI1 = strongest limitation (lowest energy consumption)
  - DI4 = weakest limitation (highest energy consumption)

- Specification of the digital inputs:
  - DI1: S9S (limit 1)
  - DI2: S8S (limit 2)
  - DI3: S7S (limit 3)
  - DI4: S6S (limit 4)
- Refer to the wiring diagram for more information.

Configuration

- Set the power consumption control settings in [9.9] via the user interface (for the description of all settings, see "Power consumption control" [▸ 199]):
  - Select limitation by digital inputs.
  - Select the type of limitation (power in kW or current in A).
  - Set the desired power limitation level corresponding to each digital input.

> **INFORMATION**
>
> In case more than 1 digital input is closed (at the same time), the digital input priority is fixed: DI4 priority>...>DI1.

6.6.3 Power limitation process

The compressor has better efficiency than the electrical heater. Therefore, the electrical heater is limited and turned OFF first. The system limits power consumption in the following order:

1. Limits the backup heater.
2. Turns OFF the backup heater.
3. Limits the compressor.
4. Turns OFF the compressor.

Example

If the power limitation level does NOT allow operation of full backup heater capacity, then power consumption is limited as follows:

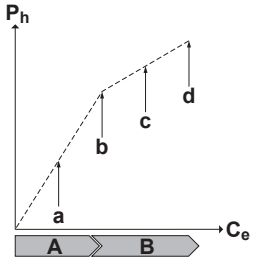

P_h Produced heat
C_e Consumed energy
A Compressor
B Backup heater
a Limited compressor operation
b Full compressor operation
c Limited backup heater operation
d Full backup heater operation

6.6.4 Current limitation by current sensors

INFORMATION

Restriction: Current limitation by current sensors is only available for 3-phase setups ([9.3.2]=2 (`Installer settings` > `Backup heater` > `Voltage` = `400V, 3ph`)).

NOTICE

Disconnected sensor. If you use current limitation by current sensors and one of the sensors is disconnected, the corresponding phase is not limited anymore.

Current sensors can be used to limit the consumption of the heat pump on every phase taking into account the set household fuse and the actual consumption of other appliances.

Current sensors must be installed before the main fuses on each phase to make use of this feature. This function can be useful in countries where the government gives incentives to limit the fuse sizes.

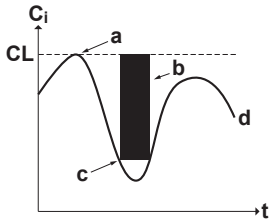

Ci Current input
t Time
CL Current limit corresponding to fuse size
a Current limitation active (no external load)
b External load
c Current limitation active (with external load)
d Actual current input

Setup and configuration

	See: ▪ The installation manual of the current sensors ▪ "To perform a current sensor phase check" [▸ 217]
	Wires: 3×2. Use part of the cable (40 m) delivered as accessory.
	See "Power consumption control" [▸ 199]: [9.9.1]=3 (`Power consumption control` = `Current sensor`) [9.9.E] `Current sensor offset`

6.6.5 BBR16 power limitation

INFORMATION

Restriction: BBR16 settings are only visible when the language of the user interface is set to Swedish.

NOTICE

2 weeks to change. After you activated BBR16, you only have 2 weeks to change its settings (`BBR16 activation` and `BBR16 power limit`). After 2 weeks, the unit freezes these settings.

Note: This is different from the permanent power limitation, which is always changeable.

Use the BBR16 power limitation when you must comply with BBR16 regulations (Swedish energy regulations).

You can combine the BBR16 power limitation with the other kW power consumption controls. If you do so, the unit uses the most restrictive control.

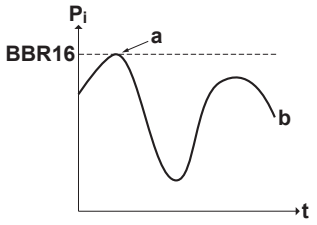

P_i Power input
t Time
BBR16 BBR16 limit level
a Power limitation active
b Actual power input

Setup and configuration

- No additional equipment needed.
- Set the power consumption control settings in [9.9] via the user interface (see "Power consumption control" [▸ 199]):
  - Activate BBR16
  - Set the desired power limitation level

6.7 Setting up an external temperature sensor

Indoor ambient temperature

You can connect one external temperature sensor. It can measure the indoor ambient temperature. We recommend to use an external temperature sensor in the following cases:

- In room thermostat control, the dedicated Human Comfort Interface (BRC1HHDA) is used as room thermostat and it measures the indoor ambient temperature. Therefore, the dedicated Human Comfort Interface must be installed on a location:
  - Where the average temperature in the room can be detected
  - That is NOT exposed to direct sunlight
  - That is NOT near a heat source
  - That is NOT affected by outside air or air draught because of, for example, door opening/closing
- If this is NOT possible, we recommend to connect a remote indoor sensor (option KRCS01-1).
- Setup and configuration:

	See: ▪ Installation manual of the remote indoor sensor ▪ Addendum book for optional equipment
	Wires: 2×0.75 mm²
	[9.B.1]=2 (`External sensor` = `Room`) [1.7] `Room sensor offset`

Outdoor ambient temperature

The remote outdoor sensor (delivered as accessory) measures the outdoor ambient temperature.

- Setup and configuration: See "9.2.2 To connect the remote outdoor sensor" [▸ 97] (+ the installation manual of the remote outdoor sensor (delivered as accessory)).

6.8 Setting up passive cooling

INFORMATION

Restriction: Passive cooling is only possible for:

- Heating only models
- Brine temperatures between 0 and 20°C

Passive cooling is cooling without using the compressor. For passive cooling the brine circuit must be branched over the cooling fan coils.

Setup

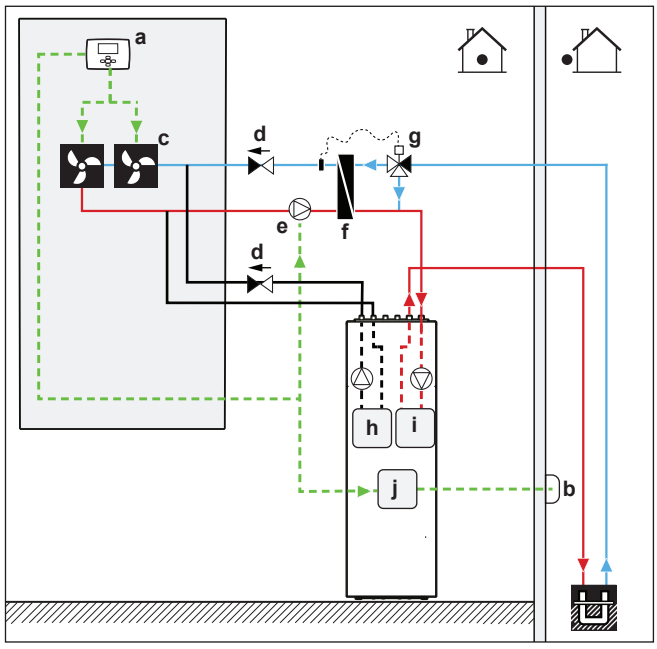

a Thermostat
b Remote outdoor sensor
c Fan coil units
d Non-return valve (field supply)
e Pump
f Plate heat exchanger for passive cooling (field supply)
g Temperature controlled mixing valve (field supply)

h Plate heat exchanger (space heating/cooling circuit)
i Plate heat exchanger (brine circuit)
j Hydro module

- A thermostat input contact creates a demand for the brine pump to run. For more information, see "9.2.12 To connect the thermostat for passive cooling" [▶ 108].
- An external circulation pump is required and needs to be controlled by the external thermostat.
- A non-return valve must prevent backflow to the inlet of the passive cooling loop and force the brine to go through the borehole.

Configuration

None.

6.9 Setting up the brine low pressure switch

Depending on the applicable legislation, you might have to install a brine low pressure switch (field supply).

The brine low pressure switch can be used to notify the user when there is a leak in the brine circuit. The switch (normally closed) is triggered when the pressure in the brine circuit is lower than the threshold value of the switch.

NOTICE

Mechanical. We recommend to use a mechanical brine low pressure switch. If an electrical brine low pressure switch is used, capacitive currents might disturb the flow switch operation causing an error on the unit.

NOTICE

Before disconnecting. If you want to remove or disconnect the brine low pressure switch, first set [C-0B]=0 (brine low pressure switch not installed). If not, this causes an error.

If [C-0B]=1 (brine low pressure switch installed), and the brine low pressure switch is triggered, then:

Heat pump operation	Stops with error. When the pressure in the brine circuit is restored, a power restart of the system is required.
Emergency mode	Activates
10-day brine pump operation Passive cooling Brine pump actuator test run	Interrupts

If [C-0B]=1 (brine low pressure switch installed), and the connection to the ACS digital I/O PCB is malfunctioning, then:

Heat pump operation	Stops with error. When the malfunction is over, the unit resumes operation.

Emergency mode	Activates but no heating is possible because the backup heater is disconnected from the ACS digital I/O PCB.
10-day brine pump operation Passive cooling Brine pump actuator test run	Interrupts

Setup

See "9.2.11 To connect the brine low pressure switch" [▸ 106].

Configuration

See "Brine low pressure switch" [▸ 203].

7 Unit installation

In this chapter

7.1 Preparing the installation site 60
7.1.1 Installation site requirements of the indoor unit 60
7.2 Opening and closing the unit 61
7.2.1 About opening the unit 61
7.2.2 To open the indoor unit 62
7.2.3 To remove the hydro module from the unit 65
7.2.4 To close the indoor unit 67
7.3 Mounting the indoor unit 67
7.3.1 About mounting the indoor unit 67
7.3.2 Precautions when mounting the indoor unit 68
7.3.3 To install the indoor unit 68
7.3.4 To connect the drain hose to the drain 69

7.1 Preparing the installation site

Choose an installation location with sufficient space to transport the unit in and out of the site.

Do NOT install the unit in places often used as work place. In case of construction works (e.g. grinding works) where a lot of dust is created, the unit MUST be covered.

WARNING

The appliance shall be stored in a room without continuously operating ignition sources (example: open flames, an operating gas appliance or an operating electric heater).

7.1.1 Installation site requirements of the indoor unit

INFORMATION

Also read the precautions and requirements in the "2 General safety precautions" [▸ 10].

- Mind the following spacing installation guidelines:

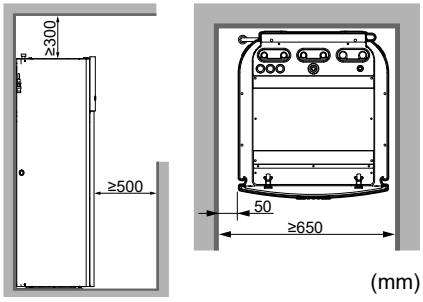

INFORMATION

If you have limited installation space and need to install the option kit EKGSPOWCAB (= power cable for split power supply), remove the left side panel before installing the unit in its final position. See "7.2.2 To open the indoor unit" [▸ 62].

- The indoor unit is designed for indoor installation only and for ambient temperatures ranging from 5~35°C.

- The foundation must be strong enough to bear the weight of the unit. Take the weight of the unit with a domestic hot water tank full of water into account.

  Make sure, in the event of a water leak, water cannot cause any damage to the installation space and surroundings.

Do NOT install the unit in places such as:

- In places where a mineral oil mist, spray or vapour may be present in the atmosphere. Plastic parts may deteriorate and fall off or cause water leakage.
- Sound sensitive areas (e.g. near a bedroom), so that the operation noise will cause no trouble.
- In places with high humidity (max. RH=85%), for example a bathroom.
- In places where frost is possible. Ambient temperature around the indoor unit must be >5°C.

Special requirements for R32

The indoor unit contains an internal refrigerant circuit (R32), but you do NOT have to do any refrigerant field piping or refrigerant charging.

The total refrigerant charge in the system is ≤1.842 kg, so the system is NOT subjected to any requirements to the installation room. However, mind the following requirements and precautions:

WARNING

- Do NOT pierce or burn refrigerant cycle parts.
- Do NOT use means to accelerate the defrosting process or to clean the equipment, other than those recommended by the manufacturer.
- Be aware that R32 refrigerant does NOT contain an odour.

WARNING

The appliance shall be stored so as to prevent mechanical damage and in a well-ventilated room without continuously operating ignition sources (example: open flames, an operating gas appliance or an operating electric heater).

WARNING

Make sure installation, servicing, maintenance and repair comply with instructions from Daikin and with applicable legislation and are executed ONLY by authorised persons.

7.2 Opening and closing the unit

7.2.1 About opening the unit

At certain times, you have to open the unit. **Example:**

- When connecting the electrical wiring
- When maintaining or servicing the unit

DANGER: RISK OF ELECTROCUTION

Do NOT leave the unit unattended when the service cover is removed.

NOTICE

For a standard installation, it is usually NOT required to open the unit. Opening the unit or any of the switch boxes is ONLY required when you want to install extra option kits. For more information, see the installation manual of the specific option kit, or below.

7.2.2 To open the indoor unit

Overview

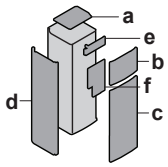

a Top panel
b User interface panel
c Front panel
d Left side panel
e Installer switch box cover
f Main switch box cover

Open

1 Remove the top panel.

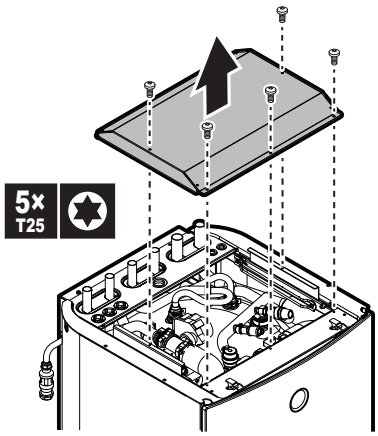

2 Remove the user interface panel. Open the hinges at the top and slide the user interface panel upwards.

NOTICE

If you remove the user interface panel, also disconnect the cables from the back of the user interface panel to prevent damage.

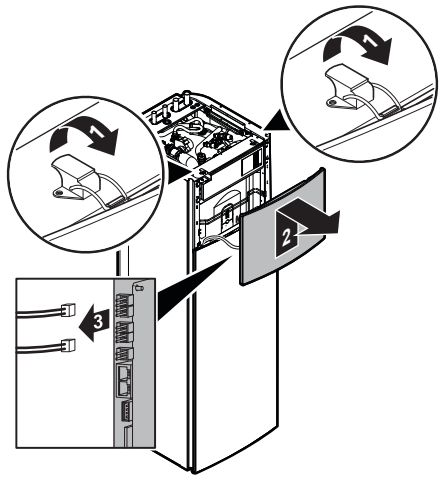

3 If necessary, remove the front panel. This is, for example, necessary when you want to remove the hydro module from the unit. See "7.2.3 To remove the hydro module from the unit" [▸ 65] for more information.

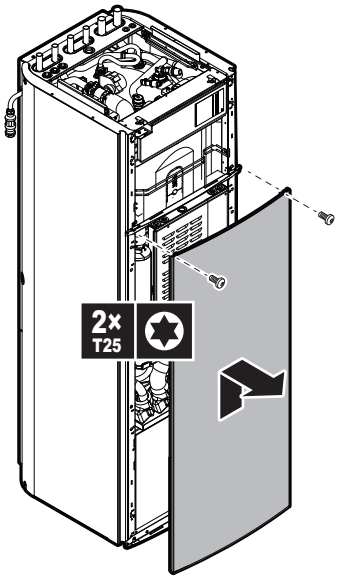

4 In case you want to install the option kit EKGSPOWCAB (= power cable for split power supply), also remove the left side panel. Also see "9.2.1 To connect the main power supply" [▸ 91].

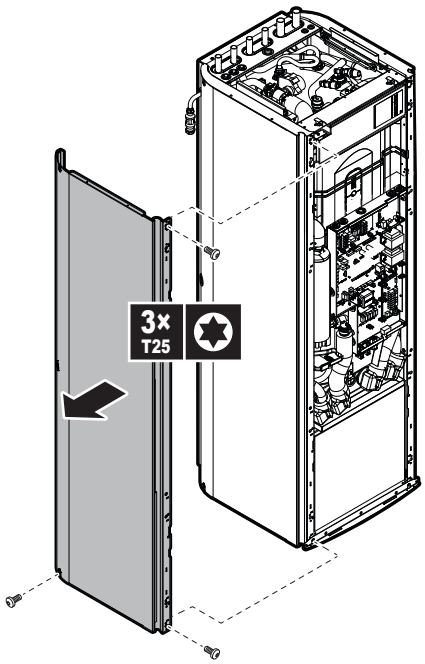

5 Open the installer switch box as follows:

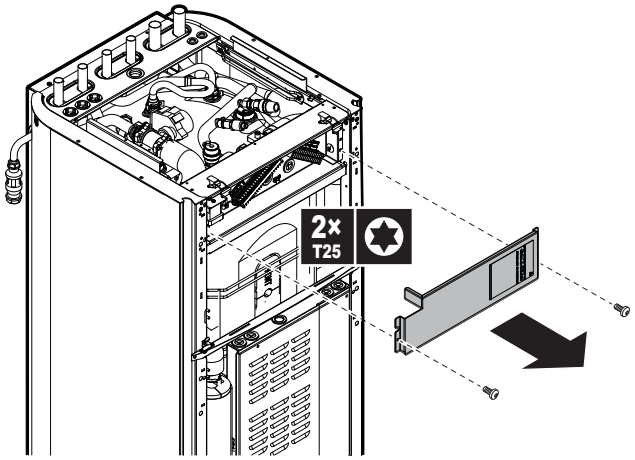

6 In case you have to install additional options that require access to the main switch box, remove the main switch box cover as follows:

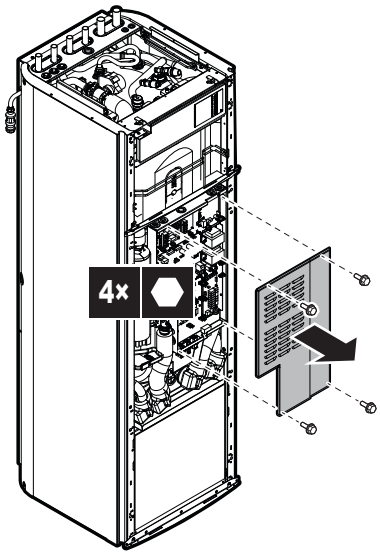

7.2.3 To remove the hydro module from the unit

Removing the hydro module is only required for easier transportation of the unit or for servicing. The removal of the module will significantly reduce the weight of the unit. This makes the unit easier to handle and carry.

1 Open the following (see "7.2.2 To open the indoor unit" [▸ 62]):

1	User interface panel	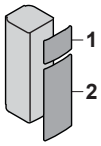
2	Front panel	

2 Remove the insulation from the shut-off valves by cutting the cable ties.

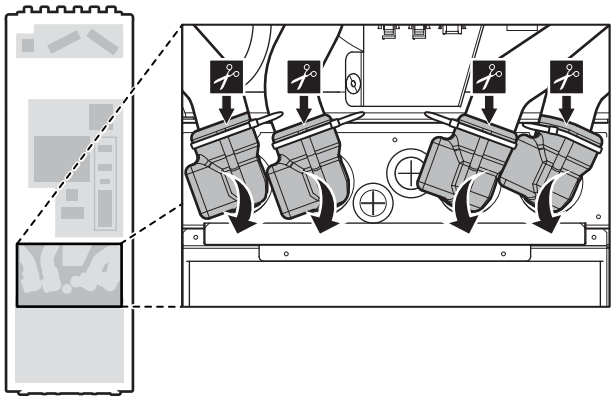

3 Remove the clips that lock the valves in place.

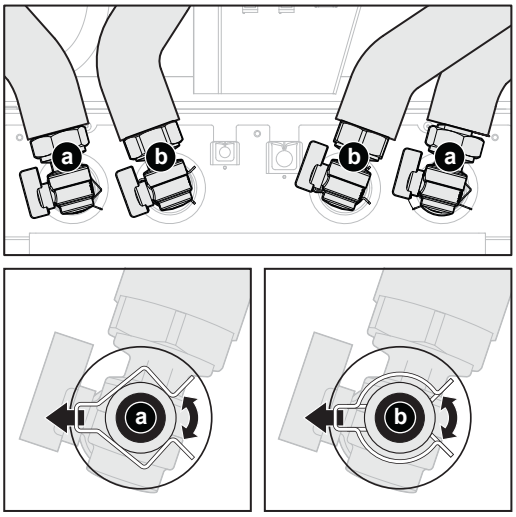

a Pipes for brine circuit
b Pipes for space heating/cooling circuit

4 Uncouple the piping.

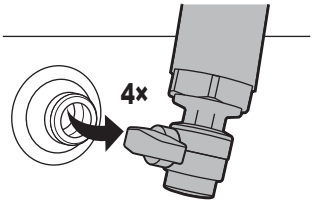

5 Remove the lower hydro module cover.

6 Unlink the connectors that run from the hydro module to the main switch box or other locations. Route the wires through the grommets of the upper hydro module cover.

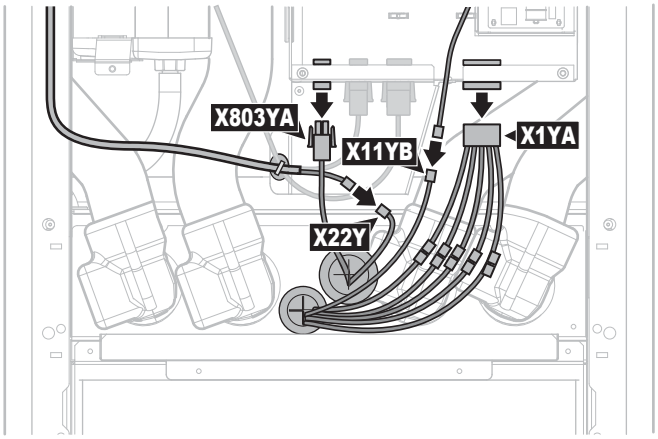

7 Remove the upper hydro module cover. You can lift up the uncoupled piping to access the screws more easily, and to take off the cover itself.

8 Remove the screw that fixes the hydro module to the bottom plate.

9 Lift the uncoupled piping and use the handle on the front of the module to carefully slide the module out of the unit. Make sure the module remains level and does not tilt forward.

CAUTION

The hydro module is heavy. It requires at least two persons to carry it.

NOTICE

Make sure not to damage any insulation during the removal process.

Removal after first installation

If the water and brine circuits have been filled before, remaining water and brine need to be drained from the hydro module before removal. In this case, perform the following actions:

1 Remove the insulation from the shut-off valves. (See step 2 in "7.2.3 To remove the hydro module from the unit" [▸ 65].)

2 Close the shut-off valves by turning the lever handles.

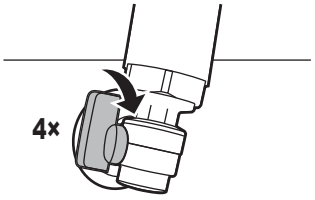

3 Remove the lower hydro module cover. (See step 5 in "7.2.3 To remove the hydro module from the unit" [▸ 65].)

4 Drain remaining water and brine from the hydro module.

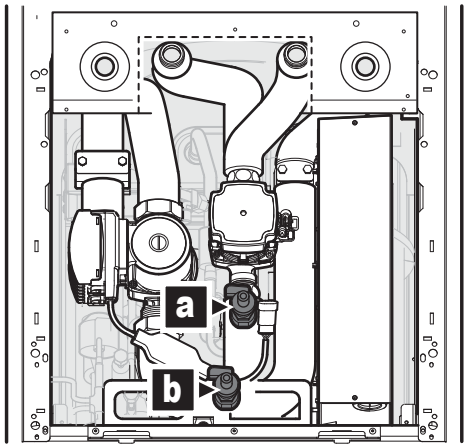

a Water drain valve
b Brine drain valve

NOTICE

Ensure that no brine or water can fall into the switch box of the hydro module.

5 Perform the remaining steps as described in "7.2.3 To remove the hydro module from the unit" [▸ 65].

7.2.4 To close the indoor unit

1 If applicable, reinstall the left side panel.
2 If applicable, reinsert the hydro module.
3 If applicable, close the cover of the main switch box and reinstall the front panel.
4 Close the cover of the installer switch box.
5 Reconnect the cables to the user interface panel.
6 Reinstall the user interface panel.
7 Reinstall the top panel.

NOTICE

When closing the indoor unit cover, make sure that the tightening torque does NOT exceed 4.1 N•m.

7.3 Mounting the indoor unit

7.3.1 About mounting the indoor unit

When

Mount the indoor unit before you connect the brine and water piping.

7.3.2 Precautions when mounting the indoor unit

INFORMATION

Also read the precautions and requirements in the following chapters:

- "2 General safety precautions" [▶ 10]
- "7.1 Preparing the installation site" [▶ 60]

7.3.3 To install the indoor unit

1. Lift the indoor unit from the pallet and place it on the floor. See "4.2.3 To handle the indoor unit" [▶ 22].
2. Connect the drain hose to the drain. See "7.3.4 To connect the drain hose to the drain" [▶ 69].
3. Slide the unit into position.
4. Adjust the height of the 4 levelling feet of the outer frame to compensate for floor irregularities. The maximum allowed deviation is 1°.

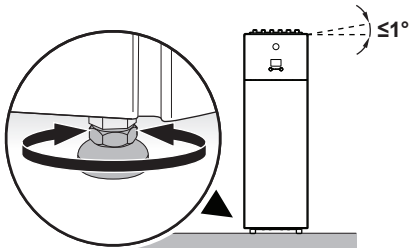

NOTICE

Do NOT tilt the unit forwards:

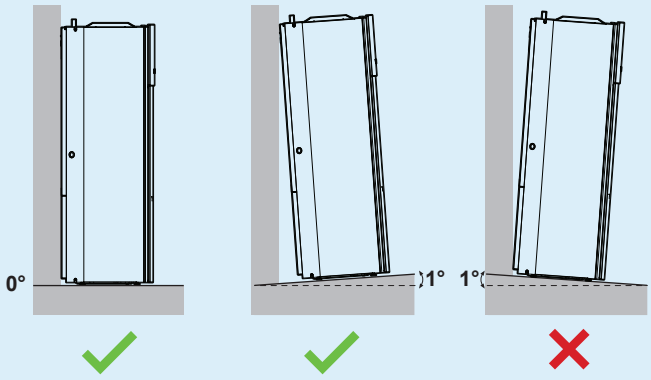

NOTICE

To avoid structural damage on unit, ONLY move the unit when levelling feet are at their lowest position.

NOTICE

For optimum sound reduction, carefully check if there is no gap between the bottom frame and the floor.

7.3.4 To connect the drain hose to the drain

Condensate can form inside the unit during cooling operation or with low brine temperatures. The top and backup heater drain pans are connected to a drain hose inside the unit. You must connect the drain hose to an appropriate drain according to the applicable legislation. The drain hose is routed through the rear panel, towards the right side of the unit.

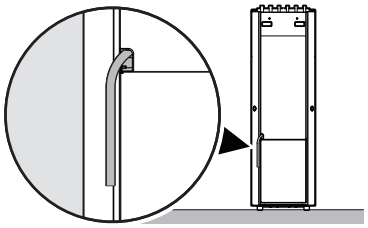

8 Piping installation

In this chapter

8.1 Preparing piping 70
8.1.1 Circuit requirements 70
8.1.2 Formula to calculate the expansion vessel pre-pressure 74
8.1.3 To check the water volume and flow rate of the space heating circuit and brine circuit 75
8.1.4 Changing the pre-pressure of the expansion vessel 76
8.2 Connecting the brine piping 76
8.2.1 About connecting the brine piping 76
8.2.2 Precautions when connecting the brine piping 76
8.2.3 To connect the brine piping 76
8.2.4 To connect the brine level vessel 77
8.2.5 To connect the brine filling kit 78
8.2.6 To fill the brine circuit 78
8.2.7 To insulate the brine piping 79
8.3 Connecting water piping 79
8.3.1 About connecting the water piping 79
8.3.2 Precautions when connecting the water piping 79
8.3.3 To connect the water piping 79
8.3.4 To connect the water piping for domestic hot water 81
8.3.5 To connect the recirculation piping 83
8.3.6 To fill the space heating circuit 84
8.3.7 To fill the domestic hot water tank 84
8.3.8 To check for water leaks 84
8.3.9 To insulate the water piping 85

8.1 Preparing piping

NOTICE

All piping MUST be installed according to section G3 of the Building Regulations.

8.1.1 Circuit requirements

INFORMATION

Also read the precautions and requirements in the "2 General safety precautions" [▸ 10].

NOTICE

In case of plastic pipes, make sure they are fully oxygen diffusion tight according to DIN 4726. The diffusion of oxygen into the piping can lead to excessive corrosion.

- **Circuit types.** Except for the refrigerant circuit, inside the unit 2 other circuits are included:
  - The circuit connected to the bore hole is referred to as the brine circuit.
  - The circuit connected to the heating emitters is referred to as the space heating circuit.
- **Connecting piping – Legislation.** Make all piping connections in accordance with the applicable legislation and the instructions in the "Installation" chapter, respecting the water inlet and outlet.
- **Connecting piping – Force.** Do NOT use excessive force when connecting the piping. Deformation of the piping can cause malfunctioning of the unit.

- **Connecting piping – Tools.** Only use appropriate tooling to handle brass, which is a soft material. If NOT, pipes will get damaged.
- **Connecting piping – Air, moisture, dust.** If air, moisture or dust gets into the circuit, problems may occur. To prevent this:
  - ONLY use clean pipes.
  - Hold the pipe end downwards when removing burrs.
  - Cover the pipe end when inserting it through a wall, to prevent dust and/or particles from entering the pipe.
  - Use a decent thread sealant to seal connections.
  - When using non-brass metallic piping, make sure to insulate both materials from each other to prevent galvanic corrosion.
  - Because brass is a soft material, use appropriate tooling for connecting the water circuit. Inappropriate tooling will cause damage to the pipes.
- **Closed circuit.** Use the indoor unit ONLY in a closed water system for brine circuit and space heating circuit. Using the system in an open water system will lead to excessive corrosion.



WARNING

When connecting to an open groundwater system, an intermediate heat exchanger is required to prevent damage (dirt, freeze ups) to the unit.

- **Expansion vessel – Water side.** To avoid cavitation, install an expansion vessel (field supply) on the entering pipe before the water pump within 10 m of the unit.
- **Glycol.** For safety reasons, it is NOT allowed to add any kind of glycol to the space heating circuit.
- **Piping length.** It is recommended to avoid long runs of piping between the domestic hot water tank and the hot water end point (shower, bath,…) and to avoid dead ends.
- **Piping diameter.** Select the piping diameter in relation to the required flow and the available external static pressure of the pump. See "17 Technical data" [▸ 240] for the external static pressure curves of the indoor unit.
- **Fluid flow.** Depending on the type of operation, the minimum required flow can be different. See "8.1.3 To check the water volume and flow rate of the space heating circuit and brine circuit" [▸ 75] for more information.
- **Field supply components – Fluid.** Only use materials that are compatible with fluid used in the system and with the materials used in the indoor unit.
- **Field supply components – Fluid pressure and temperature.** Check that all components in the field piping can withstand the fluid pressure and fluid temperature.
- **Fluid pressure – Space heating and brine circuit.** The maximum fluid pressure of the space heating and brine circuit is 3 bar (0.3 MPa).
- **Fluid pressure – Domestic hot water tank.** The maximum fluid pressure of the domestic hot water tank is 10 bar. Provide adequate safeguards in the water circuit to ensure that the maximum pressure is NOT exceeded.
- **Fluid temperature.** All installed piping and piping accessories (valve, connections,…) MUST withstand the following temperatures:

INFORMATION

The following figure is an example and may NOT completely match your system layout

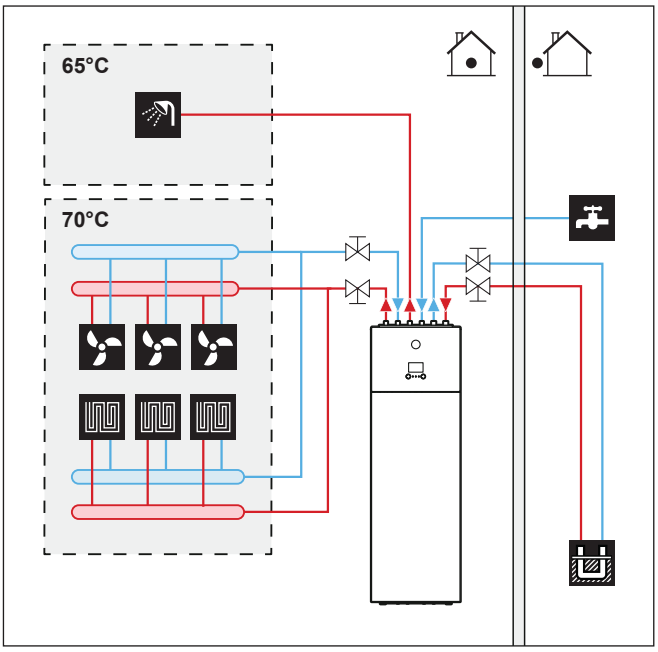

- **Drainage – Low points.** Provide drain taps at all low points of the system in order to allow complete drainage of the circuit.
- **Drainage – DHW pressure relief valves.** Provide a proper drain for the pressure relief valves (of both the domestic hot water tank and the domestic hot water tank kit) to avoid water spillage around the unit. For the discharge piping connected to these valves, respect the requirements from the table below. For more information, see "8.3.4 To connect the water piping for domestic hot water" [▸ 81].

Item	Requirement
Pressure relief valve diameter	15 mm
Discharge pipe diameter (to pressure relief valve)	15 mm
Discharge piping diameter (from tundish)	22 mm
Discharge piping material (from tundish)	Metal
Vertical length below tundish, before first elbow or bend	≥300 mm
Continuous fall after first elbow or bend	≥1:200
Maximum resistance[a]	≤9 m
Resistance created by each elbow or bend	0.8 m

[a] The maximum allowed resistance (i.e. equivalent length) is expressed as a length of straight pipe (i.e. no elbows or bends).

NOTICE

All piping MUST be installed according to section G3 of the Building Regulations.

- **Drainage – Pressure relief valve (space heating/cooling circuit).** Connect the drain hose properly to the drain to avoid water dripping out of the unit. See "7.3.4 To connect the drain hose to the drain" [▸ 69].

- **Zn-coated parts.** NEVER use Zn-coated parts in the fluid circuit. Because the internal circuit of the unit uses copper piping, excessive corrosion may occur. Zn-coated parts used in the brine circuit may lead to the precipitation of certain components in the anti-freeze fluids corrosion inhibitor.

WARNING

Due to the presence of glycol, corrosion of the system is possible. Uninhibited glycol will turn acidic under the influence of oxygen. This process is accelerated by the presence of copper and high temperatures. The acidic uninhibited glycol attacks metal surfaces and forms galvanic corrosion cells that cause severe damage to the system. Therefore it is important that:

- the water treatment is correctly executed by a qualified water specialist,
- a glycol with corrosion inhibitors is selected to counteract acids formed by the oxidation of glycols,
- no automotive glycol is used because their corrosion inhibitors have a limited lifetime and contain silicates which can foul or plug the system,
- galvanized pipes are NOT used in glycol systems since the presence may lead to the precipitation of certain components in the glycol's corrosion inhibitor.

INFORMATION

Be aware of the hygroscopic property of anti-freeze fluids: it absorbs moisture from its environment. Leaving the cap off the anti-freeze fluid container causes the concentration of water to increase. The anti-freeze fluid concentration is then lower than assumed. And in consequence, freezing can happen after all.

Preventive actions MUST be taken to ensure minimal exposure of the anti-freeze fluid to air.

- **Non-brass metallic piping.** When using non-brass metallic piping, insulate the brass and non-brass properly so that they do NOT make contact with each other. This to prevent galvanic corrosion.
- **Valve – Change-over time.** When using a 2-way valve in the space heating circuit, the maximum change-over time of the valve MUST be 60 seconds.
- **Filter.** It is strongly recommended to install an additional filter on the heating water circuit. Especially to remove metallic particles from foul heating piping, it is recommended to use a magnetic or cyclone filter, which can remove small particles. Small particles may damage the unit and will NOT be removed by the standard filter of the heat pump system.
- **Domestic hot water tank – Capacity.** To avoid stagnation of water, it is important that the storage capacity of the domestic hot water tank meets the daily consumption of domestic hot water.
- **Domestic hot water tank – After installation.** Immediately after installation, the domestic hot water tank must be flushed with fresh water. This procedure must be repeated at least once a day the first 5 consecutive days after installation.
- **Domestic hot water tank – Standstills.** In cases where during longer periods of time there is no consumption of hot water, the equipment MUST be flushed with fresh water before usage.
- **Domestic hot water tank – Disinfection.** For the disinfection function of the domestic hot water tank, see "11.5.6 Tank" [▸ 180].
- **Domestic hot water tank kit – Clean pipes.** Before installing the domestic hot water tank kit, all piping and fittings must be flushed free of flux and debris. Failure to do this may cause irreparable damage to the tank kit control valves. Flush the system by opening the hot water tap.

- **Domestic hot water tank kit – Pressure balancing.** To prevent large pressure differences at the taps and damage to the shower valve due to high-pressure cold water (5 bar), provide a dedicated 3.5-bar feed to both cold water and hot water taps. To do this, also connect the cold water supply for the cold water taps to the pressure reducing valve of the domestic hot water tank kit.

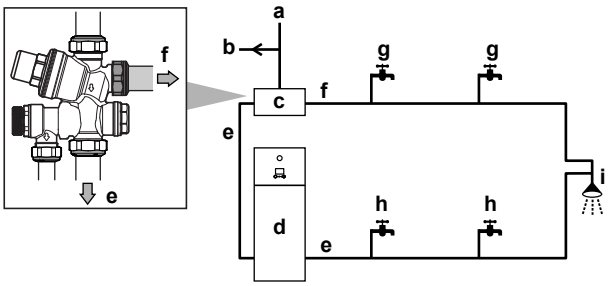

a Cold water supply into house at 5 bar
b To 5 bar taps
c Pressure reducing valve (set to 3.5 bar) (part of the domestic hot water tank kit)
d Indoor unit
e Dedicated 3.5 bar feed – to/from DHW tank
f Dedicated 3.5 bar feed – cold water
g Cold water taps
h Hot water taps
i Shower

- **Domestic hot water tank – Pressure relief valve.** A pressure relief valve (part of the inlet control group) with an opening pressure of 8 bar prevents excessive water pressure in the water circuit.
- **Domestic hot water tank – Pressure and temperature relief valve.** The pressure and temperature relief valve prevents excessive water pressure (≥10 bar) and excessive water temperature (>95°C) in the domestic hot water tank.
- **Thermostatic mixing valves.** In accordance with the applicable legislation, it may be necessary to install thermostatic mixing valves.
- **Hygienic measures.** The installation must be in compliance with the applicable legislation and may require additional hygienic installation measures.
- **Recirculation pump.** In accordance with the applicable legislation, it may be required to connect a recirculation pump in between the hot water end point and the recirculation connection of the domestic hot water tank.

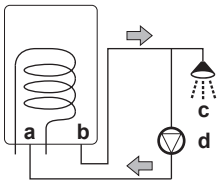

a Recirculation connection
b Hot water connection
c Shower
d Recirculation pump

8.1.2 Formula to calculate the expansion vessel pre-pressure

The pre-pressure (Pg) of the vessel depends on the installation height difference (H):

Pg=0.3+(H/10) (bar)

8.1.3 To check the water volume and flow rate of the space heating circuit and brine circuit

The unit does not have an integrated expansion vessel, but a field supplied expansion vessel can be installed in the brine circuit in case installing the brine level vessel (delivered as accessory) is not optimal. For more information, see "8.2.4 To connect the brine level vessel" [▸ 77].

To make sure that the unit operates properly:

- You must check the minimum water volume.
- You might need to adjust the pre-pressure of the expansion vessel.
- You must check the total space heating water volume in the unit.
- You must check the total brine water volume in the unit.

Minimum water volume

Check that the total water volume per circuit in the installation is minimum 20 litre, the internal water volume of the indoor unit NOT included.

INFORMATION

If a minimum heating load of 1 kW can be guaranteed and setting [4.B] `Space heating/cooling > Overshoot` (overview field setting [9-04]) is 4°C, the minimum water volume can be lowered to 10 litre.

INFORMATION

In critical processes, or in rooms with a high heat load, extra water might be required.

NOTICE

When circulation in each space heating/cooling loop is controlled by remotely controlled valves, it is important that the minimum water volume is guaranteed, even if all of the valves are closed.

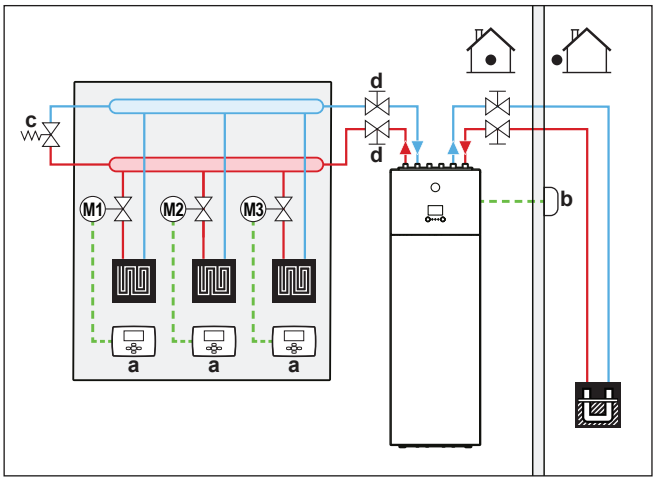

a External room thermostat
b Remote outdoor sensor
c By-pass valve (field supply)
d Shut-off valve

Minimum flow rate

Minimum required flow rate	
Heat pump operation	No minimum required flow

Minimum required flow rate	
Cooling operation	10 l/min
Backup heater operation	No minimum required flow during heating

8.1.4 Changing the pre-pressure of the expansion vessel

NOTICE

ONLY a licensed installer may adjust the pre-pressure of the expansion vessel.

The expansion vessel is field supplied. For more information on how to change the pre-pressure, see the manual of the expansion vessel.

Changing the pre-pressure of the expansion vessel should be done by releasing or increasing nitrogen pressure through the Schrader valve of the expansion vessel.

8.2 Connecting the brine piping

8.2.1 About connecting the brine piping

Before connecting the brine piping

Make sure the indoor unit is mounted.

Typical workflow

Connecting the brine piping typically consists of the following stages:

1. Connecting the brine piping.
2. Connecting the brine level vessel.
3. Connecting the brine filling kit.
4. Filling the brine circuit.
5. Insulating the brine piping.

8.2.2 Precautions when connecting the brine piping

INFORMATION

Also read the precautions and requirements in the following chapters:

- "2 General safety precautions" [▸ 10]
- "8.1 Preparing piping" [▸ 70]

8.2.3 To connect the brine piping

NOTICE

Do NOT use excessive force when connecting the field piping and make sure the piping is aligned properly. Deformation of the piping can cause malfunctioning of the unit.

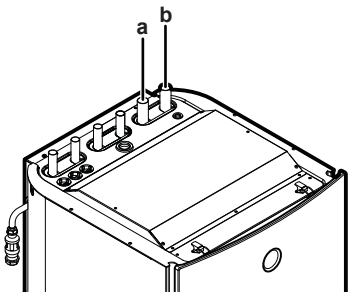

a Brine OUT (Ø28 mm)
b Brine IN (Ø28 mm)

NOTICE

To facilitate service and maintenance, it is recommended to install shut-off valves as close as possible to the inlet and outlet of the unit.

8.2.4 To connect the brine level vessel

The brine level vessel (delivered as accessory) must be installed on the brine side of the heat pump system. A safety valve is included with the vessel. The vessel serves as a visual indicator of the brine level of the system. Air trapped in the system is collected by the vessel, causing the level of brine in the vessel to decrease.

1. Install the brine level vessel as the highest point in the brine circuit on the entering brine piping.
2. Mount the included safety valve on top of the vessel.
3. Install a shut-off valve (field supplied) below the vessel.

NOTICE

If it is not possible to install the brine level vessel as the highest point in the circuit, install an expansion vessel (field supply) and install the safety valve in front of the expansion vessel. Failure to observe this instruction may result in malfunctioning of the unit.

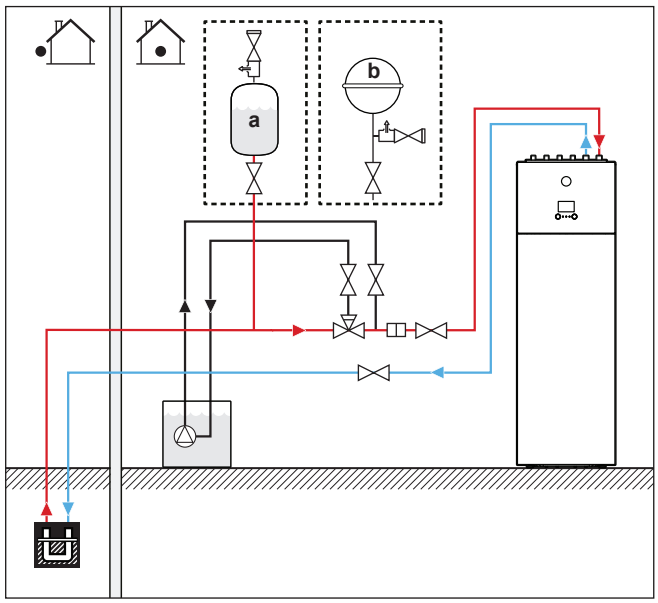

a Brine level vessel (accessory)
b Expansion vessel (field supply, in case brine level vessel cannot be installed as the highest point)

If the level of brine in the vessel is lower than 1/3, fill the vessel with brine:

4 Close the shut-off valve below the vessel.
5 Remove the safety valve on top of the vessel.
6 Top up the vessel with brine until it is approximately 2/3 filled.
7 Reconnect the safety valve.
8 Open the shut-off valve below the vessel.

8.2.5 To connect the brine filling kit

A brine filling kit (field supply or option kit KGSFILL2) can be used to flush, fill and drain the brine circuit of the system.

For installation instructions, see the installation manual of the brine filling kit.

8.2.6 To fill the brine circuit

WARNING

Before, during and after filling carefully check the brine circuit for leakage.

INFORMATION

The materials used in the brine circuit of the unit are chemically resistant to the following anti-freeze fluids:

- 40 mass% propylene glycol
- 29 mass% ethanol
- 35 mass% ethylene glycol

1 Install the brine filling kit. See "8.2.5 To connect the brine filling kit" [▶ 78].
2 Connect a field supplied brine filling system to the 3-way valve.
3 Position the 3-way valve correctly.

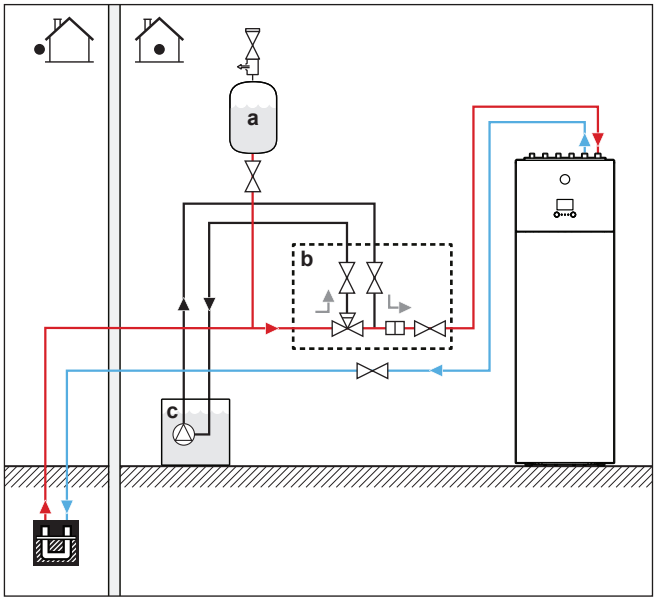

a Brine level vessel (accessory)
b Brine filling kit (field supply or option kit KGSFILL2)
c Brine filling system (field supply)

4 Fill the circuit with brine until a pressure of ±2.0 bar (= 200 kPa).
5 Return the 3-way valve to its original position.

NOTICE

A field supplied filling kit may come without a filter that protects components in the brine circuit. In this case, it is the responsibility of the installer to install a filter on the brine side of the system.

WARNING

Temperature of the fluid running through the evaporator can become negative. It MUST be protected against freezing. For more information, see setting [A-04] in "Brine freezing temperature" [▸ 207].

8.2.7 To insulate the brine piping

The piping in the complete brine circuit MUST be insulated to prevent reduction of the heating capacity.

Consider that the brine circuit piping inside the house can/will condensate. Foresee adequate insulation for these pipes.

8.3 Connecting water piping

8.3.1 About connecting the water piping

Before connecting the water piping

Make sure the indoor unit is mounted.

Typical workflow

Connecting the water piping typically consists of the following stages:

1. Connecting the water piping to the indoor unit.
2. Connecting the drain hose to the drain.
3. Connecting the recirculation piping.
4. Filling the space heating circuit.
5. Filling the domestic hot water tank.
6. Insulating the water piping.

8.3.2 Precautions when connecting the water piping

INFORMATION

Also read the precautions and requirements in the following chapters:

- "2 General safety precautions" [▸ 10]
- "8.1 Preparing piping" [▸ 70]

8.3.3 To connect the water piping

NOTICE

Do NOT use excessive force when connecting the field piping and make sure the piping is aligned properly. Deformation of the piping can cause malfunctioning of the unit.

1 Install the shut off-valve with integrated filter (delivered as accessory) at the space heating/cooling water inlet.

2 Connect the space heating/cooling IN pipe to the shut-off valve and the space heating/cooling OUT pipe to the unit.

3 Connect the domestic hot water IN and OUT pipes to the indoor unit. It is obligatory to use the accessory G3 kit EKUHWG3D to comply with UK legislation. See "8.3.4 To connect the water piping for domestic hot water" [▸ 81].

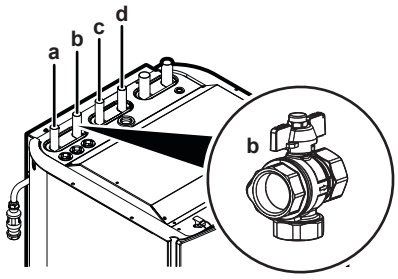

a Space heating/cooling water OUT (Ø22 mm)
b Space heating/cooling water IN (Ø22 mm) and shut-off valve with integrated filter (accessory)
c Domestic hot water: hot water OUT (Ø22 mm)
d Domestic hot water: cold water IN (Ø22 mm)

NOTICE

It is recommended to install shut-off valves to cold water IN and hot water OUT connections. Shut-off valves are field supplied.

NOTICE

About the shut-off valve with integrated filter (delivered as accessory):

- The installation of the valve at the water inlet is mandatory.
- Mind the flow direction of the valve.

NOTICE

Expansion vessel. An expansion vessel (field supply) MUST be installed on the entering piping before the water pump within 10 m of the unit.

NOTICE

To avoid damage to the surroundings in case of domestic water leakage, it is recommended to close the cold water inlet stop valves during periods of absence.

NOTICE

Install air purge valves at all local high points.

8.3.4 To connect the water piping for domestic hot water

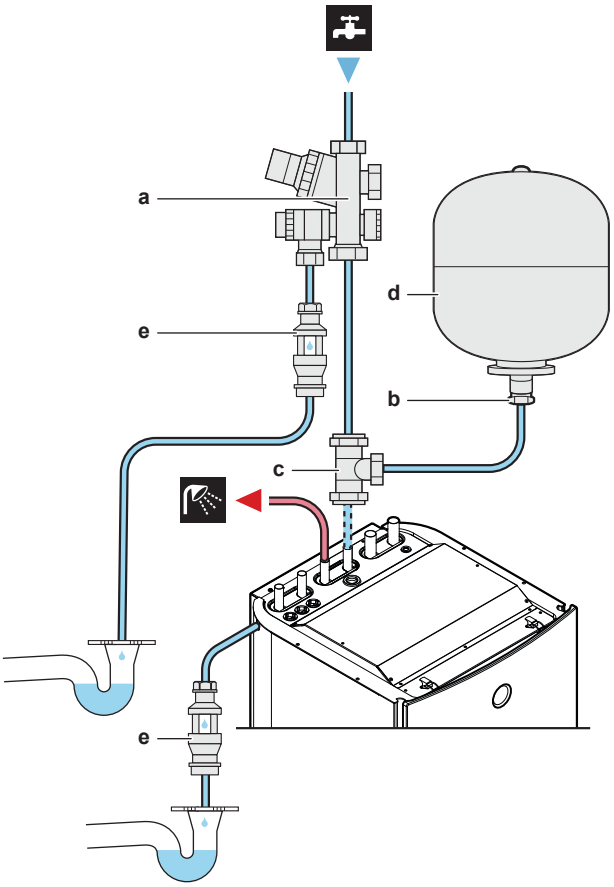

8–1 Connect water piping for DHW

- **a** Pressure reducing valve/pressure relief valve combination. Water inlet and water outlet 22 mm connection, discharge piping connection 15 mm
- **b** Adaptor 22 mm×3/4" Female BSP
- **c** T-piece 22 mm×22 mm×22 mm
- **d** Expansion vessel of 18 l – 3/4" Male BSP
- **e** Tundish 15 mm inlet, 22 mm outlet

1 Pre-assemble the adaptor and expansion vessel so that the expansion vessel is ready for installation.

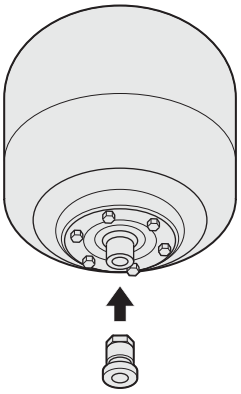

2 Mount the expansion vessel to the wall.

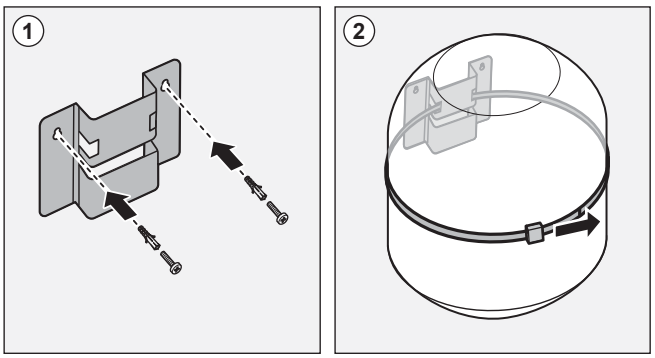

3 Fit the T-piece (part of the kit) to the domestic hot water cold water IN pipe of the unit.

4 Connect the pressure reducing valve/pressure relief valve combination (part of the kit) to the T-piece with a length of copper tube Ø22 mm (field supply).

5 Connect the expansion vessel to the T-piece with a length of copper tube Ø22 mm (field supply).

6 Connect the pressure reducing valve/pressure relief valve combination to the water mains inlet.

7 Install the tundish (part of the kit) in a vertical position within a maximum of 600 mm away from the pressure reducing valve/pressure relief valve combination.

WARNING

Install the tundish away from any electrical device. **Possible consequence:** Electrical shock or fire.

NOTICE

To ensure a free water flow through the discharge pipe, manually operate the pressure relief valve by turning its knob left.

8 Connect the 2 tundishes (1 from the pressure relief valve of the domestic hot water tank, and 1 from the pressure relief valve of the domestic hot water tank kit) to an appropriate drain according to the applicable legislation. The following example shows discharge below fixed grating (Building Regulation G3 section 3.61 gives alternative points of discharge):

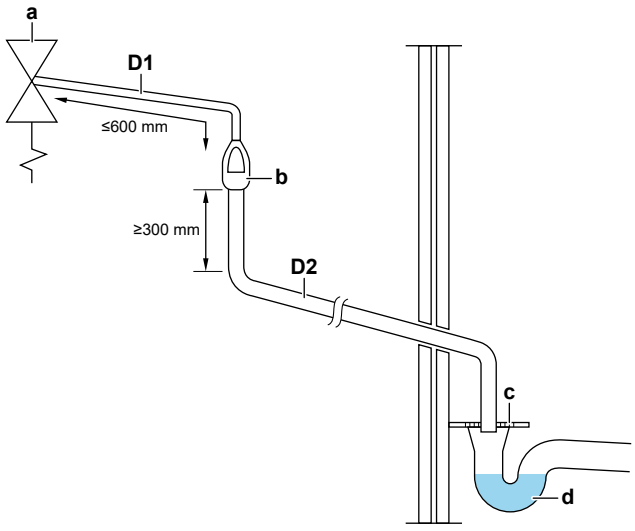

a Safety device (pressure and temperature relief valve of domestic hot water tank; pressure relief valve of domestic hot water tank kit)

b Tundish
c Fixed grating
d Trapped gully
D1 Metal discharge pipe from safety device to tundish
D2 Discharge pipe from tundish, with continuous fall. See Building Regulation G3 section 3.56, Table 03 and worked example.

9 After completing the installation, the installer has to fill out the warning label on the tank with indelible ink. The warning label can be found on the unit top plate.

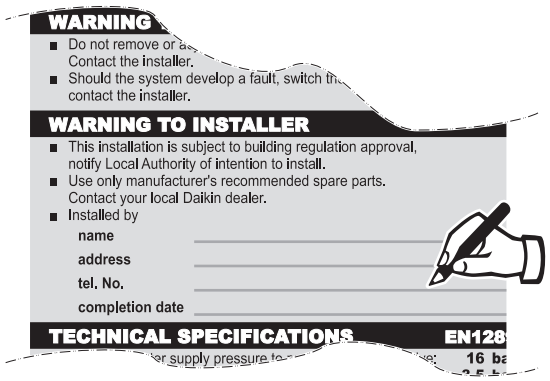

WARNING

The discharge pipes from the pressure relief valves MUST terminate in a safe and visible position without forming any risk to persons in the vicinity.

WARNING

- Discharge piping, tundish, drain valves, etc. MUST be positioned away from any electrical components.
- The discharge pipe away from the tundish MUST terminate in a safe, visible position without forming any risk to persons in the vicinity.

WARNING

- Do NOT install any valves between the domestic hot water tank and relief valves/ expansion vessel.
- Do NOT install shut-off valves between the expansion relief valve and the domestic hot water tank.

NOTICE

- All pipework and fittings must be flushed free of flux and debris prior to installing the domestic hot water tank kit. Failure to do this may cause irreparable damage to the tank kit controls. Flush the system by opening the hot water tap.
- The tundish pipework must be a 22 mm metal pipe with a minimal vertical length of 300 mm below the tundish before any elbows or bends in the pipework. All pipework must have a continuous fall of 1 in 200 thereafter. Maximum permitted (equivalent) length of 22 mm pipework is 9 m. Each bend or elbow is equivalent to 0.8 m of pipework.

8.3.5 To connect the recirculation piping

Prerequisite: Only required if you need recirculation in your system.

1 Remove the top panel from the unit, see "7.2.2 To open the indoor unit" [▸ 62].

2 Cut out the rubber grommet on top of the unit, and remove the stop. The recirculation connector is located below the space heating/cooling water outlet pipe.

3 Route the recirculation piping through the grommet and connect it to the recirculation connector.

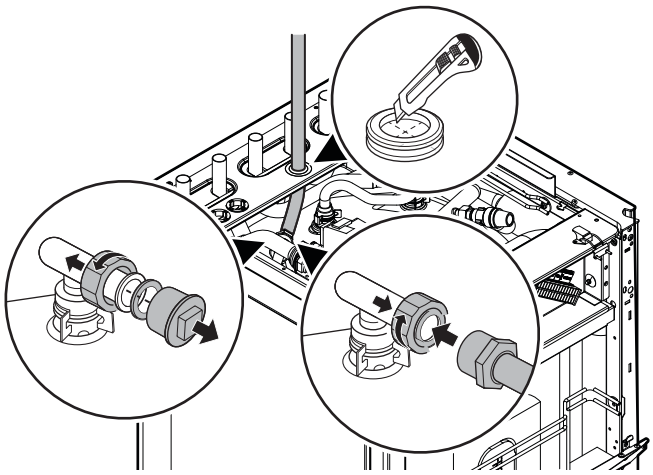

4 Reattach the top panel.

8.3.6 To fill the space heating circuit

To fill the space heating circuit, use a field supply filling kit. Make sure you comply with the applicable legislation.

NOTICE

- Air in the water circuit can cause malfunctioning of the backup heater. During filling, it may not be possible to remove all the air from the circuit. Remaining air will be removed through the automatic air purge valves during the initial operating hours of the system. Additional filling with water afterwards may be required.
- To purge the system, use the special function as described in the chapter "12 Commissioning" [▶ 211]. This function should be used to purge the heat exchanger coil of the domestic hot water tank.

8.3.7 To fill the domestic hot water tank

1 Open every hot water tap in turn to purge air from the system pipe work.

2 Open the cold water supply valve.

3 Close all water taps after all air is purged.

4 Check for water leaks.

5 Manually operate the field-installed pressure relief valve to ensure a free water flow through the discharge pipe.

8.3.8 To check for water leaks

Before insulating the water piping, it is important to detect water leaks, in particular small leaks. Small leaks can easily be overseen, but can cause damage to the unit and surroundings over a longer period of time.

NOTICE

After water piping installation, check all connections for leaks.

8.3.9 To insulate the water piping

The piping in the complete water circuit MUST be insulated to prevent reduction of the heating capacity.

Consider that the space heating piping can condensate during cooling operation. Foresee adequate insulation for these pipes.

9 Electrical installation

In this chapter

9.1 About connecting the electrical wiring 86
9.1.1 Precautions when connecting the electrical wiring 86
9.1.2 Guidelines when connecting the electrical wiring 87
9.1.3 About electrical compliance 88
9.1.4 Safety device requirements 89
9.2 Overview of electrical connections for external and internal actuators 89
9.2.1 To connect the main power supply 91
9.2.2 To connect the remote outdoor sensor 97
9.2.3 To connect the shut-off valve 98
9.2.4 To connect the electricity meters 99
9.2.5 To connect the domestic hot water pump 99
9.2.6 To connect the alarm output 100
9.2.7 To connect the space cooling/heating ON/OFF output 102
9.2.8 To connect the changeover to external heat source 103
9.2.9 To connect the power consumption digital inputs 104
9.2.10 To connect the safety thermostat (normally closed contact) 105
9.2.11 To connect the brine low pressure switch 106
9.2.12 To connect the thermostat for passive cooling 108

9.1 About connecting the electrical wiring

Before connecting the electrical wiring

Make sure the brine and water piping are connected.

Typical workflow

See "9.2 Overview of electrical connections for external and internal actuators" [▸ 89].

9.1.1 Precautions when connecting the electrical wiring

DANGER: RISK OF ELECTROCUTION

WARNING

- All wiring MUST be performed by an authorised electrician and MUST comply with the applicable legislation.
- Make electrical connections to the fixed wiring.
- All components procured on-site and all electrical construction MUST comply with the applicable legislation.

WARNING

ALWAYS use multicore cable for power supply cables.

INFORMATION

Also read the precautions and requirements in the "2 General safety precautions" [▸ 10].

WARNING

- If the power supply has a missing or wrong N-phase, equipment might break down.
- Establish proper earthing. Do NOT earth the unit to a utility pipe, surge absorber, or telephone earth. Incomplete earthing may cause electrical shock.
- Install the required fuses or circuit breakers.
- Secure the electrical wiring with cable ties so that the cables do NOT come in contact with sharp edges or piping, particularly on the high-pressure side.
- Do NOT use taped wires, stranded conductor wires, extension cords, or connections from a star system. They can cause overheating, electrical shock or fire.
- Do NOT install a phase advancing capacitor, because this unit is equipped with an inverter. A phase advancing capacitor will reduce performance and may cause accidents.

WARNING

If the supply cord is damaged, it MUST be replaced by the manufacturer, its service agent or similarly qualified persons in order to avoid a hazard.

9.1.2 Guidelines when connecting the electrical wiring

Keep the following in mind:

- If stranded conductor wires are used, install a round crimp-style terminal on the end of the wire. Place the round crimp-style terminal on the wire up to the covered part and fasten the terminal with the appropriate tool.

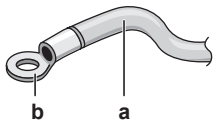

a Stranded conductor wire
b Round crimp-style terminal

- Use the following methods for installing wires:

Wire type	Installation method
Single-core wire	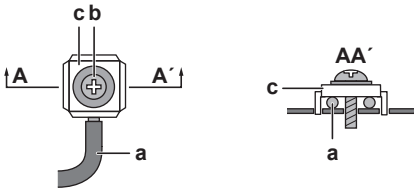 **a** Curled single-core wire **b** Screw **c** Flat washer

Wire type	Installation method
Stranded conductor wire with round crimp-style terminal	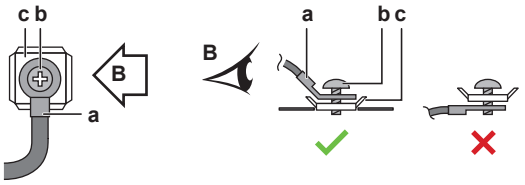 **a** Terminal **b** Screw **c** Flat washer ✓ Allowed ✕ NOT allowed

Tightening torques

Item	Tightening torque (N•m)
X2M	0.8~0.9
X5M	

9.1.3 About electrical compliance

For the models EGSAH/X06+10DA9W(G), the following statement...

Equipment complying with EN/IEC 61000-3-12 (European/International Technical Standard setting the limits for harmonic currents produced by equipment connected to public low-voltage systems with input current >16 A and ≤75 A per phase.).

...is valid in the following cases:

#	Power supply[(a)]	Operation[(b)]
1	Combined power supply (1N~, 50 Hz, 230 V AC) 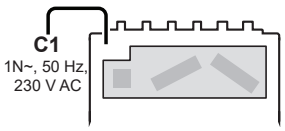	Normal or emergency
2	Split power supply (2×(1N~, 50 Hz, 230 V AC)) 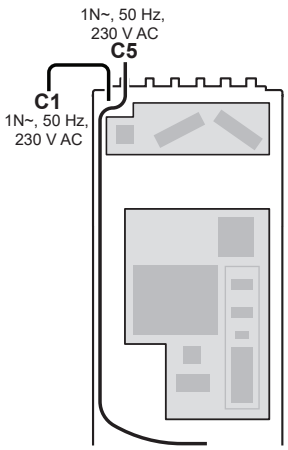	Emergency

(a) For details of C1 and C5, see "9.2.1 To connect the main power supply" [▶ 91].

(b) **Normal operation:** backup heater = maximum 3 kW
Emergency operation: backup heater = maximum 6 kW

9.1.4 Safety device requirements

Power supply

The power supply must be protected with the required safety devices, i.e. a main switch, a slow blow fuse on each phase and an earth leakage protector in accordance with the applicable legislation.

Selection and sizing of the wiring should be done in accordance with the applicable legislation based on the information mentioned in the table below.

Make sure that a separate power supply circuit is provided for this unit and that all electrical work is carried out by qualified personnel according to local laws and regulations and this manual. An insufficient power supply capacity or improper electrical construction may lead to electric shocks or fire.

For EGSAH/X06+10(U)DA9W(G):

Power supply	Minimum circuit ampacity	Recommended fuses
1N~ 50 Hz 230 V	29 A	32 A
3N~ 50 Hz 380-415 V	15.5 A	16 A

9.2 Overview of electrical connections for external and internal actuators

Item	Description
Power supply	See "9.2.1 To connect the main power supply" [▸ 91].
Remote outdoor sensor	See "9.2.2 To connect the remote outdoor sensor" [▸ 97].
Shut-off valve	See "9.2.3 To connect the shut-off valve" [▸ 98].
Electricity meter	See "9.2.4 To connect the electricity meters" [▸ 99].
Domestic hot water pump	See "9.2.5 To connect the domestic hot water pump" [▸ 99].
Alarm output	See "9.2.6 To connect the alarm output" [▸ 100].
Space cooling/heating operation control	See "9.2.7 To connect the space cooling/heating ON/OFF output" [▸ 102].
Changeover to external heat source control	See "9.2.8 To connect the changeover to external heat source" [▸ 103].
Power consumption digital inputs	See "9.2.9 To connect the power consumption digital inputs" [▸ 104].
Safety thermostat	See "9.2.10 To connect the safety thermostat (normally closed contact)" [▸ 105].
Brine low pressure switch	See "9.2.11 To connect the brine low pressure switch" [▸ 106].

Item	Description	
Thermostat for passive cooling	See "9.2.12 To connect the thermostat for passive cooling" [▶ 108].	
LAN adapter connections	See "10 LAN adapter" [▶ 109].	
Room thermostat (wired or wireless)		See: ▪ Installation manual of the room thermostat (wired or wireless) ▪ Addendum book for optional equipment
		Wires for wired room thermostat: (3 for cooling/heating operation; 2 for heating only operation)×0.75 mm² Wires for wireless room thermostat: (5 for cooling/heating operation; 4 for heating only operation)×0.75 mm² Maximum running current: 100 mA
		For the main zone: ▪ [2.9] `Control` ▪ [2.A] `Ext thermostat type` For the additional zone: ▪ [3.A] `Ext thermostat type` ▪ [3.9] (read-only) `Control`
Heat pump convector		See: ▪ Installation manual of the heat pump convectors ▪ Addendum book for optional equipment
		Wires: 4×0.75 mm² Maximum running current: 100 mA
		For the main zone: ▪ [2.9] `Control` ▪ [2.A] `Ext thermostat type` For the additional zone: ▪ [3.A] `Ext thermostat type` ▪ [3.9] (read-only) `Control`
Remote indoor sensor		See: ▪ Installation manual of the remote indoor sensor ▪ Addendum book for optional equipment
		Wires: 2×0.75 mm²
		[9.B.1]=2 (`External sensor` = `Room`) [1.7] `Room sensor offset`

Item	Description	
Current sensors		See the installation manual of the current sensors.
		Wires: 3×2. Use part of the cable (40 m) delivered as accessory.
		[9.9.1]=3 (`Power consumption control` = `Current sensor`) [9.9.E] `Current sensor offset`
Human Comfort Interface		See: ▪ Installation and operation manual of the Human Comfort Interface ▪ Addendum book for optional equipment
		Wires: 2×(0.75~1.25 mm²) Maximum length: 500 m
		[2.9] `Control` [1.6] `Room sensor offset`

9.2.1 To connect the main power supply

Use one of the following layouts to connect the power supply (for details of C1~C5, see below the table):

#	Layout	Open the unit[(a)]
1	Single cable power supply (= combined power supply) 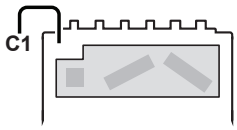 **C1**: Power supply for the backup heater, and the rest of the unit (1N~ or 3N~)	Not necessary (connection to factory-mounted cable outside of the unit)
2	Dual cable power supply (= split power supply) **Note:** This is for example needed for installations in Germany. 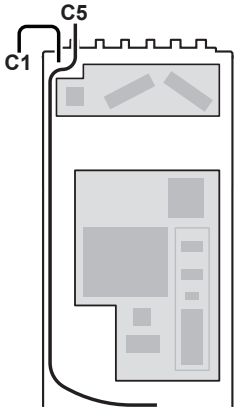 **C1**: Power supply for the backup heater (1N~ or 3N~) **C5**: Power supply for the rest of the unit (1N~)	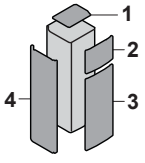

#	Layout	Open the unit[a]
3	Single cable power supply (= combined power supply) + Preferential kWh rate power supply without separate normal kWh rate power supply[b] 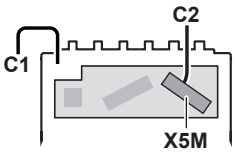 **C1**: Preferential kWh rate power supply (1N~ or 3N~) **C2**: Preferential kWh rate power supply contact	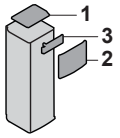
4	Dual cable power supply (= split power supply) + Preferential kWh rate power supply without separate normal kWh rate power supply[b] 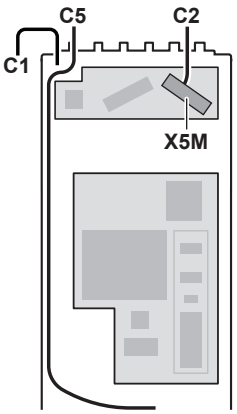 **C1**: Preferential kWh rate power supply for the backup heater (1N~ or 3N~) **C2**: Preferential kWh rate power supply contact **C5**: Preferential kWh rate power supply for the rest of the unit (1N~)	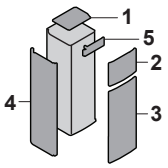
5	Single cable power supply (= combined power supply) + Preferential kWh rate power supply with separate normal kWh rate power supply[b] **NOT ALLOWED**	—

#	Layout	Open the unit[a]
6	Dual cable power supply (= split power supply) + Preferential kWh rate power supply with separate normal kWh rate power supply[b] 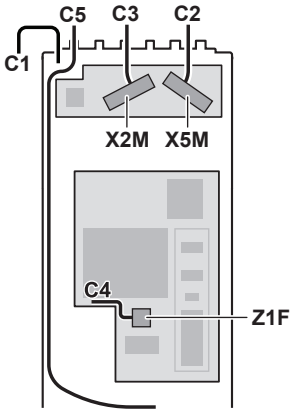 **C1**: Normal kWh rate power supply for the backup heater (1N~ or 3N~) **C2**: Preferential kWh rate power supply contact **C3**: Separate normal kWh rate power supply for the hydro (1N~) **C4**: Connection of X11Y **C5**: Preferential kWh rate power supply for the compressor (1N~)	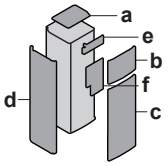

[a] See "7.2.2 To open the indoor unit" [▸ 62].
[b] Types of preferential kWh rate power supply:

INFORMATION

Some types of preferential kWh rate power supply require a separate normal kWh rate power supply to the indoor unit. This is required in the following cases:

- if the preferential kWh rate power supply is interrupted when active, OR
- if no power consumption of the indoor unit is allowed at the preferential kWh rate power supply when active.

About preferential kWh rate power supply

Electricity companies throughout the world work hard to provide reliable electric service at competitive prices and are often authorised to bill clients at benefit rates. E.g. time-of-use rates, seasonal rates, Wärmepumpentarif in Germany and Austria, ...

This equipment allows for connection to such preferential kWh rate power supply delivery systems.

Consult with the electricity company acting as provider at the site where this equipment is to be installed to know whether it is appropriate to connect the equipment in one of the preferential kWh rate power supply delivery systems available, if any.

When the equipment is connected to such preferential kWh rate power supply, the electricity company is allowed to:

- interrupt power supply to the equipment for certain periods of time;

- demand that the equipment ONLY consumes a limited amount of electricity during certain periods of time.

The indoor unit is designed to receive an input signal by which the unit switches into forced off mode. At that moment, the unit compressor will not operate.

The wiring to the unit is different depending on whether the power supply is interrupted or NOT.

Detail C1: Factory-mounted power supply cable

	Wires: 3N+GND, OR 1N+GND Maximum running current: Refer to name plate on unit.

Connect the factory-mounted power supply cable to a 1N~ or 3N~ power supply.

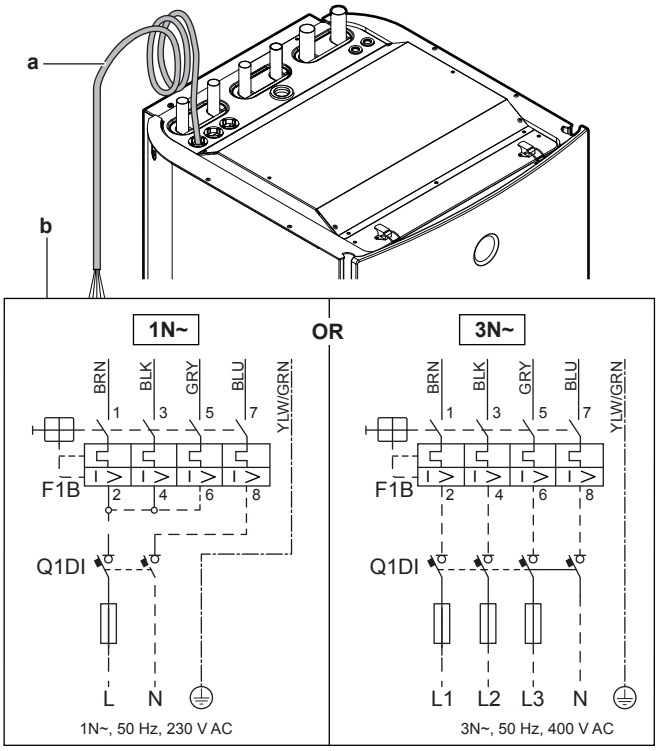

a Factory-mounted power supply cable
b Field wiring
F1B Overcurrent fuse (field supply). Recommended fuse for 1N~: 4-pole, 32 A fuse, C curve. Recommended fuse for 3N~: 4-pole, 16 A fuse, C curve.
Q1DI Earth leakage circuit breaker (field supply)

Detail C2: Preferential kWh rate power supply contact

	Wires: 2×(0.75~1.25 mm²) Maximum length: 50 m. Preferential kWh rate power supply contact: 16 V DC detection (voltage supplied by PCB). The voltage-free contact shall ensure the minimum applicable load of 15 V DC, 10 mA.

Connect the preferential kWh rate power supply contact (S1S) as follows.

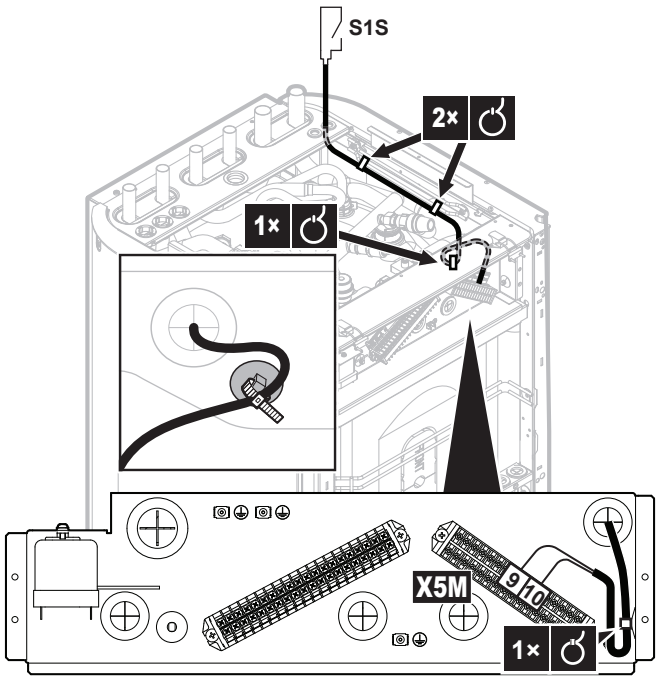

INFORMATION

The preferential kWh rate power supply contact is connected to the same terminals (X5M/9+10) as the safety thermostat. Thus, the system can have EITHER preferential kWh rate power supply OR a safety thermostat.

Detail C3: Separate normal kWh rate power supply

	Wires: 1N+GND Maximum running current: 6.3 A

Connect the separate normal kWh rate power supply as follows:

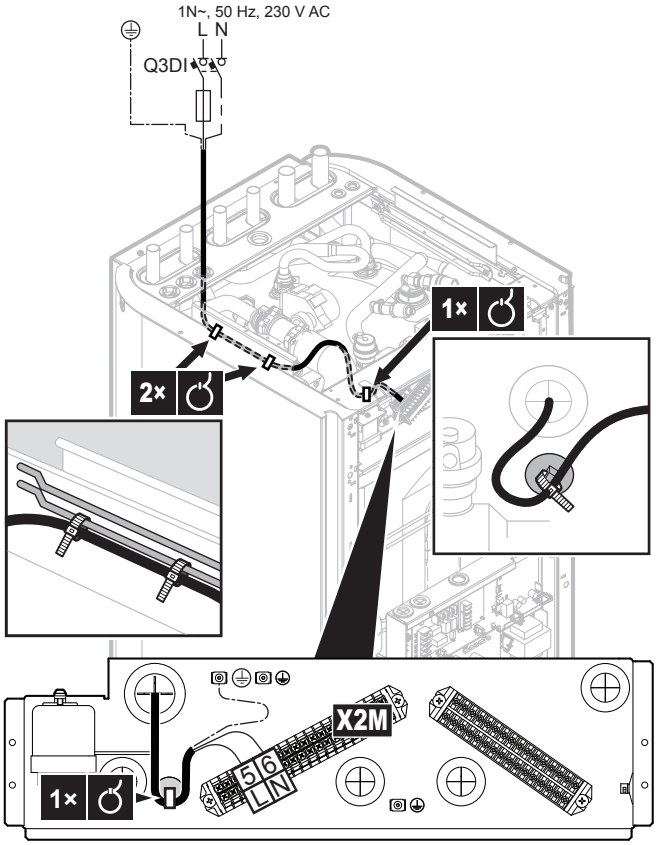

Detail C4: Connection of X11Y

Factory-mounted cables.

Disconnect X11Y from X11YA, and connect it to X11YB.

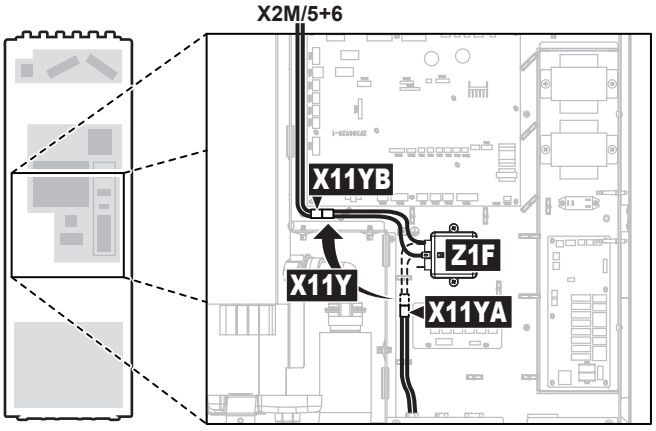

Detail C5: Option kit EKGSPOWCAB

Install the option kit EKGSPOWCAB (= power cable for split power supply).
For installation instructions, see the installation manual of the option kit.

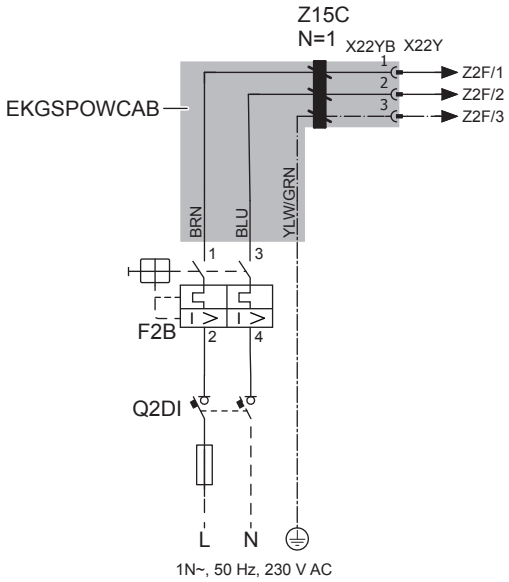

F2B Overcurrent fuse (field supply). Recommended fuse: 2-pole, 16 A fuse, C curve.
Q2DI Earth leakage circuit breaker (field supply)

Configuration power supply

	[9.3] `Backup heater` [9.8] `Benefit kWh power supply`

9.2.2 To connect the remote outdoor sensor

The remote outdoor sensor (delivered as accessory) measures the outdoor ambient temperature.

INFORMATION

If the desired leaving water temperature is weather dependent, the full time outdoor temperature measurement is important.

	Remote outdoor sensor + cable (40 m) delivered as accessory
	[9.B.2] `Ext. amb. sensor offset` (= overview field setting [2-0B]) [9.B.3] `Averaging time` (= overview field setting [1-0A])

1 Connect the external temperature sensor cable to the indoor unit.

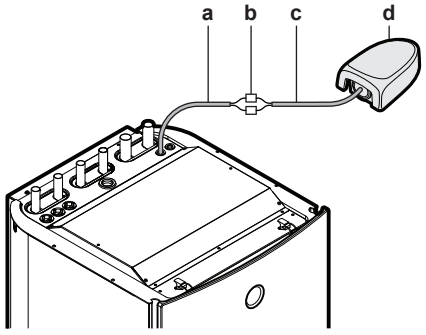

a Factory-mounted cable
b Splicing connectors (field supply)
c Remote outdoor sensor cable (40 m)(delivered as accessory)
d Remote outdoor sensor (delivered as accessory)

2 Fix the cable with cable ties to the cable tie mountings.

3 Install the remote outdoor sensor outside as described in the installation manual of the sensor (delivered as accessory).

9.2.3 To connect the shut-off valve

INFORMATION

Shut-off valve usage example. In case of one LWT zone, and a combination of underfloor heating and heat pump convectors, install a shut-off valve before the underfloor heating to prevent condensation on the floor during cooling operation.

	Wires: 2×0.75 mm² Maximum running current: 100 mA 230 V AC supplied by PCB
	[2.D] `Shut off valve`

1 Open the following (see "7.2.2 To open the indoor unit" [▸ 62]):

1	Top panel
2	User interface panel
3	Installer switch box cover

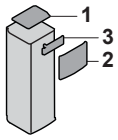

2 Connect the valve control cable to the appropriate terminals as shown in the illustration below.

NOTICE

Wiring is different for a NC (normally closed) valve and a NO (normally open) valve.

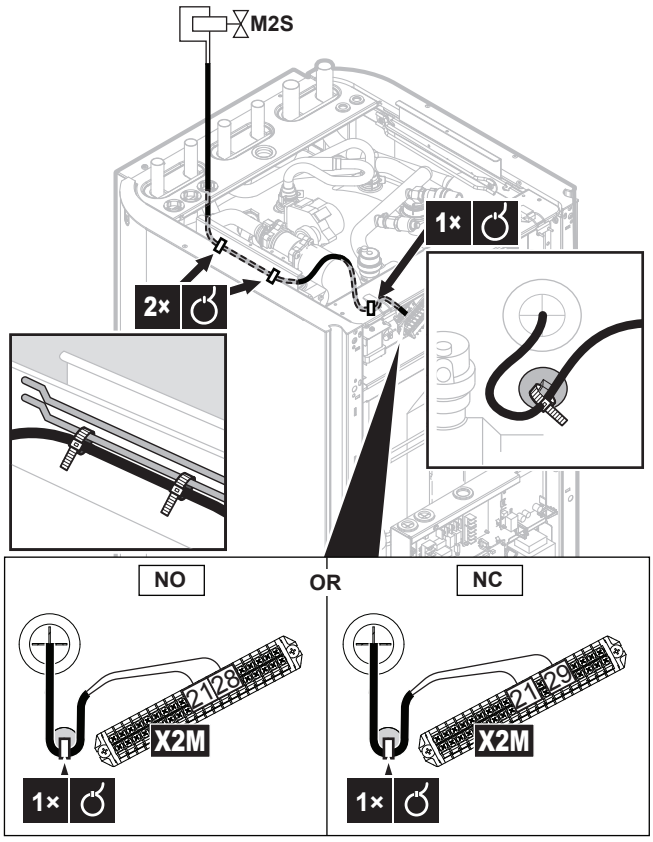

3 Fix the cable with cable ties to the cable tie mountings.

9.2.4 To connect the electricity meters

	Wires: 2 (per meter)×0.75 mm² Electricity meters: 12 V DC pulse detection (voltage supplied by PCB)
	[9.A] `Energy metering`

INFORMATION

In case of an electricity meter with transistor output, check the polarity. The positive polarity MUST be connected to X5M/6 and X5M/4; the negative polarity to X5M/5 and X5M/3.

1 Open the following (see "7.2.2 To open the indoor unit" [▸ 62]):

1	Top panel
2	User interface panel
3	Installer switch box cover

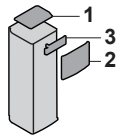

2 Connect the electricity meters cable to the appropriate terminals as shown in the illustration below.

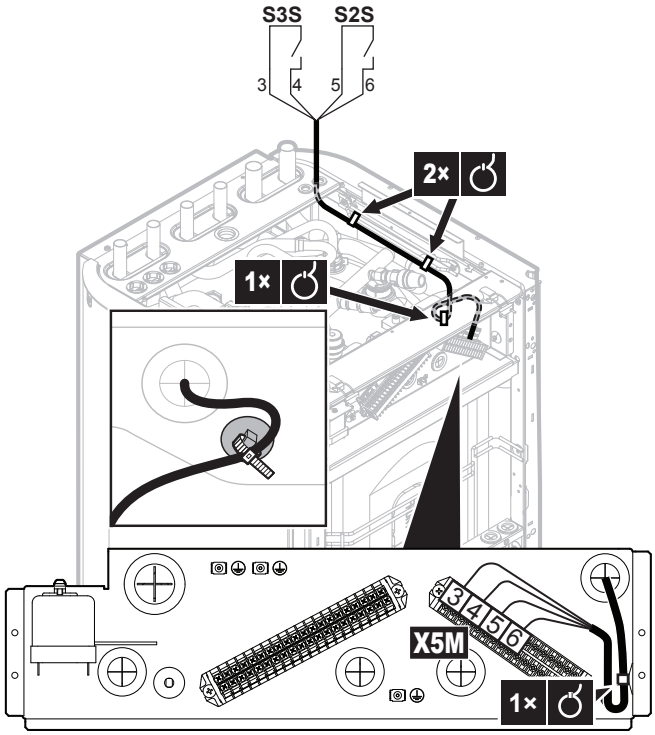

3 Fix the cable with cable ties to the cable tie mountings.

9.2.5 To connect the domestic hot water pump

	Wires: (2+GND)×0.75 mm² DHW pump output. Maximum load: 2 A (inrush), 230 V AC, 1 A (continuous)
	[9.2.2] `DHW pump` [9.2.3] `DHW pump schedule`

1 Open the following (see "7.2.2 To open the indoor unit" [▸ 62]):

1	Top panel	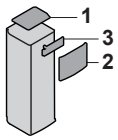
2	User interface panel	
3	Installer switch box cover	

2 Connect the domestic hot water pump cable to the appropriate terminals as shown in the illustration below.

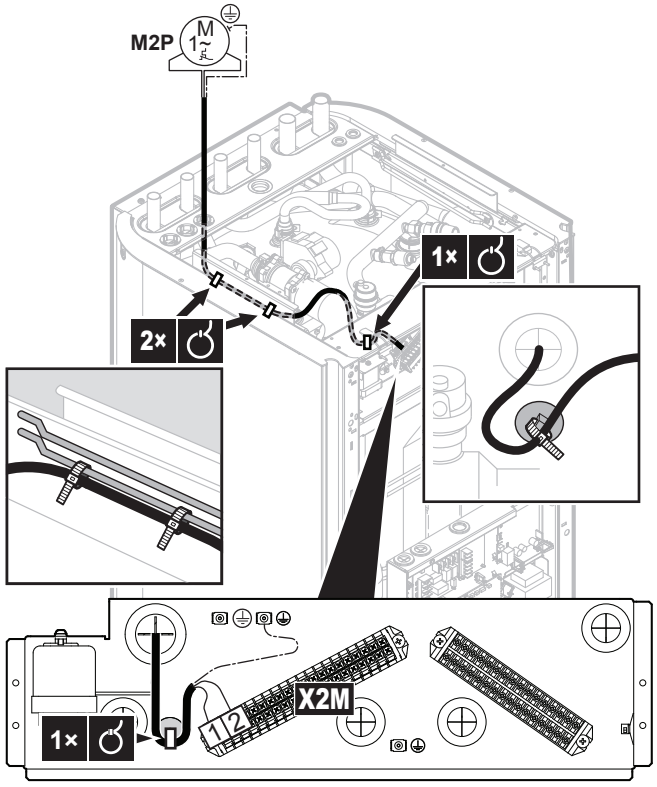

3 Fix the cable with cable ties to the cable tie mountings.

9.2.6 To connect the alarm output

	Wires: (2+1)×0.75 mm² Maximum load: 0.3 A, 250 V AC
	[9.D] `Alarm output`

1 Open the following (see "7.2.2 To open the indoor unit" [▶ 62]):

1	Top panel	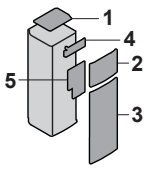
2	User interface panel	
3	Front panel	
4	Installer switch box cover	
5	Main switch box cover	

2 Connect the alarm output cable to the appropriate terminals as shown in the illustration below. Make sure to put wires 2 and 3 between the installer switch box and main switch box in a cable sleeve (field supply) so that they are double insulated.

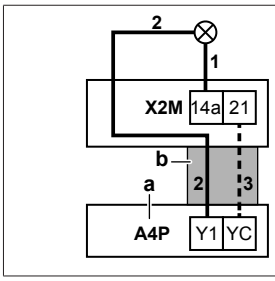

1+2	Wires connected to the alarm output
3	Wire between the installer switch box and main switch box
a	Installation of EKRP1HBAA is required.
b	Cable sleeve (field supply)

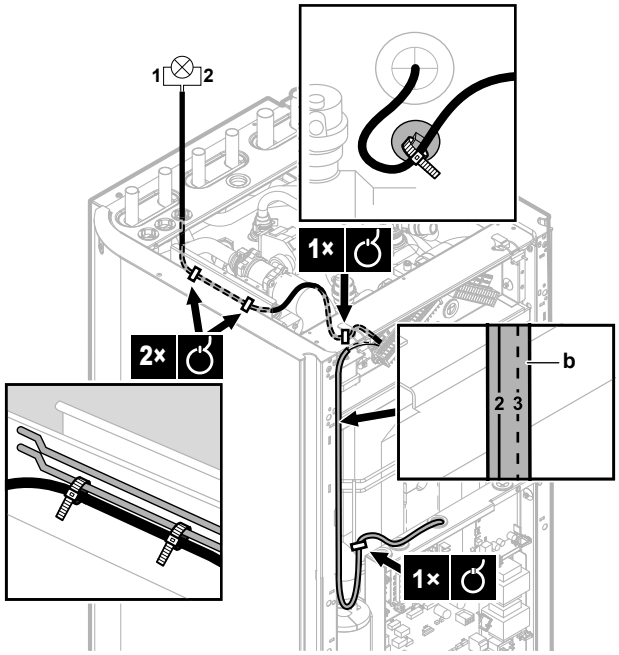

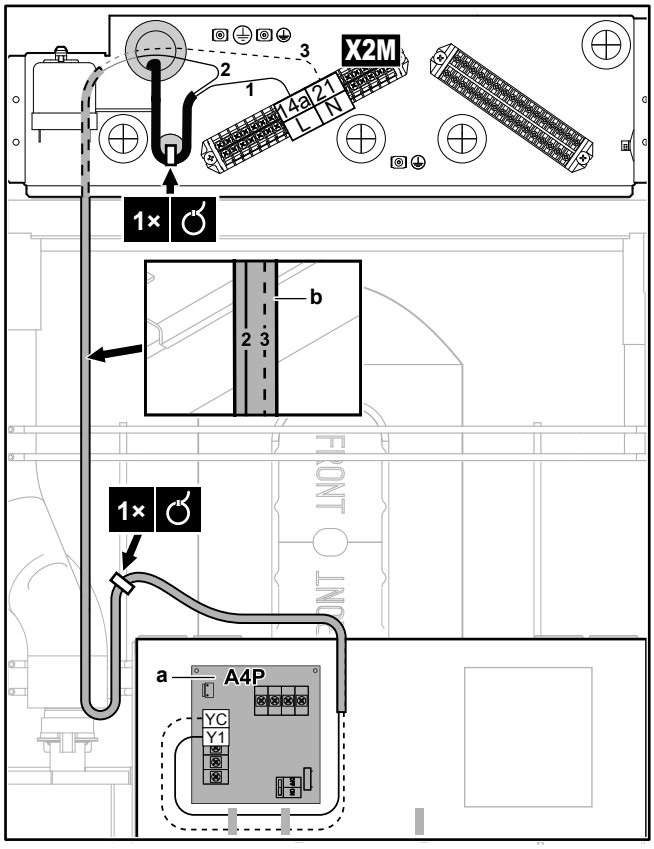

3 Fix the cable with cable ties to the cable tie mountings.

9.2.7 To connect the space cooling/heating ON/OFF output

	Wires: (2+1)×0.75 mm² Maximum load: 3.5 A, 250 V AC
	—

1 Open the following (see "7.2.2 To open the indoor unit" [▶ 62]):

1	Top panel
2	User interface panel
3	Front panel
4	Installer switch box cover
5	Main switch box cover

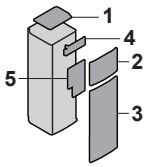

2 Connect the alarm output cable to the appropriate terminals as shown in the illustration below. Make sure to put wires 2 and 3 between the installer switch box and main switch box in a cable sleeve (field supply) so that they are double insulated.

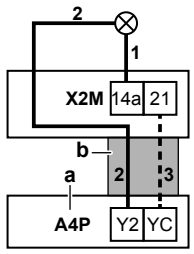

1+2	Wires connected to the alarm output
3	Wire between the installer switch box and main switch box
a	Installation of EKRP1HBAA is required.
b	Cable sleeve (field supply)

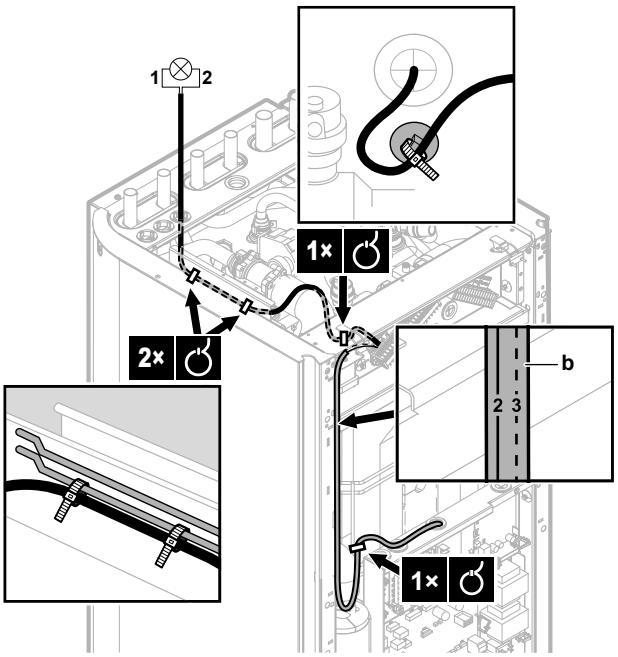

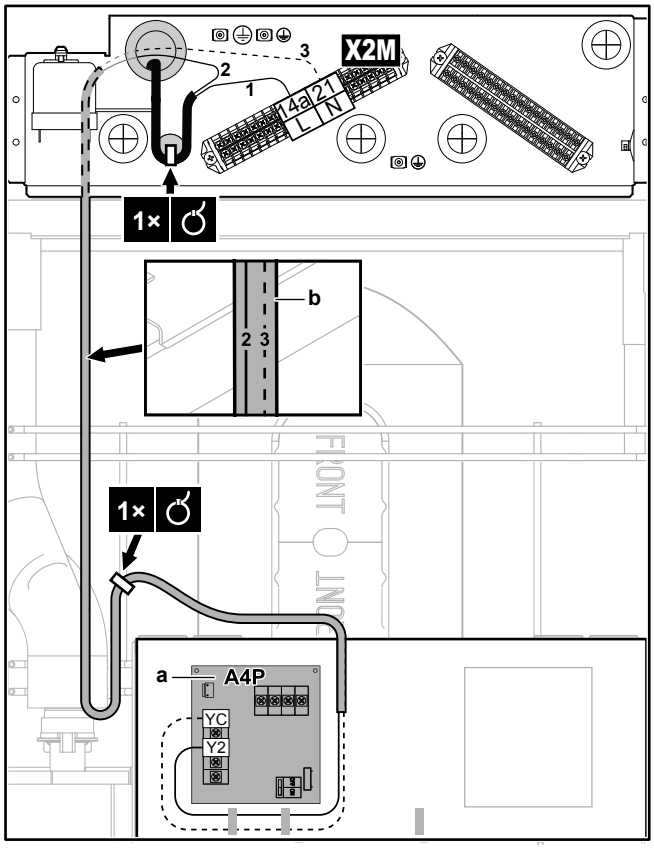

3 Fix the cable with cable ties to the cable tie mountings.

9.2.8 To connect the changeover to external heat source

INFORMATION

Bivalent is only possible in case of 1 leaving water temperature zone with:

- room thermostat control, OR
- external room thermostat control.

	Wires: 2×0.75 mm² Maximum load: 0.3 A, 250 V AC Minimum load: 20 mA, 5 V DC
	[9.C] `Bivalent`

1 Open the following (see "7.2.2 To open the indoor unit" [▶ 62]):

1	Top panel
2	User interface panel
3	Front panel
4	Main switch box cover

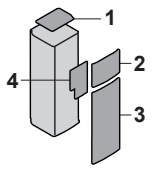

2 Connect the changeover to external heat source cable to the appropriate terminals as shown in the illustration below.

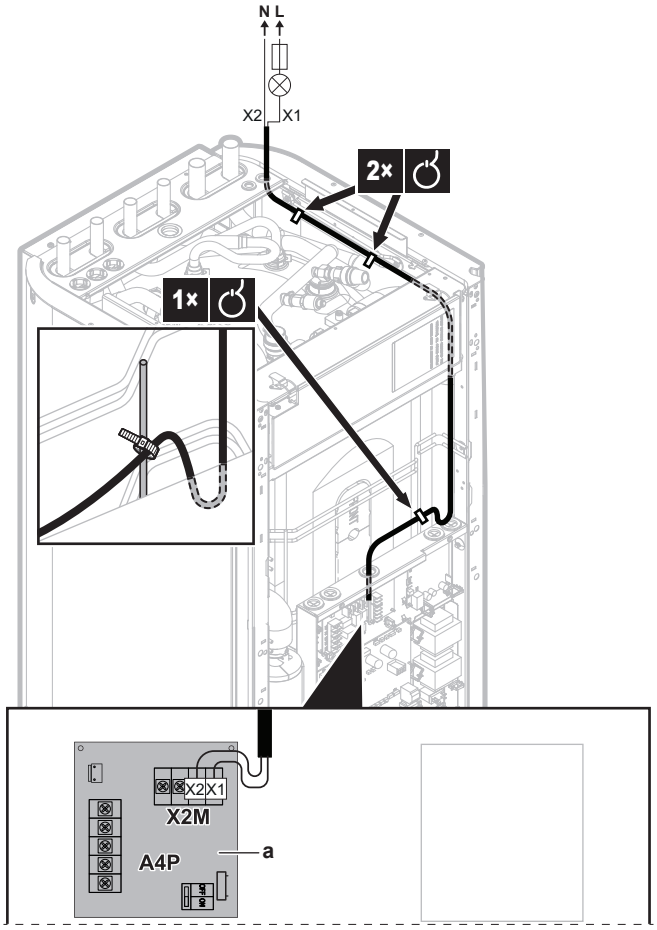

a Installation of EKRP1HBAA is required.

3 Fix the cable with cable ties to the cable tie mountings.

9.2.9 To connect the power consumption digital inputs

	Wires: 2 (per input signal)×0.75 mm² Power limitation digital inputs: 12 V DC / 12 mA detection (voltage supplied by PCB)
	[9.9] `Power consumption control`.

1 Open the following (see "7.2.2 To open the indoor unit" [▶ 62]):

1	Top panel
2	User interface panel
3	Front panel
4	Main switch box cover

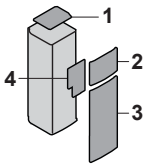

2 Connect the power consumption digital inputs cable to the appropriate terminals as shown in the illustration below.

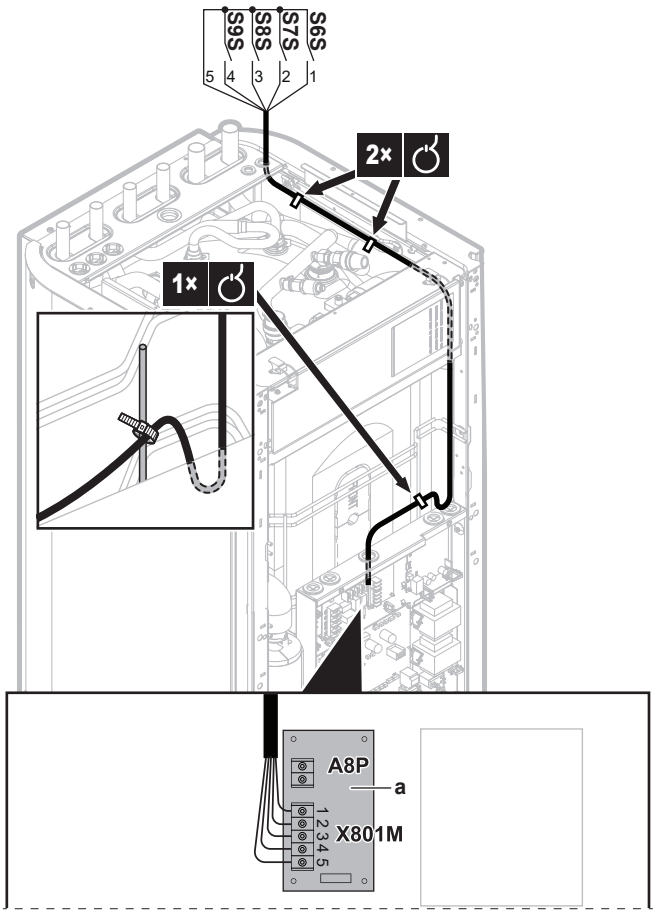

a Installation of EKRP1AHTA is required.

3 Fix the cable with cable ties to the cable tie mountings.

9.2.10 To connect the safety thermostat (normally closed contact)

	Wires: 2×0.75 mm² Safety thermostat contact: 16 V DC detection (voltage supplied by PCB)
	[9.8.1]=3 (`Benefit kWh power supply` = `Safety thermostat`)

1 Open the following (see "7.2.2 To open the indoor unit" [▸ 62]):

1	Top panel
2	User interface panel
3	Installer switch box cover

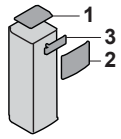

2 Connect the safety thermostat (normally closed) cable to the appropriate terminals as shown in the illustration below.

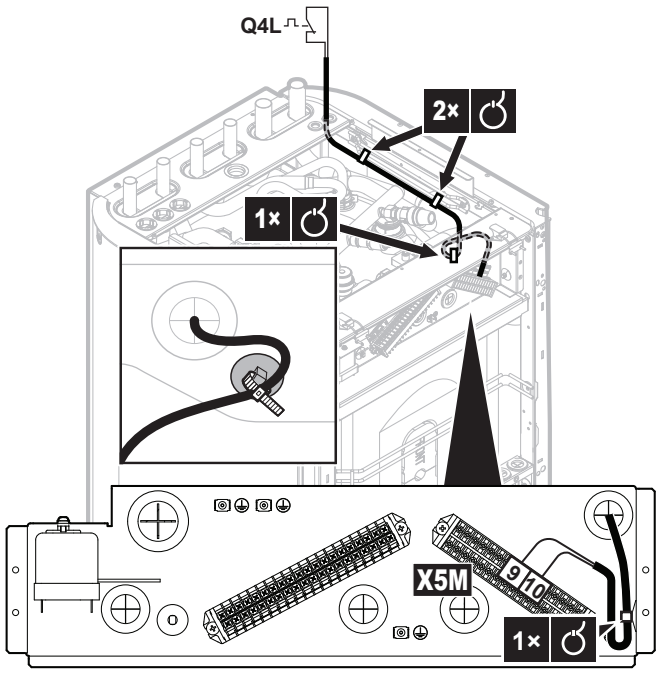

3 Fix the cable with cable ties to the cable tie mountings.

NOTICE

Make sure to select and install the safety thermostat according to the applicable legislation.

In any case, to prevent unnecessary tripping of the safety thermostat, we recommend the following:

- The safety thermostat is automatically resettable.
- The safety thermostat has a maximum temperature variation rate of 2°C/min.
- There is a minimum distance of 2 m between the safety thermostat and the 3-way valve.

INFORMATION

ALWAYS configure the safety thermostat after it is installed. Without configuration, the unit will ignore the safety thermostat contact.

INFORMATION

The preferential kWh rate power supply contact is connected to the same terminals (X5M/9+10) as the safety thermostat. Thus, the system can have EITHER preferential kWh rate power supply OR a safety thermostat.

9.2.11 To connect the brine low pressure switch

Depending on the applicable legislation, you might have to install a brine low pressure switch (field supply).

NOTICE

Mechanical. We recommend to use a mechanical brine low pressure switch. If an electrical brine low pressure switch is used, capacitive currents might disturb the flow switch operation causing an error on the unit.

NOTICE

Before disconnecting. If you want to remove or disconnect the brine low pressure switch, first set [C-0B]=0 (brine low pressure switch not installed). If not, this causes an error.

	Wires: 2×0.75 mm²
	Set overview field setting [C-0B]=1. ▪ If [C-0B]=0 (brine low pressure switch not installed), the unit does not check the input. ▪ If [C-0B]=1 (brine low pressure switch installed), the unit checks the input. If the input is "open", error EJ-01 occurs.

1 Open the following (see "7.2.2 To open the indoor unit" [▸ 62]):

1	Top panel
2	User interface panel
3	Installer switch box cover

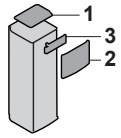

2 Connect the brine low pressure switch cable as shown in the illustration below.

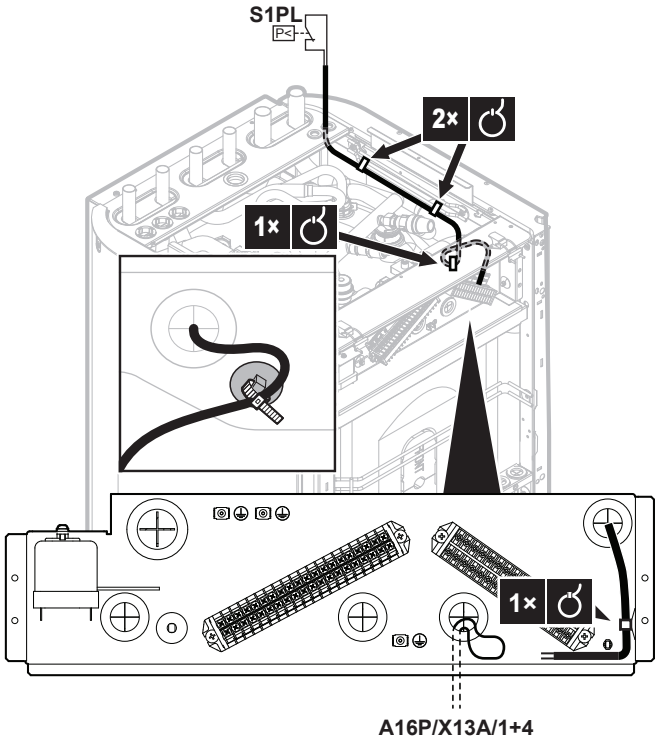

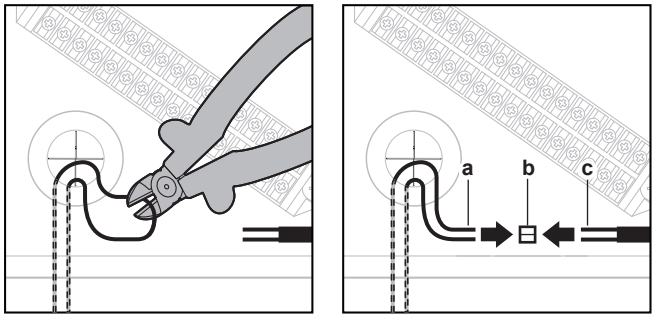

a Cut loop wires coming from A16P/X13A/1+4 (factory mounted)
b Splicing connectors (field supply)

c Wires from the brine low pressure switch cable (field supply)

3 Fix the cable with cable ties to the cable tie mountings.

9.2.12 To connect the thermostat for passive cooling

INFORMATION

Restriction: Passive cooling is only possible for:

- Heating only models
- Brine temperatures between 0 and 20°C

	Wires: 2×0.75 mm²
	—

1 Open the following (see "7.2.2 To open the indoor unit" [▶ 62]):

1	Top panel
2	User interface panel
3	Installer switch box cover

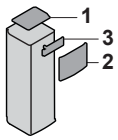

2 Connect the thermostat cable to the appropriate terminals as shown in the illustration below.

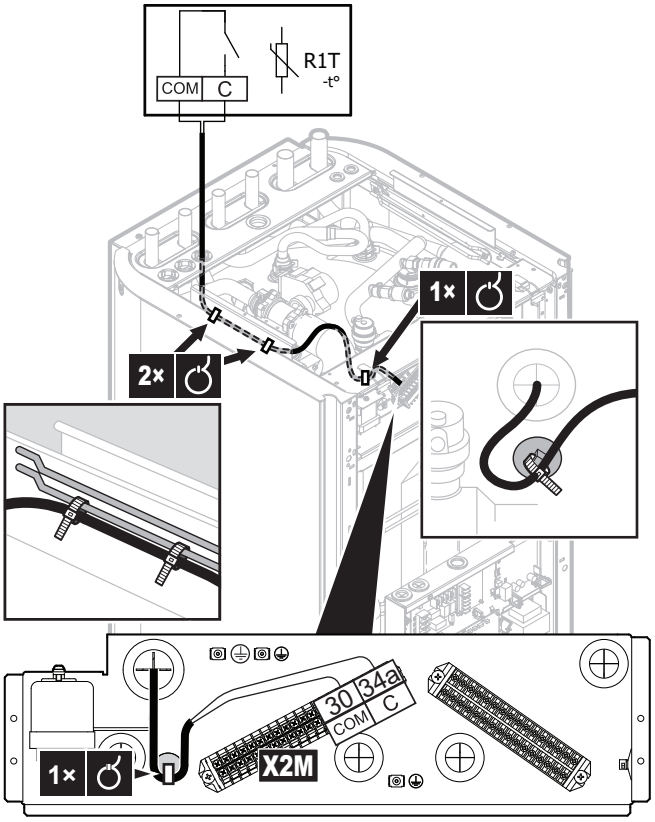

3 Fix the cable with cable ties to the cable tie mountings.

10 LAN adapter

In this chapter

10.1 About the LAN adapter ... 109
10.1.1 System layout ... 110
10.1.2 System requirements ... 112
10.1.3 On-site installation requirements ... 112
10.2 Connecting the electrical wiring ... 113
10.2.1 Overview of electrical connections ... 113
10.2.2 Router ... 115
10.2.3 Electricity meter ... 116
10.2.4 Solar inverter/energy management system ... 118
10.3 Starting up the system ... 121
10.4 Configuration – LAN adapter ... 121
10.4.1 Overview: Configuration ... 121
10.4.2 Configuring the adapter for app control ... 122
10.4.3 Configuring the adapter for the Smart Grid application ... 122
10.4.4 Updating software ... 122
10.4.5 Configuration web interface ... 123
10.4.6 System information ... 124
10.4.7 Factory reset ... 125
10.4.8 Network settings ... 126
10.5 Smart Grid application ... 128
10.5.1 Smart Grid settings ... 130
10.5.2 Operation modes ... 132
10.5.3 System requirements ... 133
10.6 Troubleshooting – LAN adapter ... 134
10.6.1 Overview: Troubleshooting ... 134
10.6.2 Solving problems based on symptoms – LAN adapter ... 134
10.6.3 Solving problems based on error codes – LAN adapter ... 135

10.1 About the LAN adapter

The indoor unit contains an integrated LAN adapter (model: BRP069A61), which allows for:

- App control of the heat pump system
- Integration of the heat pump system in a Smart Grid application

Components: PCB

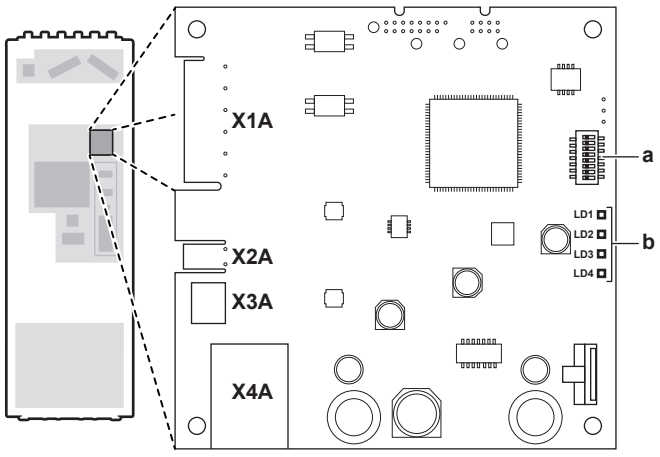

X1A~X4A Connectors
a DIP switch
b Status LEDs

Status LEDs

LED	Description	Behaviour
LD1 ♡	Indication of power to the adapter, and of normal operation.	▪ LED flashing: normal operation. ▪ LED NOT flashing: no operation.
LD2	Indication of TCP/IP communication with the router.	▪ LED ON: normal communication. ▪ LED flashing: communication problem.
LD3 **P1P2**	Indication of communication with the indoor unit.	▪ LED ON: normal communication. ▪ LED flashing: communication problem.
LD4	Indication of Smart Grid activity.	▪ LED ON: system running in the "Recommended ON", "Forced ON", or "Forced OFF" Smart Grid operation mode. ▪ LED OFF: system running in the "Normal operation" Smart Grid operation mode, or operating in normal operation conditions (space heating/cooling, production of domestic hot water). ▪ LED flashing: LAN adapter performing a Smart Grid compatibility check.

INFORMATION

- The DIP switch is used to configure the system. For more information, see "10.4 Configuration – LAN adapter" [▸ 121].
- When the LAN adapter performs a Smart Grid compatibility check, LD4 flashes. This is NOT erroneous behaviour. After a successful check, LD4 will either stay ON or go OFF. When it keeps flashing for more than 30 minutes, the compatibility check failed, and NO Smart Grid operation is possible.

10.1.1 System layout

Integrating the LAN adapter into the heat pump system allows for the following applications:

- App control (only)
- Smart Grid application (only)
- App control + Smart Grid application

App control (only)

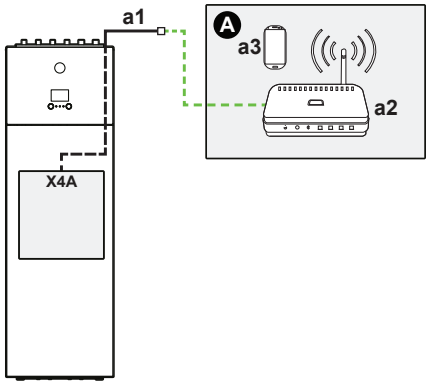

A See "10.2.2 Router" [▶ 115]
a1 Factory-mounted Ethernet cable
a2 Router
a3 Smartphone with app control

Smart Grid application (only)

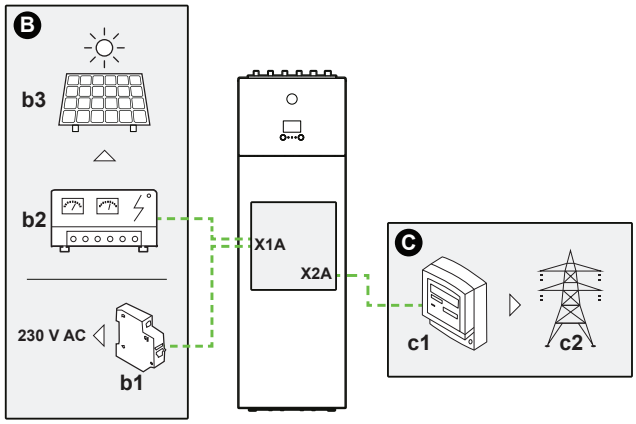

B See "10.2.4 Solar inverter/energy management system" [▶ 118]
b1 Circuit breaker
b2 Solar inverter/energy management system
b3 Solar panels
C See "10.2.3 Electricity meter" [▶ 116]
c1 Electricity meter
c2 Electrical grid

App control + Smart Grid application

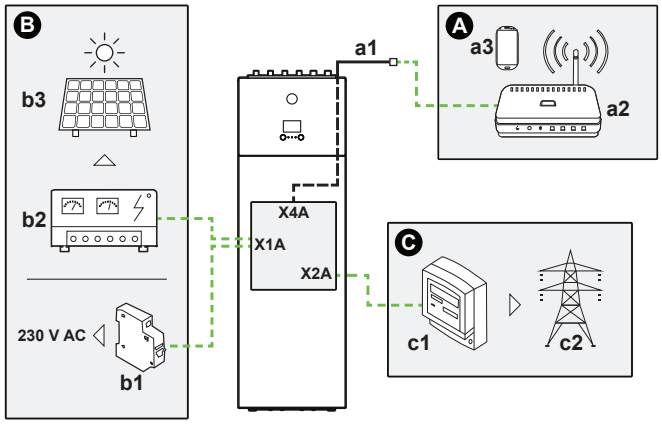

A See "10.2.2 Router" [▶ 115]
a1 Factory-mounted Ethernet cable
a2 Router
a3 Smartphone with app control
B See "10.2.4 Solar inverter/energy management system" [▶ 118]
b1 Circuit breaker

b2 Solar inverter/energy management system
b3 Solar panels
C See "10.2.3 Electricity meter" [▶ 116]
c1 Electricity meter
c2 Electrical grid

10.1.2 System requirements

The requirements posed on the heat pump system depend on the LAN adapter application/system layout.

App control

Item	Requirement
LAN adapter software	It is recommended to ALWAYS keep the LAN adapter software up-to-date.
Unit control method	On the user interface, make sure to set [2.9]=2 (`Control` = `Room thermostat`)

Smart Grid application

Item	Requirement
LAN adapter software	It is recommended to ALWAYS keep the LAN adapter software up-to-date.
Unit control method	On the user interface, make sure to set [2.9]=2 (`Control` = `Room thermostat`)
Domestic hot water settings	To allow for energy buffering in the domestic hot water tank, on the user interface, make sure to set [9.2.1]=4 (`Domestic hot water` = `Integrated`).
Power consumption control settings	On the user interface, make sure to set: ▪ [9.9.1]=1 (`Power consumption control` = `Continuous`) ▪ [9.9.2]=1 (`Type` = `kW`)

INFORMATION

For instructions on how to perform a software update, see "10.4.4 Updating software" [▶ 122].

10.1.3 On-site installation requirements

What you need on site to install the LAN adapter depends on the system layout.

BRP069A61		BRP069A62
Always		
PC/laptop with Ethernet connector		
Router (DHCP enabled)		
Smartphone with the ONECTA app		
Depending on the system layout		
IF connection to an electricity meter (X2A)	Electricity meter	—
	2-wire cable	—

BRP069A61		BRP069A62
IF connection to a solar inverter/energy management system (X1A)	2-wire cable	—
	Circuit breaker (100 mA~6 A, type B)	—

INFORMATION

- For an overview of the possible system layouts, see "10.1.1 System layout" [▶ 110]. For more information about the electrical wiring, see "10.2.1 Overview of electrical connections" [▶ 113].
- The function of the router in the system depends on the system layout. In case of app control (only), the router is a mandatory system component, required for the communication between heat pump system and smartphone. In case of Smart Grid application (only), the router is NOT a mandatory component, but only used for configuration purposes. In case of app control + Smart Grid application, you need the router both as a system component and for configuration purposes.
- The smartphone and ONECTA app are used to perform a LAN adapter software update (if required). Therefore, ALWAYS take a smartphone plus app to the installation site, also when the adapter is only used for the Smart Grid application.
- Some tools and components might already be available on site. Before going on site, find out which components are already at hand, and which ones you need to provide (e.g. router, electricity meter, ...).

10.2 Connecting the electrical wiring

10.2.1 Overview of electrical connections

Typical workflow

Connecting the electrical wiring typically consists of the following stages:

System layout	Typical workflow
App control (only)	Connecting the adapter to a router.
Smart Grid application (only)	▪ Connecting the adapter to a solar inverter/energy management system. ▪ Connecting the adapter to an electricity meter (optional). For more information about the Smart Grid application, see "10.5 Smart Grid application" [▶ 128].
App control + Smart Grid application	▪ Connecting the adapter to a router. ▪ Connecting the adapter to a solar inverter/energy management system, if required by the Smart Grid application. ▪ Connecting the adapter to an electricity meter, if required by the Smart Grid application (optional). For more information about the Smart Grid application, see "10.5 Smart Grid application" [▶ 128].

Wiring diagram

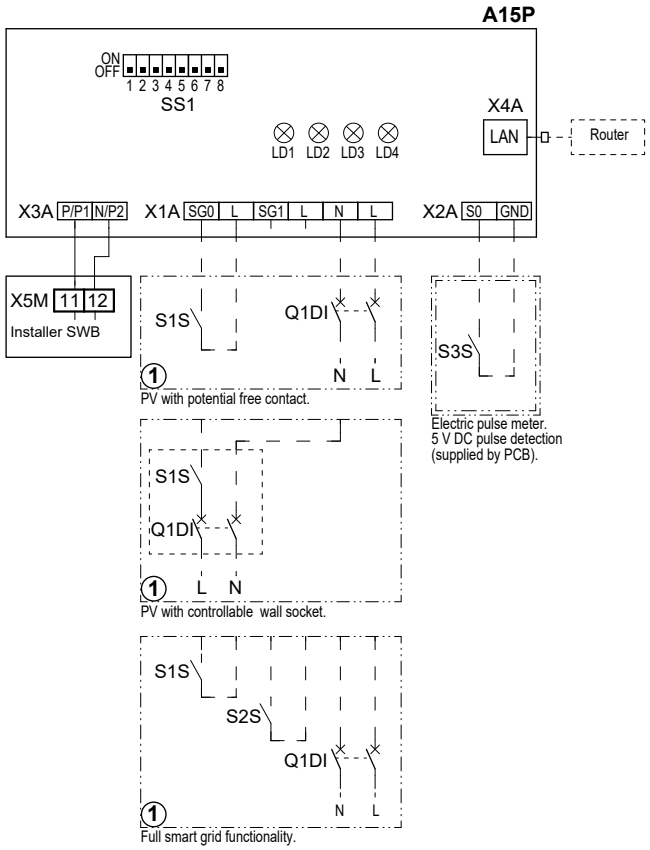

- - - - - - -		Field supply
①		Several wiring possibilities
		Option
		Wiring depending on model
A15P		LAN adapter PCB
LD1~LD4		PCB LED
Q1DI	#	Circuit breaker
SS1		DIP switch
S1S	#	SG0 contact
S2S	#	SG1 contact
S3S	*	Electrical pulse meter input
X*A		Connector
X5M		Field wiring terminal for DC

* Optional
\# Field supply

Connectors

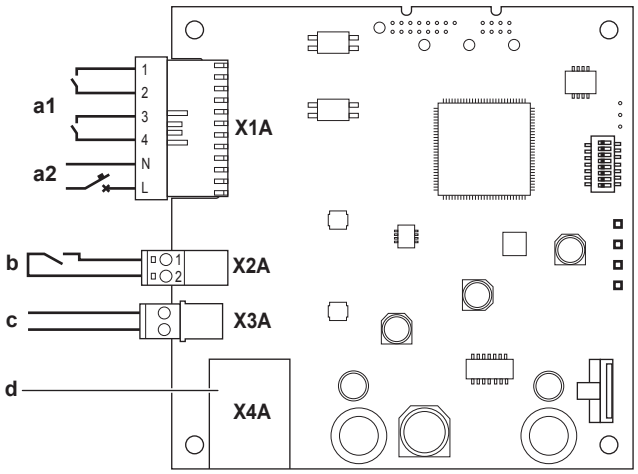

a1 To solar inverter/energy management system
a2 230 V AC detection voltage
b To electricity meter
c Factory-mounted cable to indoor unit (P1/P2)
d To router (via the factory-mounted Ethernet cable outside of the unit)

Connections

Field-supplied cables:

Connection	Cable section	Wires	Maximum cable length
Router (via the factory-mounted Ethernet cable outside of the unit, which is coming from X4A)	—	—	50/100 m[(a)]
Electricity meter (X2A)	0.75~1.25 mm^2	2[(b)]	100 m
Solar inverter/ energy management system + 230 V AC detection voltage (X1A)	0.75~1.5 mm^2	Depends on application[(c)]	100 m

[(a)] Ethernet cable: respect the maximum allowed distance between LAN adapter and router, which is 50 m in case of Cat5e cables, and 100 m in case of Cat6 cables.
[(b)] These wires MUST be sheathed. Recommended strip length: 6 mm.
[(c)] All wiring to X1A MUST be H05VV. Required strip length: 7 mm. For more information, see "10.2.4 Solar inverter/energy management system" [▸ 118].

10.2.2 Router

Make sure the LAN adapter can be connected via a LAN connection.

The minimum category for the Ethernet cable is Cat5e.

To connect the router

Use one of the following ways (A, B or C) to connect the router:

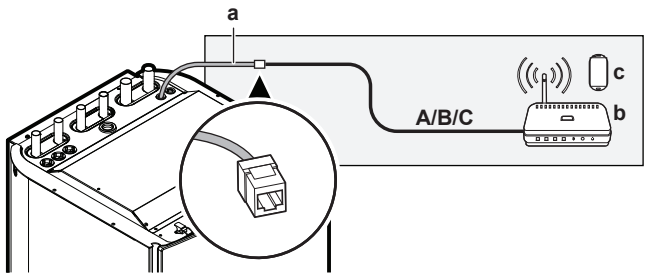

a Factory-mounted Ethernet cable
b Router (field supply)
c Smartphone with app control (field supply)

#	Router connection
A	**Wired** 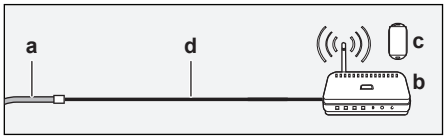 **d** Field-supplied Ethernet cable: ▪ Minimum category: Cat5e ▪ Maximum length: - 50 m in case of Cat5e cables - 100 m in case of Cat6 cables
B	**Wireless** 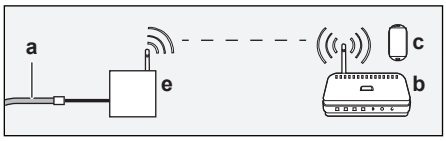 **e** Wireless bridge (field supply)
C	**Power line** 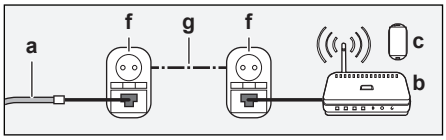 **f** Power line adapter (field supply) **g** Power line (field supply)

INFORMATION

It is recommended to connect the LAN adapter to the router directly. Depending on the wireless bridge or power line adapter model, the system might not function properly.

NOTICE

To prevent communication problems due to cable breakdown, do NOT exceed the minimum bend radius of the Ethernet cable.

10.2.3 Electricity meter

If the LAN adapter is connected to an electricity meter, make sure it is an **electrical pulse meter**.

Requirements:

Item		Specification
Type		Pulse meter (5 V DC pulse detection)
Possible number of pulses		▪ 100 pulse/kWh ▪ 1000 pulse/kWh
Pulse duration	Minimum On time	10 ms
	Minimum OFF time	100 ms
Measurement type		Depends on the installation: ▪ 1N~ AC meter ▪ 3N~ AC meter (balanced loads) ▪ 3N~ AC meter (unbalanced loads)

INFORMATION

It is required that the electricity meter has a pulse output that can measure the total energy injected INTO the grid.

Suggested electricity meters

Phase	ABB reference
1N~	2CMA100152R1000 B21 212-100
3N~	2CMA100166R1000 B23 212-100

To connect the electricity meter

NOTICE

To prevent damage to the PCB, it is NOT allowed to connect the electrical wiring with the connectors already connected to the PCB. First connect the wiring to the connectors, then connect the connectors to the PCB.

1 Open the following (see "7.2.2 To open the indoor unit" [▸ 62]):

1	Top panel
2	User interface panel
3	Front panel
4	Main switch box cover

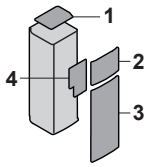

2 Connect the electricity meter to LAN adapter terminals X2A/1+2.

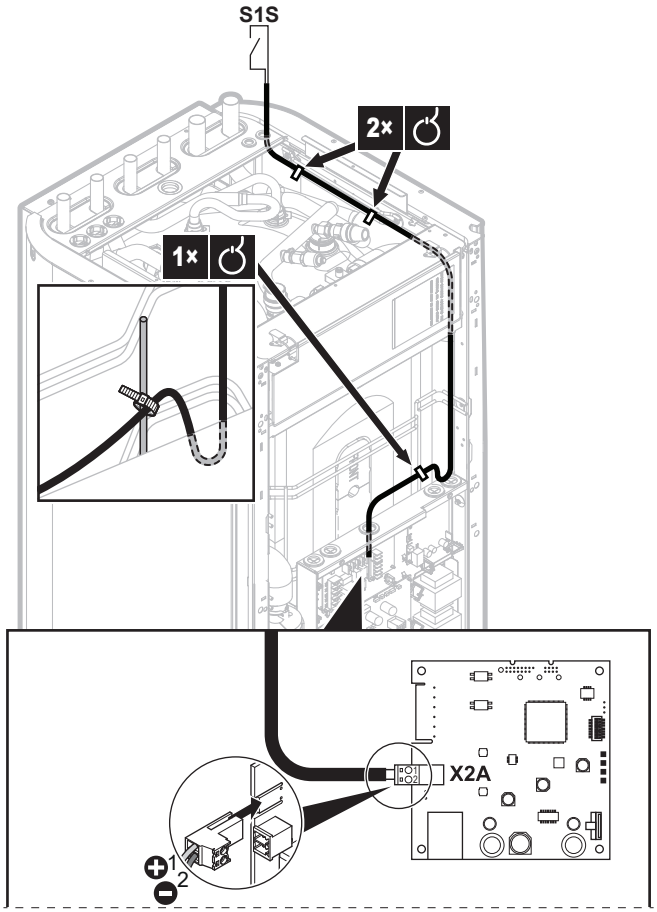

INFORMATION

Mind the polarity of the cable. The positive wire MUST be connected to X2A/1; the negative wire to X2A/2.

WARNING

Make sure to connect the electricity meter in the correct direction, so that it measures the total energy injected INTO the grid.

10.2.4 Solar inverter/energy management system

INFORMATION

Before installation, confirm that the solar inverter/energy management system is equipped with the digital outputs required to connect it to the LAN adapter. For more information, see "10.5 Smart Grid application" [▶ 128].

Connector X1A is for the connection of the LAN adapter to the digital outputs of a solar inverter/energy management system, and allows for the integration of the heat pump system in a Smart Grid application.

X1A/N+L supply a 230 V AC detection voltage to the input contact of X1A. The 230 V AC detection voltage enables the detection of the state (open or close) of the digital inputs and does NOT supply power to the rest of the LAN adapter PCB.

Make sure X1A/N+L are protected by a fast acting circuit breaker (rated current 100 mA~6 A, type B).

The rest of the wiring to X1A differs depending on the digital outputs available on the solar inverter/energy management system and/or on the Smart Grid operation modes that you want the system to run in. For more information, see "10.5 Smart Grid application" [▸ 128].

To connect the solar inverter/energy management system

NOTICE

To prevent damage to the PCB, it is NOT allowed to connect the electrical wiring with the connectors already connected to the PCB. First connect the wiring to the connectors, then connect the connectors to the PCB.

INFORMATION

How the solar inverter/energy management system is connected to X1A depends on the Smart Grid application. The connection described in the instructions below is for the system to run in the "Recommended ON" operation mode. For more information, see "10.5 Smart Grid application" [▸ 128].

WARNING

Make sure X1A/N+L are protected by a fast acting circuit breaker (rated current 100 mA~6 A, type B).

WARNING

When connecting the wiring to LAN adapter terminal X1A, make sure each wire is securely fastened to the appropriate terminal. Use a screwdriver to open the wire clamps. Make sure the bare copper wire is fully inserted into the terminal (bare copper wire CANNOT be visible).

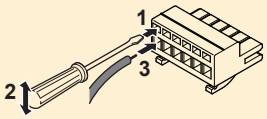

1 Open the following (see "7.2.2 To open the indoor unit" [▸ 62]):

1	Top panel
2	User interface panel
3	Front panel
4	Main switch box cover

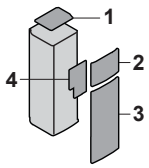

2 Provide a detection voltage to X1A/N+L. Make sure X1A/N+L are protected by a fast acting circuit breaker (100 mA~6 A, type B).

3 For the system to run in the "Recommended ON" operation mode (Smart Grid application), connect the digital outputs of the solar inverter/energy management system to LAN adapter digital inputs X1A/1+2 LAN.

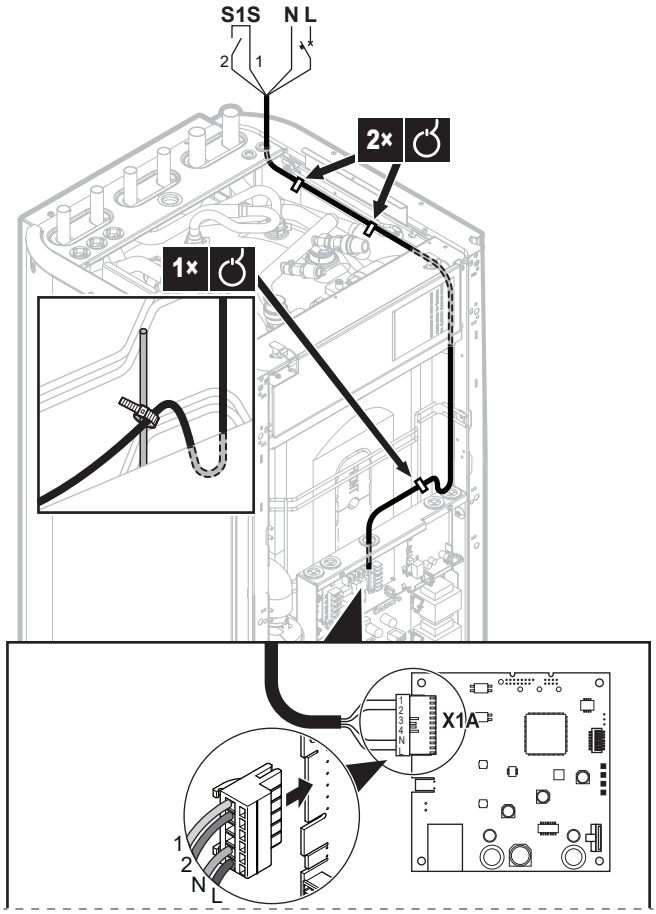

To connect to a voltage free contact (Smart Grid application)

If the solar inverter/energy management system has a voltage free contact, connect the LAN adapter as follows:

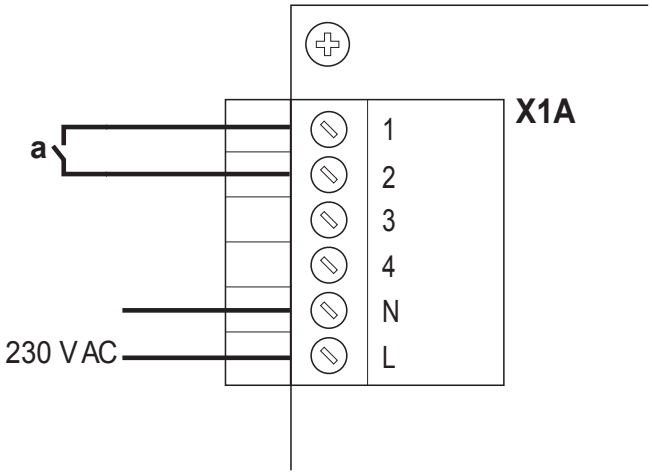

a To voltage free contact

INFORMATION

The voltage free contact should be able to switch 230 V AC – 20 mA.

To connect to a controllable wall socket (Smart Grid application)

If a wall socket is available that is controlled by the solar inverter/energy management system, connect the LAN adapter as follows:

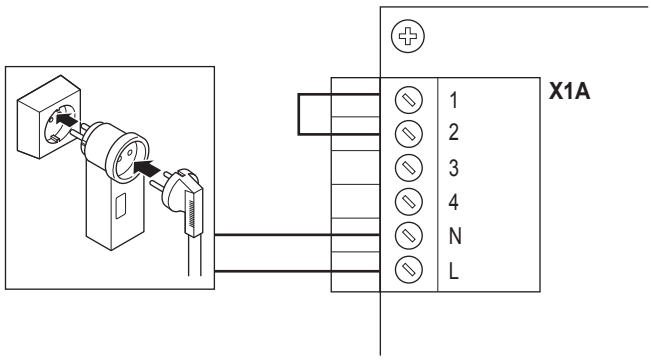

NOTICE

Make sure a fast acting fuse or circuit breaker is present in the setup (or as part of the wall socket, or install an external one (rated current 100 mA~6 A, type B)).

10.3 Starting up the system

The LAN adapter gets its power from the indoor unit. After powering on the system, it can take up to 30 minutes before the LAN adapter is operational, depending on the system layout.

10.4 Configuration – LAN adapter

10.4.1 Overview: Configuration

LAN adapter configuration depends on the LAN adapter application/system layout.

If	Then
The LAN adapter is used for app control	See "10.4.2 Configuring the adapter for app control" [▸ 122].
The LAN adapter is used for the Smart Grid application	See "10.4.3 Configuring the adapter for the Smart Grid application" [▸ 122].

Additionally, this chapter contains instructions for how to:

Topic	Chapter
Update software	"10.4.4 Updating software" [▸ 122]
Access the configuration web interface	"10.4.5 Configuration web interface" [▸ 123]
Consult system information	"10.4.6 System information" [▸ 124]
Perform a factory reset	"10.4.7 Factory reset" [▸ 125]
Configure network settings	"10.4.8 Network settings" [▸ 126]

INFORMATION

If 2 LAN adapters are present in the same LAN network, configure them separately.

10.4.2 Configuring the adapter for app control

When the LAN adapter is used for app control (only), there is hardly any configuration required. After correct installation and system start-up, all system components (LAN adapter, router, and ONECTA app) should be able to find each other automatically by way of their IP address.

If the system components fail to connect to each other automatically, you can connect them to each other manually by making use of a fixed IP address. In this case, provide LAN adapter, router, and ONECTA app with the same fixed IP address. For how to provide the LAN adapter with a fixed IP address, see "10.4.8 Network settings" [▸ 126].

10.4.3 Configuring the adapter for the Smart Grid application

When the LAN adapter is used for the Smart Grid application, configure the LAN adapter on the dedicated configuration web interface.

- For instructions on how to access the configuration web interface, see "10.4.5 Configuration web interface" [▸ 123].
- For an overview of Smart Grid settings, see "10.5.1 Smart Grid settings" [▸ 130].
- For more information on the Smart Grid application, see "10.5 Smart Grid application" [▸ 128].

If required, perform a software update. For instructions, see "10.4.4 Updating software" [▸ 122].

INFORMATION

For a good understanding of the Smart Grid application, and to be able to properly configure the LAN adapter, it is recommended to first read up on the Smart Grid application in "10.5 Smart Grid application" [▸ 128].

10.4.4 Updating software

To update LAN adapter software, use the ONECTA app.

INFORMATION

- To update LAN adapter software with the ONECTA app, you need a router. In case the LAN adapter is only used for the Smart Grid application (and a router is not part of the system), temporarily add a router to the setup according to "App control + Smart Grid application" [▸ 111].
- The ONECTA app will automatically check the LAN adapter software version and ask for an update, if required.

INFORMATION

For the indoor unit and user interface to function with the LAN adapter, it is required that their software meets requirements. ALWAYS make sure the unit and user interface have the latest software version. For more information, see https://my.daikin.eu/denv/en_US/home/applications/software-finder/service-software/unit-software/heating/MMI-software-daikin-altherma-LT.html.

To update adapter software

Prerequisite: A router is (temporarily) part of the layout, you have a smartphone with the ONECTA app, and the app notified you that new LAN adapter software is available.

1 Follow the update procedure in the app.

Result: The new software is automatically downloaded to the LAN adapter.

Result: To implement changes, the LAN adapter automatically performs a power reset.

Result: The LAN adapter software is now updated to the latest version.

INFORMATION

During the software update, the LAN adapter and the app CANNOT be operated. It is possible that the user interface of the indoor unit displays error U8-01. When the update is finished, this error code will disappear automatically.

10.4.5 Configuration web interface

On the configuration web interface you can make the following settings:

Section	Settings
Information	Consult various system parameters
Upload adapter SW	Perform a LAN adapter software update
Factory reset	Perform a LAN adapter factory reset
Network settings	Make various network settings (e.g. set a fixed IP address)
Smart Grid	Make settings related to the Smart Grid application

INFORMATION

The configuration web interface is available for 2 hours after powering on the LAN adapter. To make the configuration web interface available again after it has expired, the LAN adapter requires a power reset (power reset of the indoor unit). It is NOT required to reset the 230 V AC detection voltage.

Accessing the configuration web interface

Normally, you should be able to access the configuration web interface by browsing to its URL: http://altherma.local. If this does not work out, navigate to the configuration web interface by using the LAN adapter's IP address. The IP address depends on network configuration.

Access via URL

Prerequisite: Your computer is connected to the same router (same network) the LAN adapter is connected to.

Prerequisite: The router supports DHCP.

1 In your browser, go to http://altherma.local

Access via LAN adapter IP address

Prerequisite: Your computer is connected to the same router (same network) the LAN adapter is connected to.

Prerequisite: You have retrieved the IP address of the LAN adapter.

1 In your browser, go to the IP address of the LAN adapter.

To retrieve the IP address of the LAN adapter:

Retrieval via	Instruction
The ONECTA app	▪ In the home screen of the app, tap the pencil icon to go to the "Edit unit" screen. ▪ Under "Units", tap the unit that is connected to the LAN adapter of which you want to retrieve the IP address. ▪ In the "Manage unit" screen, find the LAN adapter IP address under "Network gateway information".
The DHCP client list of your router	Find the LAN adapter in the DHCP client list of the router.

Access via DIP switch + custom static IP address

Prerequisite: Your computer is directly connected to the LAN adapter with an Ethernet cable, and is NOT connected to any network (wifi, LAN, …).

Prerequisite: The power to the LAN adapter is OFF.

1 Set DIP switch 4 to "ON".

2 Turn ON the power to the LAN adapter.

3 In your browser, go to http://169.254.10.10.

NOTICE

Use appropriate tooling to set the DIP switches to another position. Beware of electrostatic discharge.

INFORMATION

The LAN adapter only checks the configuration of the DIP switch after a power reset. To configure the DIP switch, therefore make sure the power to the adapter is OFF.

INFORMATION

"Power" is both the power supplied by the indoor unit AND the 230 V AC detection voltage supplied to X1A.

10.4.6 System information

To consult system information, go to "Information" on the configuration web interface.

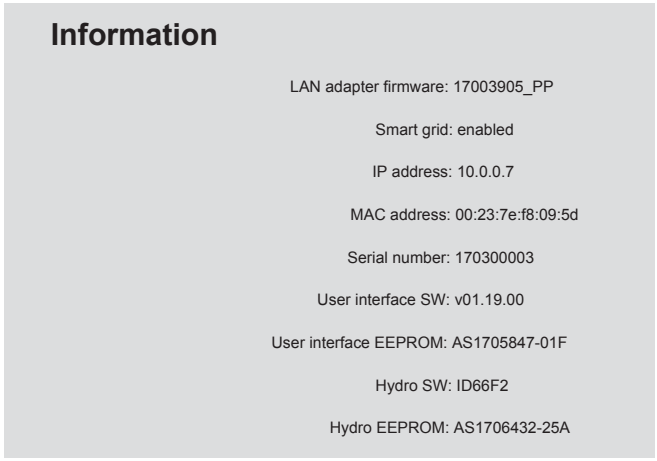

Information	Description/translation
LAN adapter	
LAN adapter firmware	LAN adapter software version
Smart grid	Check if the LAN adapter can be used for the Smart Grid application
IP address	LAN adapter IP address
MAC address	LAN adapter MAC address
Serial number	Serial number
User interface	
User interface SW	User interface software
User interface EEPROM	User interface EEPROM
Indoor unit	
Hydro SW	Indoor unit hydro module software version
Hydro EEPROM	Indoor unit hydro module EEPROM

10.4.7 Factory reset

Perform a factory reset as follows:

- Via the DIP switch (preferred method);
- Via the configuration web interface;
- Via the ONECTA app.

INFORMATION

Mind that when you perform a factory reset, ALL current settings and configuration will be reset. Use this function with care.

Performing a factory reset might be useful in the following cases:

- You can't find the LAN adapter (anymore) in the network;
- The LAN adapter lost its IP address;
- You want to reconfigure the Smart Grid application;
- ...

To perform a factory reset

Via the DIP switch (preferred method)

1 Turn OFF the power to the LAN adapter.
2 Set DIP switch 2 to "ON".
3 Turn ON the power.
4 Wait for 15 seconds.
5 Turn OFF the power.
6 Set the switch back to "OFF".
7 Turn ON the power.

NOTICE

Use appropriate tooling to set the DIP switches to another position. Beware of electrostatic discharge.

INFORMATION

The LAN adapter only checks the configuration of the DIP switch after a power reset. To configure the DIP switch, therefore make sure the power to the adapter is OFF.

INFORMATION

"Power" is both the power supplied by the indoor unit AND the 230 V AC detection voltage supplied to X1A.

Via the configuration web interface

1 Go to "Factory reset" on the configuration web interface.
2 Click the reset button.

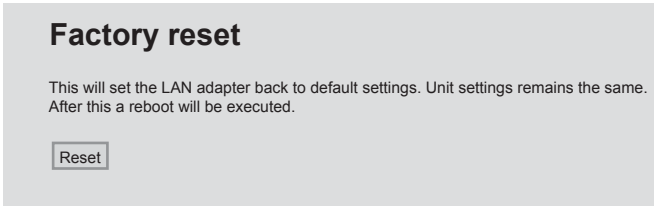

Information	Translation
This will set the LAN adapter back to default settings. Unit settings remains the same. After this a reboot will be executed.	This will reset the LAN adapter to default settings. Indoor unit settings remain the same. After the reset, a reboot is executed.

INFORMATION

For instructions on how to access the configuration web interface, see "Accessing the configuration web interface" [▸ 123].

Via the app

Open the ONECTA and perform a factory reset.

10.4.8 Network settings

Normally, the LAN adapter applies network settings automatically, and no changes to these are required. If required, however, it is possible to configure network settings as follows:

- Via the configuration web interface (various settings);
- Via the DIP switch (custom static IP address only).

Note on the LAN adapter IP address

Assign an IP address to the LAN adapter in one of the following ways:

IP address	Description + method
DHCP protocol (default)	The system automatically assigns the LAN adapter an IP address by way of the DHCP protocol. This is the default situation, and set on the configuration web interface. See "Via the configuration web interface" [▸ 127].
Static IP address	Bypass the DHCP protocol and manually assign a static IP address to the LAN adapter. Do this via the configuration web interface. See "Via the configuration web interface" [▸ 127].
Custom static IP address	Bypass any IP settings made on the configuration web interface and assign a custom static IP address to the LAN adapter. Do this via the DIP switch. See "Via the DIP switch" [▸ 128].

INFORMATION

Normally, network/IP settings are automatically applied and require no changes. Only make changes to the network/IP settings when absolutely required (e.g. when the system does not detect the LAN adapter automatically).

To configure network settings

Via the configuration web interface

1 Go to "Network settings" on the configuration web interface.

2 Configure network settings.

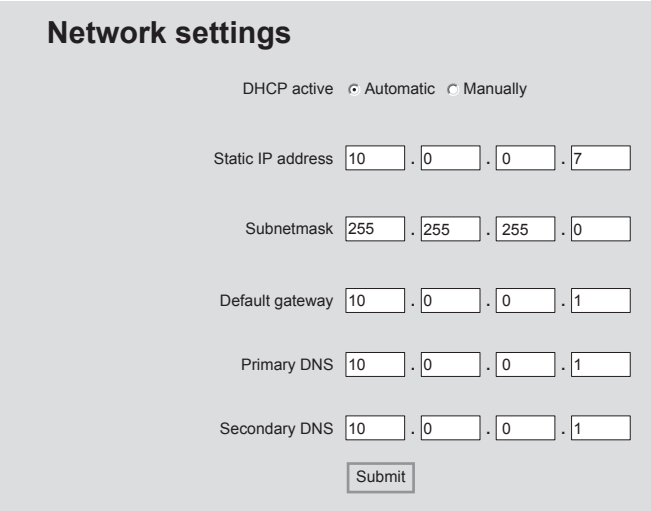

Information	Translation/description
DHCP active	DHCP active
Automatic	Automatic

Information	Translation/description
Manually	Manually
Static IP address	Static IP address
Subnet Mask	Subnetmask
Default gateway	Default gateway
Primary DNS	Primary DNS
Secondary DNS	Secondary DNS

INFORMATION

By default "DHCP active" is set to "Automatic" and IP settings are configured automatically and dynamically by way of the DHCP protocol. When setting "DHCP active" to "Manually", you bypass the DHCP protocol. Instead, define a static IP address for the LAN adapter in the fields next to "Static IP address".

When you set a static IP address for the LAN adapter, you make access to the configuration web interface via the URL (http://altherma.local) impossible. Therefore, when setting a static IP address, note it down somewhere, this for easy future access to the configuration web interface.

Via the DIP switch

The DIP switch allows you to assign a custom static IP address to the LAN adapter. This IP address is "**169.254.10.10**". When you choose to do this, you bypass any IP settings made on the configuration web interface.

To assign the custom static IP address to the LAN adapter:

1. Turn OFF the power to the LAN adapter.
2. Set DIP switch 2 to "ON".
3. Turn ON the power.

NOTICE

Use appropriate tooling to set the DIP switches to another position. Beware of electrostatic discharge.

INFORMATION

The LAN adapter only checks the configuration of the DIP switch after a power reset. To configure the DIP switch, therefore make sure the power to the adapter is OFF.

INFORMATION

"Power" is both the power supplied by the indoor unit AND the 230 V AC detection voltage supplied to X1A.

10.5 Smart Grid application

INFORMATION

To use the LAN adapter for the Smart Grid application, it is required that DIP switch 1 is set to "OFF" (default the case). Alternatively, to disable the possibility of using the LAN adapter for the Smart Grid application, it is possible to set DIP switch 1 to "ON".

NOTICE

Use appropriate tooling to set the DIP switches to another position. Beware of electrostatic discharge.

The LAN adapter allows for the connection of the heat pump system to a solar inverter/energy management system, and enables it to run in various Smart Grid operation modes. In this way, all system components work together to limit the injection of (self-generated) power into the grid, instead converting this power into thermal energy by making use of the thermal storage capacity of the heat pump. This is called "energy buffering".

The system can buffer energy in the following ways:

- Heat up the domestic hot water tank
- Heat up the room
- Cool down the room

The Smart Grid application is controlled by the solar inverter/energy management system, that monitors the grid, and sends commands to the LAN adapter. The adapter is connected to the solar inverter/energy management system (digital outputs) by way of connector X1A (digital inputs).

Solar inverter/energy management system (digital outputs)	X1A (digital inputs)
Digital output 1	SG0 (X1A/1+2)
Digital output 2	SG1 (X1A/3+4)

The solar inverter/energy management system controls the state of the digital inputs of the LAN adapter. Depending on the state of the inputs (open or closed), the heat pump system can run in the following Smart Grid operation modes:

Smart Grid operation mode	SG0 (X1A/1+2)	SG1 (X1A/3+4)
Normal operation/Free running NO Smart Grid application	Open	Open
Recommended ON Energy buffering in the domestic hot water tank and/or the room, WITH power limitation.	Closed	Open
Forced OFF Deactivation of unit and electrical heater operation in case of high energy tariffs.	Open	Closed
Forced ON Energy buffering in the domestic hot water tank and/or the room, WITHOUT power limitation.	Closed	Closed

INFORMATION

For the system to run in all 4 possible Smart Grid operation modes, the solar inverter/energy management system needs to have 2 digital outputs available. If only 1 output is available, then you can only connect to SG0, and the system can only run in the "Normal operation/Free running" and "Recommended ON" operation modes. For the system to run in "Forced OFF" and "Forced ON", a connection to SG1 is required (for those operation modes, SG1 needs to get "closed").

INFORMATION

In case the system layout includes a controllable wall socket, and the solar inverter/energy management system activates this socket, SG0 gets "closed" and the system runs in the "Recommended ON" operation mode. If the solar inverter/energy management system deactivates the socket, SG0 (and SG1) get "opened" and the system runs in the "Normal operation/Free running" operation mode (due to the 230 V C detection voltage to X1A/L+N getting cut off).

10.5.1 Smart Grid settings

To make changes to Smart Grid settings, go to Smart Grid on the configuration web interface.

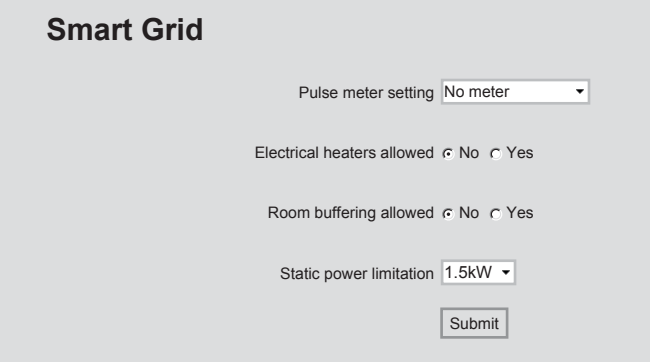

Information	Translation
Pulse meter setting	Pulse meter setting
No meter	No meter
Electrical heaters allowed - No/Yes	Electrical heaters allowed – No/Yes
Room buffering allowed - No/Yes	Room buffering allowed – No/Yes
Static power limitation	Static power limitation

INFORMATION

For instructions on how to access the configuration web interface, see "Accessing the configuration web interface" [▸ 123].

Energy buffering

Depending on Smart Grid settings (configuration web interface), energy buffering either happens in the domestic hot water tank only, or in the domestic hot water tank and in the room. You can choose whether or not to have the electrical heaters assist with the buffering of energy in the domestic hot water tank.

Energy buffering	System requirements	Description
Domestic hot water tank	On the user interface, make sure to set [9.1.3.3]=4 (`Domestic hot water` = `Integrated`).	The system produces domestic hot water. The tank heats up the water up to the maximum temperature.
Room (heating)	▪ Allow for buffering in the room on the configuration web interface. ▪ On the user interface, make sure to set [2.9]=2 (`Control` = `Room thermostat`).	The system heats up the room up to the comfort setpoint.
Room (cooling)	▪ Allow for buffering in the room on the configuration web interface. ▪ On the user interface, make sure to set [2.9]=2 (`Control` = `Room thermostat`).	The system cools down the room down to the comfort setpoint.

INFORMATION

- The system will ONLY buffer energy when the indoor unit is in standby mode. Normal operation (scheduled actions, etc.) has priority over energy buffering.
- On the configuration web interface, the buffering is default set to "domestic hot water tank only".
- The maximum temperature during domestic hot water tank buffering is the maximum tank temperature for the applicable tank type.
- The space heating/cooling setpoint during room buffering is the comfort setpoint for the room.
- The system will ONLY buffer energy during space heating if the space heating setpoint is lower than the heating comfort setpoint. The system will ONLY buffer energy during space cooling if the space cooling setpoint is higher than the cooling comfort setpoint.

Power limitation

In the "Recommended ON" operation mode, the power consumption of the heat pump system is limited either statically or dynamically. In both cases, it is possible to include the power consumption of the electrical heaters in the calculation (default NOT the case).

IF	THEN
Static power limitation (Static power limitation)	The power consumption of the indoor unit is limited statically based on a fixed value (default 1.5 kW) that is set in the configuration web interface. During energy buffering, the power consumption of the indoor unit will NOT exceed this limit. The value for this setting is only used if the system does not include an electricity meter (on the configuration web interface: Pulse meter setting: "No meter"). Otherwise, make use of dynamic power limitation.
Dynamic power limitation (Pulse meter setting)	The power limitation is auto-adaptive, and dynamically performed based on the power injection into the grid, measured by the electricity meter. To minimise the power injection into the grid, the indoor unit operates as much as possible.

INFORMATION

- In the "Forced ON" operation mode, energy buffering happens WITHOUT power limitation.
- To get the most out of the energy buffering it is recommended to make use of dynamic power limitation by way of an electricity meter.
- The electrical heaters will ONLY operate when the power limitation is higher than the power rating of the heaters.

WARNING

Make sure to connect the electricity meter in the correct direction, so that it measures the total energy injected INTO the grid.

INFORMATION

- For dynamic power limitation to be possible, a single connection point to the grid is required (one connection point for the photovoltaic system AND the domestic appliances). To function properly, the Smart Grid algorithm requires the net sum of generated AND consumed energy. The algorithm will NOT work when there are separate meters for generated energy and consumed energy.
- Since dynamic power limitation is performed based on electricity meter input, you do NOT have to set the power limitation value in the configuration web interface.

10.5.2 Operation modes

"Normal operation/Free running" mode

In the "Normal operation"/"Free running" operation mode, the indoor unit operates as normal, according to its owner's settings and schedules. No Smart Grid functionalities are enabled.

"Recommended ON" mode

In the "Recommended ON" operation mode, the heat pump system makes use of solar/grid power (when it is available, as measured by the solar inverter/energy management system) to produce domestic hot water and/or heat up or cool down the space. The amount of solar/grid power that is used for buffering depends on the domestic hot water tank and/or the room temperature. To align solar/grid capacity and the power consumption by the heat pump system, the power consumption of the indoor unit is limited either statically (by a fixed value set in the configuration web interface) or dynamically (auto-adaptively, as measured by the electricity meter – if part of the system layout).

"Forced OFF" mode

In the "Forced OFF" operation mode, the solar inverter/energy management system triggers the system to deactivate the operation of the unit's compressor and the electrical heaters. This is especially useful in case of energy management systems that react to high energy tariffs, or in case of grid overload (signaled by the energy distributor to the energy management system). Once active, "Forced OFF" mode will cause the system to stop space heating/cooling, as well as domestic hot water production.

INFORMATION

Once running in one of the Smart Grid operation modes, the system will keep running in that mode until the input state of the LAN adapter is changed. Beware that if the system runs in "Forced OFF" mode for a long time, comfort issues can occur.

"Forced ON" mode

In the "Forced ON" operation mode, the heat pump system makes use of solar/grid power (when it is available, as measured by the solar inverter/energy management system) to produce domestic hot water and/or heat up or cool down the space. The amount of solar/grid power that is used for buffering depends on the domestic hot water tank and/or the room temperature. In contrast to the "Recommended ON" operation mode, there is NO power limitation: the system selects the comfort setpoint for space heating/cooling, and will heat up the domestic hot water tank to the maximum temperature. The unit's compressor and the electrical heaters are not limited in their power consumption.

The "Forced ON" operation mode is particularly useful in case of energy management systems that react to low energy tariffs, in case of grid overload (signaled by the energy distributor to the energy management system), or when multiple houses are connected to the grid that are controlled simultaneously, this to stabilise the grid.

INFORMATION

Once running in one of the Smart Grid operation modes, the system will keep running in that mode until the input state of the LAN adapter is changed.

10.5.3 System requirements

The Smart Grid application poses the following requirements to the heat pump system:

Item	Requirement
LAN adapter software	It is recommended to ALWAYS keep the LAN adapter software up-to-date.
Unit control method	On the user interface, make sure to set [2.9]=2 (`Control` = `Room thermostat`)
Domestic hot water settings	To allow for energy buffering in the domestic hot water tank, on the user interface, make sure to set [9.2.1]=4 (`Domestic hot water` = `Integrated`).
Power consumption control settings	On the user interface, make sure to set: ▪ [9.9.1]=1 (`Power consumption control` = `Continuous`) ▪ [9.9.2]=1 (`Type` = `kW`)

10.6 Troubleshooting – LAN adapter

10.6.1 Overview: Troubleshooting

This chapter describes what to do in case of problems.

It contains information about:

- Solving problems based on symptoms
- Solving problems based on error codes

10.6.2 Solving problems based on symptoms – LAN adapter

Symptom: Cannot access the web page

Possible causes	Corrective action
The LAN adapter is not powered (heartbeat LED not blinking).	Make sure that the LAN adapter is correctly connected to the indoor unit, and that the power of all connected equipment is turned ON.
The configuration web interface is ONLY available for 2 hours after every power reset. Its timer can have run out.	Perform a power reset on the LAN adapter.
The LAN adapter is NOT connected to the network (network connection LED NOT blinking).	Connect the LAN adapter to a router.
The LAN adapter is NOT connected to the router or the router does NOT support DHCP.	Connect the LAN adapter to a router that supports DHCP.
The computer is NOT connected to the same router as the LAN adapter.	Connect the computer to the same router as the LAN adapter.

INFORMATION

If none of the corrective actions work, try performing a power reset of the total system.

Symptom: The app does not find the LAN adapter

In the rare case that the ONECTA app does not find the LAN adapter automatically, connect router, LAN adapter, and app manually by way of a fixed IP address.

1. In the router, check the IP address that is currently assigned to the LAN adapter.
2. Access the configuration web interface with this IP address.
3. On the configuration web interface, set "DHCP active" to "Manually".
4. In the router, assign a static IP address to the LAN adapter.
5. On the configuration web interface, in the fields next to "Static IP address", set the same static IP address.
6. In the ONECTA app (Settings menu), assign the same IP address to the LAN adapter.
7. Reset the power to the LAN adapter.

Result: Router, LAN adapter, and ONECTA app share the same fixed IP address and should be able to find each other.

10.6.3 Solving problems based on error codes – LAN adapter

Error codes of the indoor unit

If the indoor unit loses its connection with the LAN adapter, the following error code appears on the user interface:

Error code	Description
U8-01	`Connection with LAN adapter lost`

Error codes of the adapter

LAN adapter errors are indicated by the status LEDs. There is a problem if one or more status LEDs have the following behaviour:

LED	Error behavior	Description
♡	Heartbeat LED NOT blinking	No normal operation. Try resetting the LAN adapter or contact your dealer.
品	Network LED flashing	Communication problem. Check the network connection.
P1P2	Indoor unit communication LED flashing	Communication problem with the indoor unit.
⟳	Smart Grid LED flashing for more than 30 minutes.	Smart Grid compatibility problem. Try resetting the LAN adapter or contact your dealer.

INFORMATION

- The DIP switch is used to configure the system. For more information, see "10.4 Configuration – LAN adapter" [▸ 121].
- When the LAN adapter performs a Smart Grid compatibility check, LD4 flashes. This is NOT erroneous behaviour. After a successful check, LD4 will either stay ON or go OFF. When it keeps flashing for more than 30 minutes, the compatibility check failed, and NO Smart Grid operation is possible.

For a complete description of the status LEDs, check "10.1 About the LAN adapter" [▸ 109].

11 Configuration

In this chapter

11.1 Overview: Configuration ... 137
11.1.1 To access the most used commands ... 138
11.1.2 To connect the PC cable to the switch box ... 140
11.2 Configuration wizard ... 140
11.3 Possible screens ... 142
11.3.1 Possible screens: Overview ... 142
11.3.2 Home screen ... 142
11.3.3 Main menu screen ... 145
11.3.4 Menu screen ... 146
11.3.5 Setpoint screen ... 146
11.3.6 Detailed screen with values ... 147
11.3.7 Schedule screen: Example ... 147
11.4 Weather-dependent curve ... 151
11.4.1 What is a weather-dependent curve? ... 151
11.4.2 2-points curve ... 152
11.4.3 Slope-offset curve ... 153
11.4.4 Using weather-dependent curves ... 154
11.5 Settings menu ... 156
11.5.1 Malfunctioning ... 156
11.5.2 Room ... 157
11.5.3 Main zone ... 160
11.5.4 Additional zone ... 167
11.5.5 Space heating/cooling ... 172
11.5.6 Tank ... 180
11.5.7 User settings ... 188
11.5.8 Information ... 191
11.5.9 Installer settings ... 192
11.5.10 Operation ... 208
11.6 Menu structure: Overview user settings ... 209
11.7 Menu structure: Overview installer settings ... 210

11.1 Overview: Configuration

This chapter describes what you have to do and know to configure the system after it is installed.

Why

If you do NOT configure the system correctly, it might NOT work as expected. The configuration influences the following:

- The calculations of the software
- What you can see on and do with the user interface

How

You can configure the system via the user interface.

- **First time – Configuration wizard.** When you turn ON the user interface for the first time (via the unit), the configuration wizard starts to help you configure the system.
- **Restart the configuration wizard.** If the system is already configured, you can restart the configuration wizard. To restart the configuration wizard, go to `Installer settings` > `Configuration wizard`. To access `Installer settings`, see "11.1.1 To access the most used commands" [▸ 138].
- **Afterwards.** If necessary, you can make changes to the configuration in the menu structure or the overview settings.

INFORMATION

When the configuration wizard is finished, the user interface will show an overview screen and request to confirm. When confirmed, the system will restart and the home screen will be displayed.

Accessing settings – Legend for tables

You can access the installer settings using two different methods. However, NOT all settings are accessible via both methods. If so, the corresponding table columns in this chapter are set to N/A (not applicable).

Method	Column in tables
Accessing settings via the breadcrumb in the **home menu screen** or the **menu structure**. To enable breadcrumbs, press the **?** button in the home screen.	**#** For example: [2.9]
Accessing settings via the code in the **overview field settings**.	**Code** For example: [C-07]

See also:

- "To access the installer settings" [▸ 139]
- "11.7 Menu structure: Overview installer settings" [▸ 210]

11.1.1 To access the most used commands

To change the user permission level

You can change the user permission level as follows:

1	Go to [B]: `User profile`. 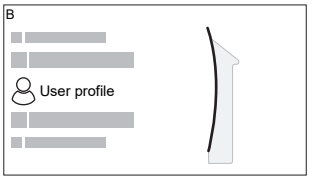	
2	Enter the applicable pin code for the user permission level.	—
	▪ Browse through the list of digits and change the selected digit.	
	▪ Move the cursor from left to right.	
	▪ Confirm the pin code and proceed.	

Installer pin code

The `Installer` pin code is **5678**. Additional menu items and installer settings are now available.



Advanced user pin code

The `Advanced user` pin code is **1234**. Additional menu items for the user are now visible.

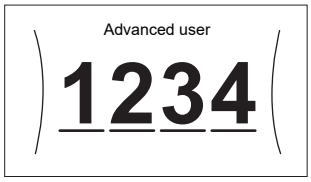

User pin code

The `User` pin code is **0000**.

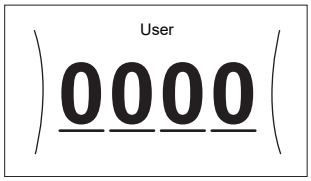

To access the installer settings

1. Set the user permission level to `Installer`.
2. Go to [9]: `Installer settings`.

To modify an overview setting

Example: Modify [1-01] from 15 to 20.

Most settings can be configured via the menu structure. If for any reason it is required to change a setting using the overview settings, then the overview settings can be accessed as follows:

1	Set the user permission level to `Installer`. See "To change the user permission level" [▶ 138].	—
2	Go to [9.I]: `Installer settings` > `Overview field settings`.	
3	Turn the left dial to select the first part of the setting and confirm by pressing the dial. 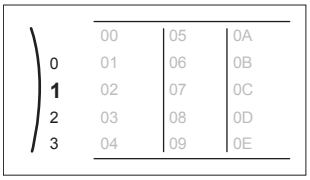	
4	Turn the left dial to select the second part of the setting 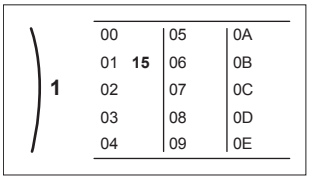	
5	Turn the right dial to modify the value from 15 to 20. 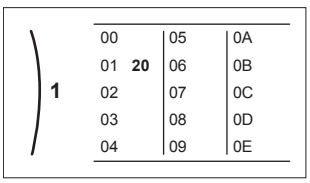	
6	Press the left dial to confirm the new setting.	
7	Press the center button to go back to the home screen.	

INFORMATION

When you change the overview settings and you go back to the home screen, the user interface will show a popup screen and request to restart the system.

When confirmed, the system will restart and recent changes will be applied.

11.1.2 To connect the PC cable to the switch box

Prerequisite: The EKPCCAB4 kit is required.

1. Connect the USB connector of the cable to your PC.
2. Connect the plug of the cable to X10A on A1P of the switch box of the indoor unit.

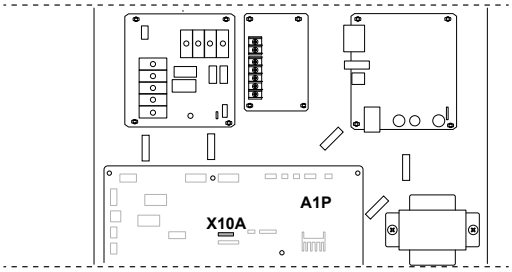

3. Pay special attention to the position of the plug!

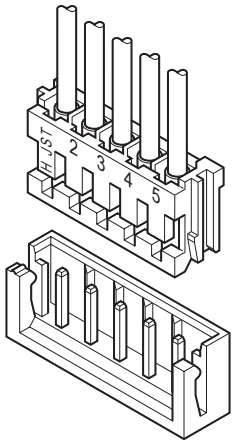

11.2 Configuration wizard

After first power ON of the system, the user interface starts a configuration wizard. Use this wizard to set the most important initial settings for the unit to run properly. If required, you can afterwards configure more settings. You can change all these settings via the menu structure.

You can find a short overview of the settings in the configuration here. All the settings can also be adjusted in the settings menu (use the breadcrumbs).

For the setting...	Refer to...
Language [7.1]	
Time/date [7.2]	

For the setting...		Refer to...
	Hours	—
	Minutes	
	Year	
	Month	
	Day	
System		
	Indoor unit type (read only)	"11.5.9 Installer settings" [▶ 192]
	Backup heater type (read only)	
	Domestic hot water [9.2.1]	
	Emergency [9.5.1]	
	Number of zones [4.4]	"11.5.5 Space heating/ cooling" [▶ 172]
Backup heater		
	Voltage [9.3.2]	"Backup heater" [▶ 193]
	Maximum capacity [9.3.9]	
Main zone		
	Emitter type [2.7]	"11.5.3 Main zone" [▶ 160]
	Control [2.9]	
	Setpoint mode [2.4]	
	Heating WD curve [2.5] (if applicable)	
	Cooling WD curve [2.6] (if applicable)	
	Schedule [2.1]	
	WD curve type [2.E]	
Additional zone (only if [4.4]=1)		
	Emitter type [3.7]	"11.5.4 Additional zone" [▶ 167]
	Control (read only) [3.9]	
	Setpoint mode [3.4]	
	Heating WD curve [3.5] (if applicable)	
	Cooling WD curve [3.6] (if applicable)	
	Schedule [3.1]	
	WD curve type [3.C]	
Tank		

	For the setting...	Refer to...
	`Heat up mode` [5.6]	"11.5.6 Tank" [▶ 180]
	`Comfort setpoint` [5.2]	
	`Eco setpoint` [5.3]	
	`Reheat setpoint` [5.4]	
	`Hysteresis` [5.9] and [5.A]	

11.3 Possible screens

11.3.1 Possible screens: Overview

The most common screens are as follows:

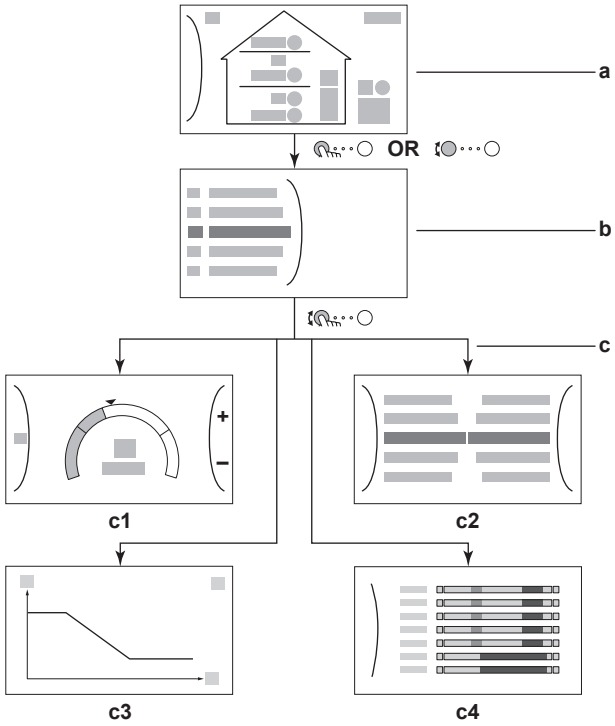

a Home screen
b Main menu screen
c Lower level screens:
c1: Setpoint screen
c2: Detailed screen with values
c3: Screen with weather-dependent curve
c4: Screen with schedule

11.3.2 Home screen

Press the ⌂ button to go back to the home screen. You see an overview of the unit configuration and the room and setpoint temperatures. Only symbols applicable for your configuration are visible on the home screen.

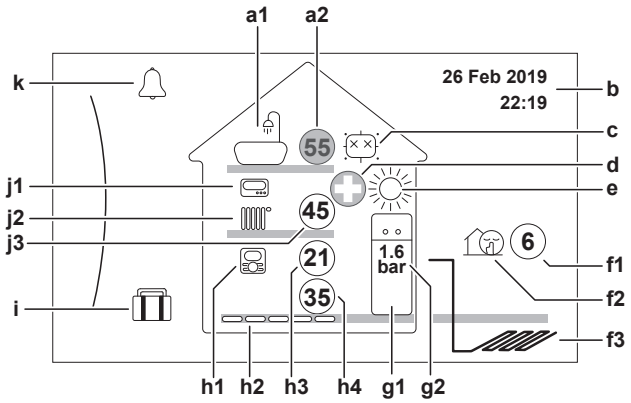

Possible actions on this screen	
⋯○	Go through the list of the main menu.
⋯○	Go to the main menu screen.
?	Enable/disable breadcrumbs.

Item			Description
a	**Domestic hot water**		
	a1		Domestic hot water
	a2	55	Measured tank temperature(1)
b	**Current date and time**		
c	**Disinfection / Powerful**		
			Disinfection mode active
			Powerful operation mode active
d	**Emergency**		
			Heat pump failure and system operates in `Emergency` mode or heat pump is forced off.
e	**Space operation mode**		
			Cooling
			Heating
f	**Outdoor / quiet mode**		
	f1	6	Measured outdoor temperature(1)
	f2		Quiet mode active
	f3		Outdoor brine piping
g	**Indoor unit / domestic hot water tank**		
	g1		Floor-standing indoor unit with integrated tank
	g2	1.6 bar	Water pressure

Item			Description
h	**Main zone**		
	h1	Installed room thermostat type:	
			Unit operation is decided based on the ambient temperature of the dedicated Human Comfort Interface (BRC1HHDA used as room thermostat).
			Unit operation is decided by the external room thermostat (wired or wireless).
		—	No room thermostat installed or set. Unit operation is decided based on the leaving water temperature regardless of the actual room temperature and/or heating demand of the room.
	h2	Installed heat emitter type:	
			`Underfloor heating`
			`Fancoil unit`
			`Radiator`
	h3		Measured room temperature(1)
	h4		Leaving water temperature setpoint(1)
i	**Holiday mode**		
			Holiday mode active
j	**Additional zone**		
	j1	Installed room thermostat type:	
			Unit operation is decided by the external room thermostat (wired or wireless).
		—	No room thermostat installed or set. Unit operation is decided based on the leaving water temperature regardless of the actual room temperature and/or heating demand of the room.
	j2	Installed heat emitter type:	
			`Underfloor heating`
			`Fancoil unit`
			`Radiator`
	j3		Leaving water temperature setpoint(1)
k	**Malfunction**		
			A malfunction occurred.
			See "15.4.1 To display the help text in case of a malfunction" [▸ 234] for more information.

(1) If the corresponding operation (for example: space heating) is not active, the circle is greyed out.

11.3.3 Main menu screen

Starting from the home screen, press ( ) or turn ( ) the left dial to open the main menu screen. From the main menu, you can access the different setpoint screens and submenus.

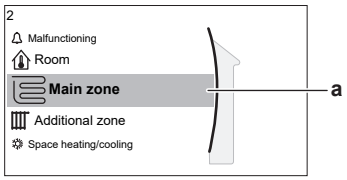

a Selected submenu

Possible actions on this screen	
	Go through the list.
	Enter the submenu.
?	Enable/disable breadcrumbs.

Submenu		Description
[0]	or Malfunctioning	**Restriction:** Only displayed if a malfunction occurs. See "15.4.1 To display the help text in case of a malfunction" [▶ 234] for more information.
[1]	Room	**Restriction:** Only displayed if a dedicated Human Comfort Interface (BRC1HHDA used as room thermostat) is controlling the indoor unit. Set the room temperature.
[2]	Main zone	Shows the applicable symbol for your main zone emitter type. Set the leaving water temperature for the main zone.
[3]	Additional zone	**Restriction:** Only displayed if there are two leaving water temperature zones. Shows the applicable symbol for your additional zone emitter type. Set the leaving water temperature for the additional zone (if present).
[4]	Space heating/ cooling	Shows the applicable symbol of your unit. Put the unit in heating mode or cooling mode. You cannot change the mode on heating only models.
[5]	Tank	Set the domestic hot water tank temperature.
[7]	User settings	Gives access to user settings such as holiday mode and quiet mode.
[8]	Information	Displays data and information about the indoor unit.
[9]	Installer settings	**Restriction:** Only for the installer. Gives access to advanced settings.

Submenu		Description
[A]	Commissioning	**Restriction:** Only for the installer. Perform tests and maintenance.
[B]	User profile	Change the active user profile.
[C]	Operation	Turn heating/cooling functionality and domestic hot water preparation on or off.

11.3.4 Menu screen



Example:

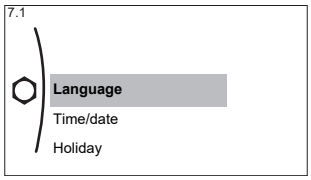

Possible actions on this screen	
	Go through the list.
	Enter the submenu/setting.

11.3.5 Setpoint screen

The setpoint screen is displayed for screens describing system components that need a setpoint value.

Examples

[1] Room temperature screen

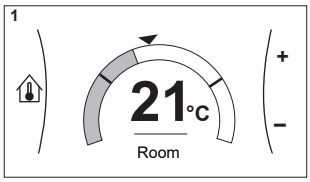

[2] Main zone screen

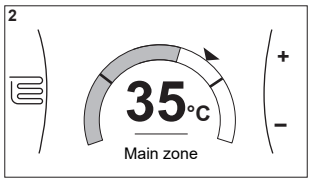

[3] Additional zone screen

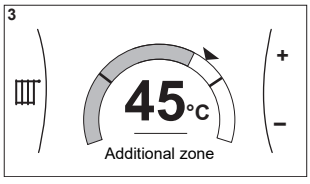

[5] Tank temperature screen

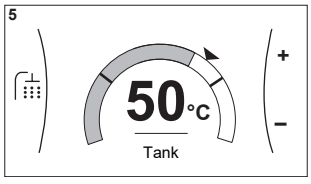

Explanation

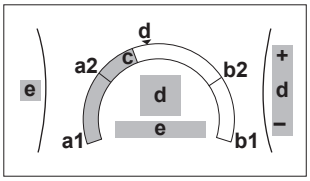

Possible actions on this screen	
	Go through the list of the submenu.
	Go to the submenu.

Possible actions on this screen	
○···◉	Adjust and automatically apply the desired temperature.

Item	Description	
Minimum temperature limit	**a1**	Fixed by the unit
	a2	Restricted by the installer
Maximum temperature limit	**b1**	Fixed by the unit
	b2	Restricted by the installer
Current temperature	**c**	Measured by the unit
Desired temperature	**d**	Turn the right dial to increase/ decrease.
Submenu	**e**	Turn or press the left dial to go to the submenu.

11.3.6 Detailed screen with values

Example:

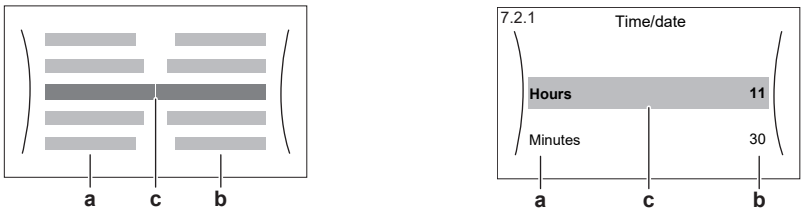

a Settings
b Values
c Selected setting and value

Possible actions on this screen	
◉···○	Go through the list of settings.
○···◉	Change the value.
○···↷	Go to the next setting.
↷···○	Confirm changes and proceed.

11.3.7 Schedule screen: Example

This example shows how to set a room temperature schedule in heating mode for the main zone.

INFORMATION

The procedures to program other schedules are similar.

To program the schedule: overview

Example: You want to program the following schedule:

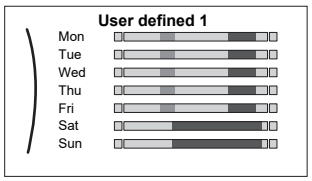

Prerequisite: The room temperature schedule is only available if room thermostat control is active. If leaving water temperature control is active, you can program the main zone schedule instead.

1 Go to the schedule.
2 (optional) Clear the content of the whole week schedule or the content of a selected day schedule.
3 Program the schedule for `Monday`.
4 Copy the schedule to the other weekdays.
5 Program the schedule for `Saturday` and copy it to `Sunday`.
6 Give the schedule a name.

To go to the schedule

1	Go to [1.1]: `Room` > `Schedule`.	
2	Set scheduling to `Yes`.	
3	Go to [1.2]: `Room` > `Heating schedule`.	

To clear the content of the week schedule

1	Select the name of the current schedule. 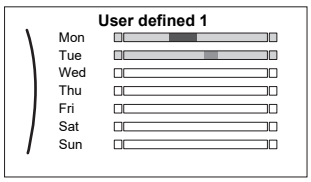	
2	Select `Delete`. 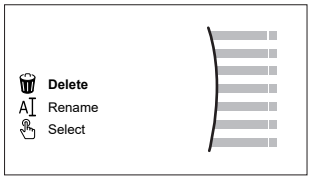	
3	Select `OK` to confirm.	

To clear the content of a day schedule

1	Select the day of which you want to clear the content. For example `Friday` 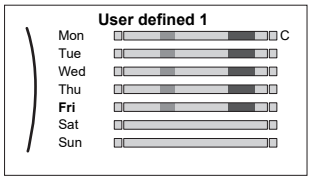	
2	Select `Delete`. 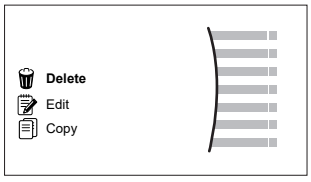	
3	Select `OK` to confirm.	

To program the schedule for Monday

1	Select **Monday**. 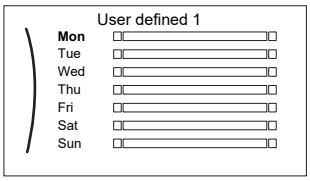	
2	Select **Edit**. 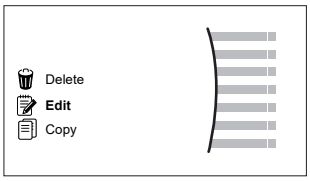	
3	Use the left dial to select an entry and edit the entry with the right dial. You can program up to 6 actions each day. On the bar, a high temperature has a darker colour than a low temperature. 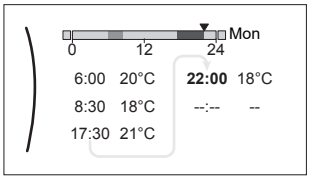 **Note:** To clear an action, set its time as the time of the previous action.	
4	Confirm the changes. **Result:** The schedule for Monday is defined. The value of the last action is valid until the next programmed action. In this example, Monday is the first day you programmed. Thus, the last programmed action is valid up to the first action of next Monday.	

To copy the schedule to the other weekdays

1	Select **Monday**. 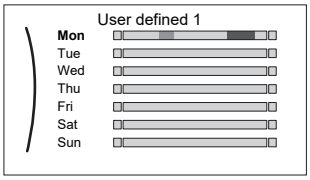	
2	Select **Copy**. 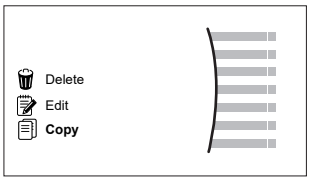 **Result:** Next to the copied day, "C" is displayed.	

3	Select **Tuesday**. 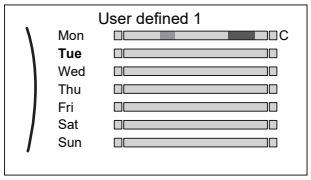	
4	Select **Paste**. 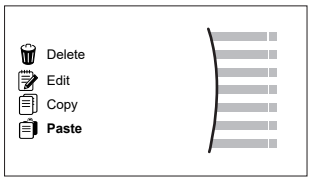 **Result:** 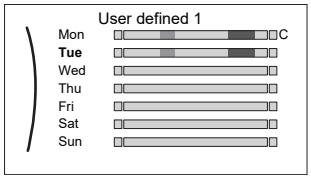	
5	Repeat this action for all other weekdays. 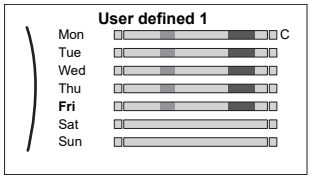	—

To program the schedule for Saturday and copy it to Sunday

1	Select **Saturday**.	
2	Select **Edit**.	
3	Use the left dial to select an entry and edit the entry with the right dial. 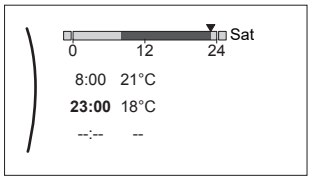	
4	Confirm the changes.	
5	Select **Saturday**.	
6	Select **Copy**.	
7	Select **Sunday**.	
8	Select **Paste**. **Result:** 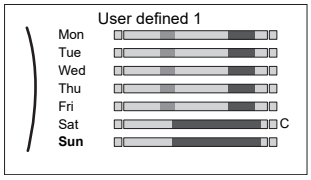	

To rename the schedule

1	Select the name of the current schedule. 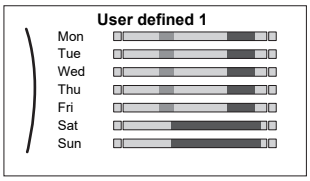	
2	Select **Rename**. 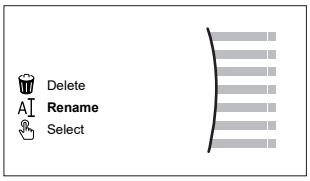	
3	(optional) To delete the current schedule name, browse through the character list until ← is displayed, then press to remove the previous character. Repeat for each character of the schedule name.	
4	To name the current schedule, browse through the character list and confirm the selected character. The schedule name can contain up to 15 characters.	
5	Confirm the new name.	

INFORMATION

Not all schedules can be renamed.

11.4 Weather-dependent curve

11.4.1 What is a weather-dependent curve?

Weather-dependent operation

The unit operates 'weather-dependent' if the desired leaving water or tank temperature is determined automatically by the outdoor temperature. It therefore is connected to a temperature sensor on the North wall of the building. If the outdoor temperature drops or rises, the unit compensates instantly. Thus, the unit does not have to wait for feedback by the thermostat to increase or decrease the temperature of the leaving water or tank. Because it reacts more quickly, it prevents high rises and drops of the indoor temperature and water temperature at tap points.

Advantage

Weather-dependent operation reduces energy consumption.

Weather-dependent curve

To be able to compensate for differences in temperature, the unit relies on its weather-dependent curve. This curve defines how much the temperature of the tank or leaving water must be at different outdoor temperatures. Because the slope of the curve depends on local circumstances such as climate and the insulation of the building, the curve can be adjusted by an installer or user.

Types of weather-dependent curve

There are 2 types of weather-dependent curves:

- 2-points curve
- Slope-offset curve

Which type of curve you use to make adjustments, depends on your personal preference. See "11.4.4 Using weather-dependent curves" [▸ 154].

Availability

The weather-dependent curve is available for:

- Main zone - Heating
- Main zone - Cooling
- Additional zone - Heating
- Additional zone - Cooling
- Tank (only available to installers)

INFORMATION

To operate weather-dependent, correctly configure the setpoint of the main zone, additional zone or tank. See "11.4.4 Using weather-dependent curves" [▸ 154].

11.4.2 2-points curve

Define the weather-dependent curve with these two setpoints:

- Setpoint (X1, Y2)
- Setpoint (X2, Y1)

Example

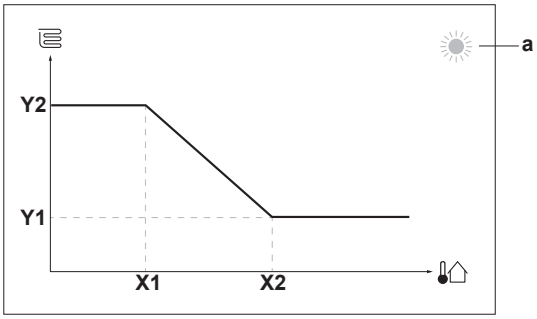

Item	Description
a	Selected weather-dependent zone: ▪ : Main zone or additional zone heating ▪ : Main zone or additional zone cooling ▪ : Domestic hot water
X1, X2	Examples of outdoor ambient temperature
Y1, Y2	Examples of desired tank temperature or leaving water temperature. The icon corresponds to the heat emitter for that zone: ▪ : Underfloor heating ▪ : Fan coil unit ▪ : Radiator ▪ : Domestic hot water tank

Possible actions on this screen	
	Go through the temperatures.
	Change the temperature.
	Go to the next temperature.
	Confirm changes and proceed.

11.4.3 Slope-offset curve

Slope and offset

Define the weather-dependent curve by its slope and offset:

- Change the **slope** to differently increase or decrease the temperature of the leaving water for different ambient temperatures. For example, if leaving water temperature is in general fine but at low ambient temperatures too cold, raise the slope so that leaving water temperature is heated increasingly more at decreasingly lower ambient temperatures.
- Change the **offset** to equally increase or decrease the temperature of the leaving water for different ambient temperatures. For example, if leaving water temperature is always a bit too cold at different ambient temperatures, shift the offset up to equally increase the leaving water temperature for all ambient temperatures.

Examples

Weather-dependent curve when slope is selected:

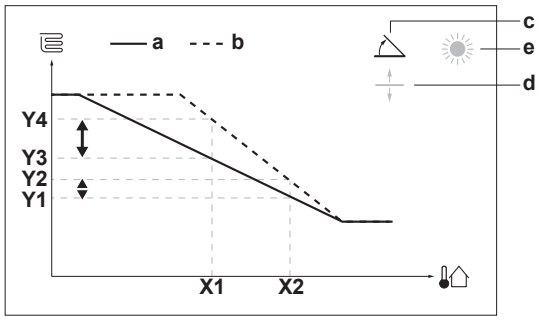

Weather-dependent curve when offset is selected:

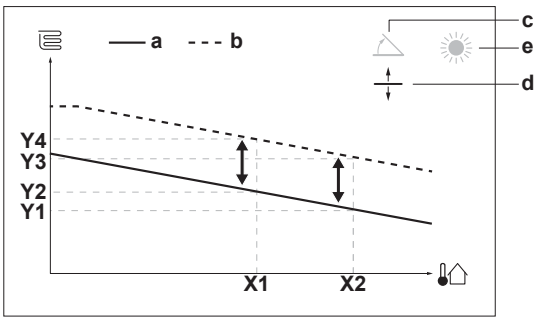

Item	Description
a	WD curve before changes.
b	WD curve after changes (as example): ▪ When slope is changed, the new preferred temperature at X1 is unequally higher than the preferred temperature at X2. ▪ When offset is changed, the new preferred temperature at X1 is equally higher as the preferred temperature at X2.
c	Slope
d	Offset
e	Selected weather-dependent zone: ▪ : Main zone or additional zone heating ▪ : Main zone or additional zone cooling ▪ : Domestic hot water
X1, X2	Examples of outdoor ambient temperature
Y1, Y2, Y3, Y4	Examples of desired tank temperature or leaving water temperature. The icon corresponds to the heat emitter for that zone: ▪ : Underfloor heating ▪ : Fan coil unit ▪ : Radiator ▪ : Domestic hot water tank

Possible actions on this screen	
	Select slope or offset.
	Increase or decrease the slope/offset.
	When slope is selected: set slope and go to offset. When offset is selected: set offset.
	Confirm changes and return to the submenu.

11.4.4 Using weather-dependent curves

Configure weather-dependent curves as following:

To define the setpoint mode

To use the weather-dependent curve, you need to define the correct setpoint mode:

Go to setpoint mode …	Set the setpoint mode to …
Main zone – Heating	
[2.4] Main zone > Setpoint mode	WD heating, fixed cooling OR Weather dependent
Main zone – Cooling	
[2.4] Main zone > Setpoint mode	Weather dependent
Additional zone – Heating	
[3.4] Additional zone > Setpoint mode	WD heating, fixed cooling OR Weather dependent
Additional zone – Cooling	
[3.4] Additional zone > Setpoint mode	Weather dependent
Tank	
[5.B] Tank > Setpoint mode	**Restriction:** Only available to installers. Weather dependent

To change the type of weather-dependent curve

To change the type for all zones (main + additional) and for the tank, go to [2.E] Main zone > WD curve type.

Viewing which type is selected is also possible via:

- [3.C] Additional zone > WD curve type

  Restriction: Only available to installers.

To change the weather-dependent curve

Zone	Go to …
Main zone – Heating	[2.5] Main zone > Heating WD curve
Main zone – Cooling	[2.6] Main zone > Cooling WD curve
Additional zone – Heating	[3.5] Additional zone > Heating WD curve
Additional zone – Cooling	[3.6] Additional zone > Cooling WD curve
Tank	**Restriction:** Only available to installers. [5.C] Tank > WD curve

INFORMATION

Maximum and minimum setpoints

You cannot configure the curve with temperatures that are higher or lower than the set maximum and minimum setpoints for that zone or for the tank. When the maximum or minimum setpoint is reached, the curve flattens out.

To fine-tune the weather-dependent curve: slope-offset curve

The following table describes how to fine-tune the weather-dependent curve of a zone or tank:

You feel …		Fine-tune with slope and offset:	
At regular outdoor temperatures …	At cold outdoor temperatures …	Slope	Offset
OK	Cold	↑	—
OK	Hot	↓	—
Cold	OK	↓	↑
Cold	Cold	—	↑
Cold	Hot	↓	↑
Hot	OK	↑	↓
Hot	Cold	↑	↓
Hot	Hot	—	↓

To fine-tune the weather-dependent curve: 2-points curve

The following table describes how to fine-tune the weather-dependent curve of a zone or tank:

You feel …		Fine-tune with setpoints:			
At regular outdoor temperatures …	At cold outdoor temperatures …	Y2[(a)]	Y1[(a)]	X1[(a)]	X2[(a)]
OK	Cold	↑	—	↑	—
OK	Hot	↓	—	↓	—
Cold	OK	—	↑	—	↑
Cold	Cold	↑	↑	↑	↑
Cold	Hot	↓	↑	↓	↑
Hot	OK	—	↓	—	↓
Hot	Cold	↑	↓	↑	↓
Hot	Hot	↓	↓	↓	↓

[(a)] See "11.4.2 2-points curve" [▸ 152].

11.5 Settings menu

You can set additional settings using the main menu screen and its submenus. The most important settings are presented here.

11.5.1 Malfunctioning

In case of a malfunction, 🔔 or ⚠ will appear on the home screen. To display the error code, open the menu screen and go to [0] `Malfunctioning`. Press **?** for more information about the error.

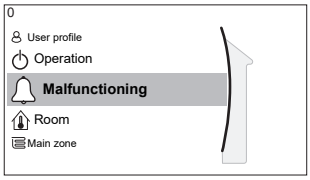

[0] `Malfunctioning`

11.5.2 Room

Setpoint screen

Control the room temperature of the main zone via setpoint screen [1] **Room**.

See "11.3.5 Setpoint screen" [▸ 146].

Antifrost

[1.4] **Antifrost** prevents the room from getting too cold. This setting is applicable when [2.9] **Control**=**Room thermostat**, but also offers functionality for leaving water temperature control and external room thermostat control. In case of the latter two, **Antifrost** can be activated by setting field setting [2-06]=1.

Room frost protection, when enabled, is not guaranteed when there is no room thermostat that can activate the heat pump. This is the case when:

- [2.9] **Control**=**External room thermostat** and [C.2] **Space heating/cooling**=**Off**, or if
- [2.9] **Control**=**Leaving water**.

In the above cases, **Antifrost** will heat the space heating water to a reduced setpoint when the outdoor temperature is lower than 4°C.

Main zone unit control method [2.9]	Description
Leaving water temperature control ([C-07]=0)	Room frost protection is NOT guaranteed.
External room thermostat control ([C-07]=1)	Allow for the external room thermostat to take care of room frost protection: ▪ Set [C.2] **Space heating/cooling**=**On**.
Room thermostat control ([C-07]=2)	Allow for the dedicated Human Comfort Interface (BRC1HHDA used as room thermostat) to take care of room frost protection: ▪ Set antifrost [1.4.1] **Activation**=**Yes**. ▪ Set the temperature of the antifrost function in [1.4.2] **Room setpoint**.

INFORMATION

If a U4 error occurs, room frost protection is NOT guaranteed.

NOTICE

If the room **Antifrost** setting is active and a U4 error occurs, the unit will automatically start the **Antifrost** function via the backup heater. If the backup heater is not allowed for room frost protection during a U4 error, the room **Antifrost** setting MUST be disabled.

NOTICE

Room frost protection. Even if you turn OFF space heating/cooling operation ([C.2]: **Operation** > **Space heating/cooling**), room frost protection operation –if enabled– can still activate. However, for leaving water temperature control and external room thermostat control, the protection is NOT guaranteed.

For more detailed information about room frost protection in relation to the applicable unit control method, see the sections below.

Leaving water temperature control ([C-07]=0)

Under leaving water temperature control, room frost protection is NOT guaranteed. However, if room antifrost [2-06] is activated, limited frost protection by the unit is possible:

If...	Then...
`Space heating/cooling` is OFF and the outdoor ambient temperature drops below 4°C	The unit will supply leaving water to the heat emitters to heat up the room again, and the leaving water temperature setpoint will be lowered.
`Space heating/cooling` is ON and the operation mode is "heating"	The unit will supply leaving water to the heat emitters to heat up the room according to normal logic.
`Space heating/cooling` is ON and the operation mode is "cooling"	There is no room frost protection.

External room thermostat control ([C-07]=1)

Under external room thermostat control, room frost protection is guaranteed by the external room thermostat, provided that:

- [C.2] `Space heating/cooling`=`On`, and
- [9.5.1] `Emergency`=`Automatic` or `auto SH normal/DHW off`.

However, if [1.4.1] `Antifrost` is activated, limited frost protection by the unit is possible.

In case of one leaving water temperature zone:

If...	Then...
`Space heating/cooling` is OFF and the outdoor ambient temperature drops below 4°C	The unit will supply leaving water to the heat emitters to heat up the room again, and the leaving water temperature setpoint will be lowered.
`Space heating/cooling` is ON, the external room thermostat is "Thermo OFF" and the outdoor temperature drops below 4°C	The unit will supply leaving water to the heat emitters to heat up the room again, and the leaving water temperature setpoint will be lowered.
`Space heating/cooling` is ON and the external room thermostat is "Thermo ON"	Room frost protection is guaranteed by the normal logic.

In case of two leaving water temperature zones:

If...	Then...
`Space heating/cooling` is OFF and the outdoor ambient temperature drops below 4°C	The unit will supply leaving water to the heat emitters to heat up the room again, and the leaving water temperature setpoint will be lowered.
`Space heating/cooling` is ON, the external room thermostat is "Thermo OFF", the operation mode is "heating" and the outdoor temperature drops below 4°C	The unit will supply leaving water to the heat emitters to heat up the room again, and the leaving water temperature setpoint will be lowered.

If...	Then...
`Space heating/cooling` is ON and the operation mode is "cooling"	There is no room frost protection.

Room thermostat control ([C-07]=2)

During room thermostat control, room frost protection [2-06] is guaranteed when activated. If so, and the room temperature drops below the room antifrost temperature [2-05], the unit will supply leaving water to the heat emitters to heat up the room again.

#	Code	Description
[1.4.1]	[2-06]	`Activation`: ▪ 0 `No`: Antifrost functionality is OFF. ▪ 1 `Yes`: Antifrost functionality is on.
[1.4.2]	[2-05]	`Room setpoint`: ▪ 4°C~16°C

INFORMATION

When the dedicated Human Comfort Interface (BRC1HHDA used as room thermostat) is disconnected (because of incorrect wiring or damage of the cable), then room frost protection is NOT guaranteed.

NOTICE

If `Emergency` is set to `Manual` ([9.5.1]=0), and the unit is triggered to start emergency operation, the unit will stop and needs to be recovered manually via the user interface. To recover operation manually, go to the `Malfunctioning` main menu screen, and confirm emergency operation before starting.

Room frost protection is active even if the user does not confirm emergency operation.

Room sensor offset

Only applicable in room thermostat control.

To calibrate the (external) room temperature sensor, give an offset to the value of the room thermistor as measured by the Human Comfort Interface (BRC1HHDA used as room thermostat) or by the external room sensor. The setting can be used to compensate for situations where the Human Comfort Interface or the external room sensor cannot be installed at the ideal location.

See "6.7 Setting up an external temperature sensor" [▸ 56].

#	Code	Description
[1.6]	[2-0A]	`Room sensor offset` (Human Comfort Interface (BRC1HHDA used as room thermostat)): Offset on the actual room temperature measured by the Human Comfort Interface. ▪ –5°C~5°C, step 0.5°C
[1.7]	[2-09]	`Room sensor offset` (external room sensor option): Only applicable if the external room sensor option is installed and configured. ▪ –5°C~5°C, step 0.5°C

11.5.3 Main zone

Setpoint screen

Control the leaving water temperature for the main zone via setpoint screen [2] `Main zone`.

See "11.3.5 Setpoint screen" [▸ 146].

Schedule

Indicate if the temperature of the leaving water is defined according to a schedule or not.

Influence of the LWT setpoint mode [2.4] is as follows:

- In `Fixed` LWT setpoint mode, the scheduled actions consist of desired leaving water temperatures, either preset or custom.
- In `Weather dependent` LWT setpoint mode, the scheduled actions consist of desired shift actions, either preset or custom.

#	Code	Description
[2.1]	N/A	`Schedule`: ▪ 0: `No` ▪ 1: `Yes`

Heating schedule

Define a heating temperature schedule for the main zone via [2.2] `Heating schedule`.

See "11.3.7 Schedule screen: Example" [▸ 147].

Cooling schedule

Define a cooling temperature schedule for the main zone via [2.3] `Cooling schedule`.

See "11.3.7 Schedule screen: Example" [▸ 147].

Setpoint mode

Define the setpoint mode:

- `Fixed`: the desired leaving water temperature does not depend on the outdoor ambient temperature.
- In `WD heating, fixed cooling` mode, the desired leaving water temperature:
  - depends on the outdoor ambient temperature for heating
  - does NOT depend on the outdoor ambient temperature for cooling
- In `Weather dependent` mode, the desired leaving water temperature depends on the outdoor ambient temperature.

#	Code	Description
[2.4]	N/A	`Setpoint mode`: ▪ `Fixed` ▪ `WD heating, fixed cooling` ▪ `Weather dependent`

When weather dependent operation is active, low outdoor temperatures will result in warmer water and vice versa. During weather dependent operation, the user can shift the water temperature up or down by a maximum of 10°C.

Heating WD curve

Set weather-dependent heating for the main zone (if [2.4]=1 or 2):

#	Code	Description
[2.5]	[1-00] [1-01] [1-02] [1-03]	Set weather-dependent heating: **Note:** There are 2 methods to set the weather dependent curve. See "11.4.2 2-points curve" [▶ 152] and "11.4.3 Slope-offset curve" [▶ 153]. Both curve types require 4 field settings to be configured according to the figure below. 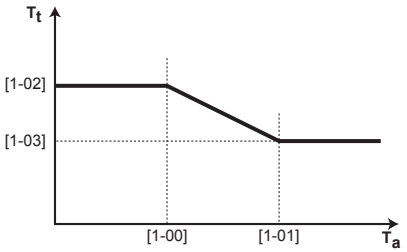 ▪ T_t: Target leaving water temperature (main zone) ▪ T_a: Outdoor temperature ▪ [1-00]: Low outdoor ambient temperature. –40°C~+5°C ▪ [1-01]: High outdoor ambient temperature. 10°C~25°C ▪ [1-02]: Desired leaving water temperature when the outdoor temperature equals or drops below the low ambient temperature. [9-01]°C~[9-00]°C **Note:** This value should be higher than [1-03] as for low outdoor temperatures warmer water is required. ▪ [1-03]: Desired leaving water temperature when the outdoor temperature equals or rises above the high ambient temperature. [9-01]°C~min(45, [9-00])°C **Note:** This value should be lower than [1-02] as for high outdoor temperatures less warm water is required.

Cooling WD curve

Set weather-dependent cooling for the main zone (if [2.4]=2):

#	Code	Description
[2.6]	[1-06] [1-07] [1-08] [1-09]	Set weather-dependent cooling: **Note:** There are 2 methods to set the weather dependent curve. See "11.4.2 2-points curve" [▶ 152] and "11.4.3 Slope-offset curve" [▶ 153]. Both curve types require 4 field settings to be configured according to the figure below. 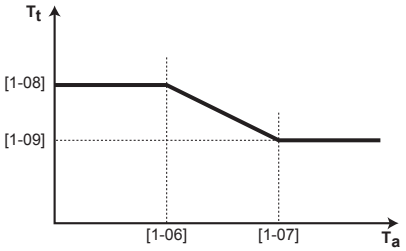 ▪ T_t: Target leaving water temperature (main zone) ▪ T_a: Outdoor temperature ▪ [1-06]: Low outdoor ambient temperature. 10°C~25°C ▪ [1-07]: High outdoor ambient temperature. 25°C~43°C ▪ [1-08]: Desired leaving water temperature when the outdoor temperature equals or drops below the low ambient temperature. [9-03]°C~[9-02]°C **Note:** This value should be higher than [1-09] as for low outdoor temperatures less cold water is required. ▪ [1-09]: Desired leaving water temperature when the outdoor temperature equals or rises above the high ambient temperature. [9-03]°C~[9-02]°C **Note:** This value should be lower than [1-08] as for high outdoor temperatures colder water is required.

Emitter type

Heating up or cooling down the main zone can take longer. This depends on:

- The water volume of the system
- The heater emitter type of the main zone

The setting **`Emitter type`** can compensate for a slow or a quick heating/cooling system during the heat up/cool down cycle. In room thermostat control, **`Emitter type`** influences the maximum modulation of the desired leaving water temperature, and the possibility for usage of the automatic cooling/heating changeover based on the indoor ambient temperature.

It is important to set **`Emitter type`** correctly and in accordance with your system layout. The target delta T for the main zone depends on it.

#	Code	Description
[2.7]	[2-0C]	`Emitter type`: ▪ 0: `Underfloor heating` ▪ 1: `Fancoil unit` ▪ 2: `Radiator`

The setting `Emitter type` influences the space heating setpoint range and the target delta T in heating as follows:

`Emitter type` Main zone	Space heating setpoint range [9-01]~[9-00]	Target delta T in heating [1-0B]
0: `Underfloor heating`	Maximum 55°C	Variable (see [2.B.1])
1: `Fancoil unit`	Maximum 65°C	Variable (see [2.B.1])
2: `Radiator`	Maximum 65°C	Variable (see [2.B.1])

NOTICE

The maximum setpoint in space heating depends on the emitter type as can be seen in above table. If there are 2 water temperature zones, then the maximum setpoint is the maximum of the 2 zones.

NOTICE

NOT configuring the system in the following way can cause damage to the heat emitters. If there are 2 zones, it is important that in heating:

- the zone with the lowest water temperature is configured as the main zone, and
- the zone with the highest water temperature is configured as the additional zone.

NOTICE

If there are 2 zones and the emitter types are wrongly configured, water of high temperature can be sent towards a low temperature emitter (underfloor heating). To avoid this:

- Install an aquastat/thermostatic valve to avoid too high temperatures towards a low temperature emitter.
- Make sure you set the emitter types for the main zone [2.7] and for the additional zone [3.7] correctly in accordance with the connected emitter.

Setpoint range

To prevent a wrong (i.e. too hot or too cold) leaving water temperature for the main leaving water temperature zone, limit its temperature range.

NOTICE

In case of a floor heating application it is important to limit the:

- maximum leaving water temperature at heating operation according to the specifications of the floor heating installation.
- the minimum leaving water temperature at cooling operation to 18~20°C to prevent condensation on the floor.

NOTICE

- When adjusting the leaving water temperature ranges, all desired leaving water temperatures are also adjusted to guarantee they are between the limits.
- Always balance between the desired leaving water temperature with the desired room temperature and/or the capacity (according to the design and selection of the heat emitters). The desired leaving water temperature is the result of several settings (preset values, shift values, weather-dependent curves, modulation). As a result, too high or too low leaving water temperatures could occur which lead to overtemperatures or capacity shortage. By limiting the leaving water temperature range to adequate values (depending on the heat emitter), such situations can be avoided.

Example: In heating mode, leaving water temperatures must be sufficiently higher than the room temperatures. To avoid that the room cannot heat up as desired, set the minimum leaving water temperature to 28°C.

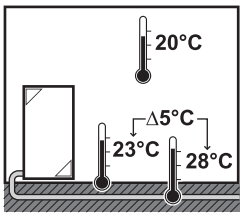

#	Code	Description
Leaving water temperature range for the main leaving water temperature zone (= the leaving water temperature zone with the lowest leaving water temperature in heating operation and the highest leaving water temperature in cooling operation)		
[2.8.1]	[9-01]	`Heating minimum`: ▪ 15°C~37°C
[2.8.2]	[9-00]	`Heating maximum`: ▪ [2-0C]=0 (emitter type main zone = underfloor heating) 37°C~55°C ▪ Else: 37°C~65°C
[2.8.3]	[9-03]	`Cooling minimum`: ▪ 5°C~18°C
[2.8.4]	[9-02]	`Cooling maximum`: ▪ 18°C~22°C

Control

Define how the operation of the unit is controlled.

Control	In this control...
`Leaving water`	Unit operation is decided based on the leaving water temperature regardless the actual room temperature and/or heating or cooling demand of the room.
`External room thermostat`	Unit operation is decided by the external thermostat or equivalent (e.g. heat pump convector).
`Room thermostat`	Unit operation is decided based on the ambient temperature of the dedicated Human Comfort Interface (BRC1HHDA used as room thermostat).

#	Code	Description
[2.9]	[C-07]	▪ 0: `Leaving water` ▪ 1: `External room thermostat` ▪ 2: `Room thermostat`

Ext thermostat type

Only applicable in external room thermostat control.

NOTICE

If an external room thermostat is used, the external room thermostat will control the room frost protection. However, the room frost protection is only possible if [C.2] `Space heating/cooling`=`On`.

#	Code	Description
[2.A]	[C-05]	External room thermostat type for the main zone: ▪ 1: `1 contact`: The used external room thermostat can only send a thermo ON/OFF condition. There is no separation between heating or cooling demand. The room thermostat is connected to only 1 digital input (X2M/35). Select this value in case of a connection to the heat pump convector (FWXV). ▪ 2: `2 contacts`: The used external room thermostat can send a separate heating/cooling thermo ON/OFF condition. The room thermostat is connected to 2 digital inputs (X2M/35 and X2M/34). Select this value in case of a connection to the wired (EKRTWA) or wireless (EKRTR1, EKRTRB) room thermostat

Leaving water temperature: Delta T

In heating for the main zone, the target delta T (temperature difference) depends on the selected emitter type for the main zone.

Delta T is the absolute value of the temperature difference between the leaving water and entering water.

The unit is designed to support underfloor loops operation. The recommended leaving water temperature for underfloor loops is 35°C. In such case, the unit will realize a temperature difference of 5°C, which means that the entering water temperature is around 30°C.

Depending on the installed type of heat emitters (radiators, heat pump convector, underfloor loops) or situation, you can change the difference between entering and leaving water temperature.

Note: The pump will regulate its flow to keep the delta T. In some special cases, the measured delta T can differ from the set value.

INFORMATION

In heating, the target delta T will only be achieved after some operation time, when the setpoint is being reached, because of the big difference between leaving water temperature setpoint and inlet temperature at startup.

INFORMATION

If the main zone or the additional zone has a heating demand, and this zone is equipped with radiators, then the target delta T that the unit will use in heating operation will be equal to the temperature set in [2.B].

If the zones are not equipped with radiators, then in heating the unit will give priority to the target delta T for the additional zone, if there is a heating demand in the additional zone.

In cooling the unit will give priority to the target delta T for the additional zone, if there is a cooling demand in the additional zone.

#	Code	Description
[2.B.1]	[1-0B]	`Delta T heating`: A minimum temperature difference is required for proper operation of heat emitters in heating mode. ▪ 3°C~10°C
[2.B.2]	[1-0D]	`Delta T cooling`: A minimum temperature difference is required for proper operation of heat emitters in cooling mode. ▪ 3°C~10°C

Leaving water temperature: Modulation

Only applicable in case of room thermostat control.

When using the room thermostat functionality, the customer needs to set the desired room temperature. The unit will supply hot water to the heat emitters and the room will be heated.

Additionally, also the desired leaving water temperature must be configured: if `Modulation` is enabled, the unit automatically calculates the desired leaving water temperature. These calculations are based on:

- the preset temperatures, or
- the desired weather-dependent temperatures (if weather-dependent is enabled)

Moreover, with `Modulation` enabled, the desired leaving water temperature is lowered or raised in function of the desired room temperature and the difference between the actual and the desired room temperature. This results in:

- stable room temperatures, exactly matching the desired temperature (higher comfort level)
- less on/off cycles (lower noise level, higher comfort and higher efficiency)
- water temperatures as low as possible to match the desired temperature (higher efficiency)

If `Modulation` is disabled, set the desired leaving water temperature via [2] `Main zone`.

#	Code	Description
[2.C.1]	[8-05]	`Modulation`: ▪ 0 `No` (disabled) ▪ 1 `Yes` (enabled) **Note:** The desired leaving water temperature can only be read out on the user interface.
[2.C.2]	[8-06]	`Max modulation`: ▪ 0°C~10°C This is the temperature value by which the desired leaving water temperature is increased or decreased.

INFORMATION

When leaving water temperature modulation is enabled, the weather-dependent curve needs to be set to a higher position than [8-06] plus the minimum leaving water temperature setpoint required to reach a stable condition on the comfort setpoint for the room. To increase efficiency, modulation can lower the leaving water setpoint. By setting the weather-dependent curve to a higher position, it cannot drop below the minimum setpoint. See the illustration below.

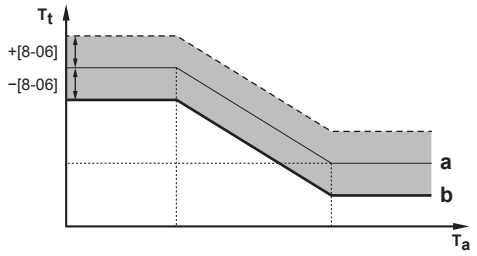

a Weather-dependent curve
b Minimum leaving water temperature setpoint required to reach a stable condition on the comfort setpoint for the room.

WD curve type

The weather-dependent curve can be defined using the `2-points` method or the `Slope-Offset` method.

See "11.4.2 2-points curve" [▸ 152] and "11.4.3 Slope-offset curve" [▸ 153].

#	Code	Description
[2.E]	N/A	▪ `2-points` ▪ `Slope-Offset`

11.5.4 Additional zone

Setpoint screen

Control the leaving water temperature for the additional zone via setpoint screen [3] `Additional zone`.

See "11.3.5 Setpoint screen" [▸ 146].

Schedule

Indicates if the desired leaving water temperature is according to a schedule.

See "11.5.3 Main zone" [▸ 160].

#	Code	Description
[3.1]	N/A	`Schedule`: ▪ `No` ▪ `Yes`

Heating schedule

Define a heating temperature schedule for the additional zone via [3.2] `Heating schedule`.

See "11.3.7 Schedule screen: Example" [▶ 147].

Cooling schedule

Define a cooling temperature schedule for the additional zone via [3.3] `Cooling schedule`.

See "11.3.7 Schedule screen: Example" [▶ 147].

Setpoint mode

The setpoint mode of the additional zone can be independently set from the setpoint mode of the main zone.

See "**Setpoint mode**" [▶ 160].

#	Code	Description
[3.4]	N/A	`Setpoint mode`: ▪ `Fixed` ▪ `WD heating, fixed cooling` ▪ `Weather dependent`

Heating WD curve

Set weather-dependent heating for the additional zone (if [3.4]=1 or 2):

#	Code	Description
[3.5]	[0-00] [0-01] [0-02] [0-03]	Set weather-dependent heating: **Note:** There are 2 methods to set the weather dependent curve. See "11.4.2 2-points curve" [▶ 152] and "11.4.3 Slope-offset curve" [▶ 153]. Both curve types require 4 field settings to be configured according to the figure below. 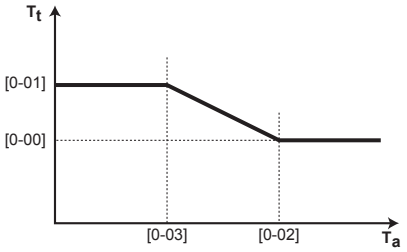 ▪ T_t: Target leaving water temperature (additional zone) ▪ T_a: Outdoor temperature ▪ [0-03]: Low outdoor ambient temperature. –40°C~+5°C ▪ [0-02]: High outdoor ambient temperature. 10°C~25°C ▪ [0-01]: Desired leaving water temperature when the outdoor temperature equals or drops below the low ambient temperature. [9-05]°C~[9-06]°C **Note:** This value should be higher than [0-00] as for low outdoor temperatures warmer water is required. ▪ [0-00]: Desired leaving water temperature when the outdoor temperature equals or rises above the high ambient temperature. [9-05]~min(45, [9-06])°C **Note:** This value should be lower than [0-01] as for high outdoor temperatures less warm water is required.

Cooling WD curve

Set weather-dependent cooling for the additional zone (if [3.4]=2):

#	Code	Description
[3.6]	[0-04] [0-05] [0-06] [0-07]	Set weather-dependent cooling: **Note:** There are 2 methods to set the weather dependent curve. See "11.4.2 2-points curve" [▶ 152] and "11.4.3 Slope-offset curve" [▶ 153]. Both curve types require 4 field settings to be configured according to the figure below. 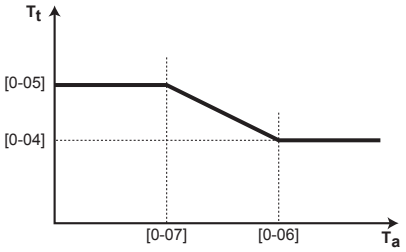 ▪ T_t: Target leaving water temperature (additional zone) ▪ T_a: Outdoor temperature ▪ [0-07]: Low outdoor ambient temperature. 10°C~25°C ▪ [0-06]: High outdoor ambient temperature. 25°C~43°C ▪ [0-05]: Desired leaving water temperature when the outdoor temperature equals or drops below the low ambient temperature. [9-07]°C~[9-08]°C **Note:** This value should be higher than [0-04] as for low outdoor temperatures less cold water is required. ▪ [0-04]: Desired leaving water temperature when the outdoor temperature equals or rises above the high ambient temperature. [9-07]°C~[9-08]°C **Note:** This value should be lower than [0-05] as for high outdoor temperatures colder water is required.

Emitter type

For more information about `Emitter type`, see "11.5.3 Main zone" [▶ 160].

#	Code	Description
[3.7]	[2-0D]	`Emitter type`: ▪ 0: `Underfloor heating` ▪ 1: `Fancoil unit` ▪ 2: `Radiator`

The setting of the emitter type has an influence on the space heating setpoint range and the target delta T in heating as follows:

Emitter type Additional zone	Space heating setpoint range [9-05]~[9-06]	Target delta T in heating [1-0C]
0: Underfloor heating	Maximum 55°C	Variable (see [3.B.1])
1: Fancoil unit	Maximum 65°C	Variable (see [3.B.1])
2: Radiator	Maximum 65°C	Variable (see [3.B.1])

Setpoint range

For more information about Setpoint range, see "11.5.3 Main zone" [▶ 160].

#	Code	Description
Leaving water temperature range for the additional leaving water temperature zone (= the leaving water temperature zone with the highest leaving water temperature in heating operation and the lowest leaving water temperature in cooling operation)		
[3.8.1]	[9-05]	Heating minimum: 15°C~37°C
[3.8.2]	[9-06]	Heating maximum: ▪ [2-0D]=0 (emitter type additional zone = underfloor heating) 37°C~55°C ▪ Else: 37°C~65°C
[3.8.3]	[9-07]	Cooling minimum: 5°C~18°C
[3.8.4]	[9-08]	Cooling maximum: 18°C~22°C

Control

The control type for the additional zone is read only. It is determined by the control type of the main zone.

See "11.5.3 Main zone" [▶ 160].

#	Code	Description
[3.9]	N/A	Control: ▪ Leaving water if the control type of the main zone is Leaving water. ▪ External room thermostat if the control type of the main zone is: - External room thermostat,or - Room thermostat.

Ext thermostat type

Only applicable in external room thermostat control.

Also see "11.5.3 Main zone" [▶ 160].

#	Code	Description
[3.A]	[C-06]	External room thermostat type for the additional zone: ▪ 1: `1 contact`. Connected to only 1 digital input (X2M/35a) ▪ 2: `2 contacts`. Connected to 2 digital inputs (X2M/34a and X2M/35a)

Leaving water temperature: Delta T

For more information, see "11.5.3 Main zone" [▶ 160].

#	Code	Description
[3.B.1]	[1-0C]	`Delta T heating`: A minimum temperature difference is required for the good operation of heat emitters in heating mode. ▪ 3°C~10°C
[3.B.2]	[1-0E]	`Delta T cooling`: A minimum temperature difference is required for the good operation of heat emitters in cooling mode. ▪ 3°C~10°C

WD curve type

There are 2 methods to define the weather-dependent curves:

- `2-points` (see "11.4.2 2-points curve" [▶ 152])
- `Slope-Offset` (see "11.4.3 Slope-offset curve" [▶ 153])

In [2.E] `WD curve type`, you can choose which method you want to use.

In [3.C] `WD curve type`, the chosen method is shown read-only (same value as in [2.E]).

#	Code	Description
[2.E] / [3.C]	N/A	▪ `2-points` ▪ `Slope-Offset`

11.5.5 Space heating/cooling

About space operation modes

Your unit can be a heating or a heating/cooling model:

- If your unit is a heating model, it can heat up a space.
- If your unit is a heating/cooling model, it can both heat up and cool down a space. You have to tell the system which operation mode to use.

To determine if a heating/cooling heat pump model is installed

1	Go to [4]: `Space heating/cooling`.	
2	Check if [4.1] `Operation mode` is listed and editable. If so, a heating/cooling heat pump model is installed.	

To tell the system which space operation to use, you can:

You can...	Location
Check which space operation mode is currently used.	Home screen

You can...	Location
Set the space operation mode permanently.	Main menu
Restrict automatic changeover according to a monthly schedule.	

To check which space operation mode is currently used

The space operation mode is displayed on the home screen:

- When the unit is in heating mode, the ☼ icon is shown.
- When the unit is in cooling mode, the ❄ icon is shown.

The status indicator shows if the unit is currently in operation:

- When the unit is not in operation, the status indicator will show a blue pulsation with an interval of approximately 5 seconds.
- While the unit is in operation, the status indicator will light up blue constantly.

To set the space operation mode

1	Go to [4.1]: `Space heating/cooling` > `Operation mode`	
2	Select one of the following options: ▪ `Heating`: Only heating mode ▪ `Cooling`: Only cooling mode ▪ `Automatic`: The operation mode changes automatically between heating and cooling based on the outdoor temperature. Restricted per month according to the `Operation mode schedule` [4.2].	

When `Automatic` is selected, the unit switches its operation mode, based on the `Operation mode schedule` [4.2]. In this schedule, the end user indicates which operation is allowed for each month.

Operation range

Depending on the average outdoor temperature, the operation of the unit in space heating or space cooling is prohibited.

#	Code	Description
[4.3.1]	[4-02]	`Space heating off temperature`: When the averaged outdoor temperature rises above this value, space heating is turned off.[(a)] ▪ 14°C~35°C
[4.3.2]	[F-01]	`Space cooling off temperature`: When the averaged outdoor temperature drops below this value, space cooling is turned off.[(a)] ▪ 10°C~35°C

[(a)] This setting is also used in automatic heating/cooling changeover.

Exception: If the system is configured in room thermostat control with one leaving water temperature zone and quick heat emitters, the operation mode will change based on the measured indoor temperature. Besides the desired heating/cooling room temperature, the installer sets a hysteresis value (e.g. when in heating, this value is related to the desired cooling temperature) and an offset value (e.g. when in heating, this value is related to the desired heating temperature).

Example: A unit is configured as following:

- Desired room temperature in heating mode: 22°C
- Desired room temperature in cooling mode: 24°C
- Hysteresis value: 1°C
- Offset: 4°C

Changeover from heating to cooling will occur when the room temperature rises above the maximum of the desired cooling temperature added by the hysteresis value (thus 24+1=25°C) and the desired heating temperature added by the offset value (thus 22+4=26°C).

Oppositely, changeover from cooling to heating will occur when the room temperature drops below the minimum of the desired heating temperature subtracted by the hysteresis value (thus 22–1=21°C) and the desired cooling temperature subtracted by the offset value (thus 24–4=20°C)

Guard timer to prevent too frequent changing from heating to cooling and vice versa.

#	Code	Description
Changeover settings related to the indoor temperature. Only applicable when **Automatic** is selected and the system is configured in room thermostat control with 1 leaving water temperature zone and quick heat emitters.		
N/A	[4-0B]	Hysteresis: ensures that changeover is only done when necessary. The space operation only changes from heating to cooling when the room temperature rises above the desired cooling temperature added by the hysteresis value. ▪ Range: 1°C~10°C
N/A	[4-0D]	Offset: ensures that the active desired room temperature is always reached. In heating mode, the space operation only changes when the room temperature rises above the desired heating temperature added by the offset value. ▪ Range: 1°C~10°C

Number of zones

The system can supply leaving water to up to 2 water temperature zones. During configuration, the number of water zones must be set.

INFORMATION

Mixing station. If your system layout contains 2 LWT zones, you need to install a mixing station in front of the main LWT zone.

#	Code	Description
[4.4]	[7-02]	▪ 0: `Single zone` Only one leaving water temperature zone: 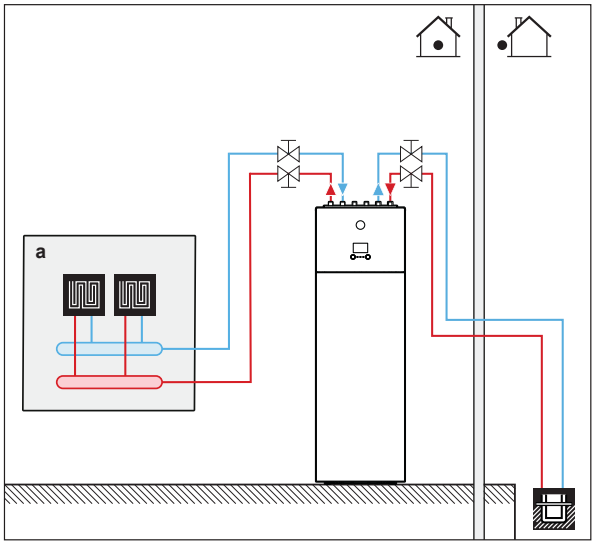 **a** Main LWT zone
[4.4]	[7-02]	▪ 1: `Dual zone` Two leaving water temperature zones. The main leaving water temperature zone consists of the higher load heat emitters and a mixing station to achieve the desired leaving water temperature. In heating: 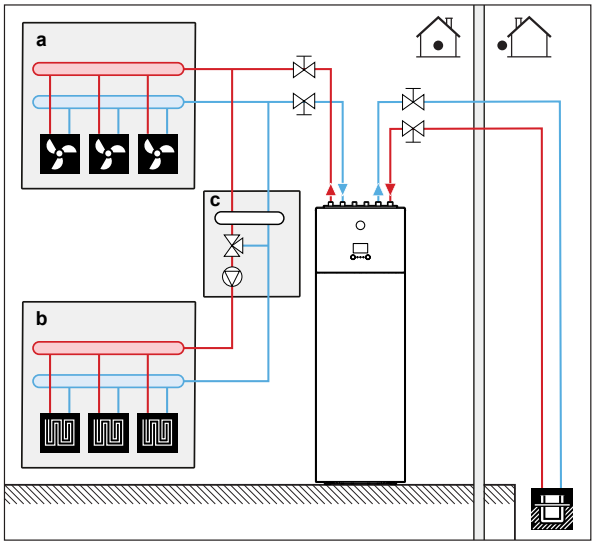 **a** Additional LWT zone: Highest temperature **b** Main LWT zone: Lowest temperature **c** Mixing station

NOTICE

NOT configuring the system in the following way can cause damage to the heat emitters. If there are 2 zones, it is important that in heating:

- the zone with the lowest water temperature is configured as the main zone, and
- the zone with the highest water temperature is configured as the additional zone.

NOTICE

If there are 2 zones and the emitter types are wrongly configured, water of high temperature can be sent towards a low temperature emitter (underfloor heating). To avoid this:

- Install an aquastat/thermostatic valve to avoid too high temperatures towards a low temperature emitter.
- Make sure you set the emitter types for the main zone [2.7] and for the additional zone [3.7] correctly in accordance with the connected emitter.

Pump operation mode

When the space heating/cooling operation is OFF, the pump is always OFF. When space heating/cooling operation is ON, you have the choice between these operation modes:

#	Code	Description
[4.5]	[F–0D]	`Pump operation mode`: ▪ 0 `Continuous`: Continuous pump operation, regardless of thermo ON or OFF condition. **Remark:** Continuous pump operation requires more energy than sample or request pump operation. 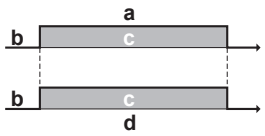 **a** Space heating/cooling control **b** Off **c** On **d** Pump operation

#	Code	Description
[4.5]	[F-0D]	▪ 1 `Sample`: The pump is ON when there is heating or cooling demand as the leaving water temperature has not yet reached the desired temperature yet. When thermo OFF condition occurs, the pump runs every 3 minutes to check the water temperature and demand heating or cooling if necessary. **Remark:** Sample is ONLY available in leaving water temperature control. 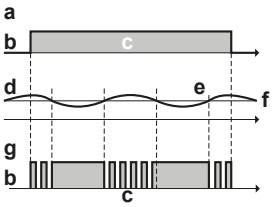 **a** Space heating/cooling control **b** Off **c** On **d** LWT temperature **e** Actual **f** Desired **g** Pump operation
[4.5]	[F-0D]	▪ 2 `Request`: Pump operation based on request. **Example:** Using a room thermostat and thermostat creates thermo ON/OFF condition. **Remark:** NOT available in leaving water temperature control. 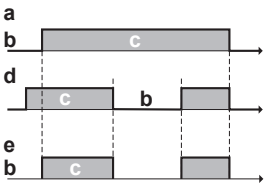 **a** Space heating/cooling control **b** Off **c** On **d** Heating demand (by external room thermostat or room thermostat) **e** Pump operation

Unit type

In this part of the menu it can be read out which type of unit is used:

#	Code	Description
[4.6]	[E-02]	`Unit type`: ▪ 0 `Reversible` ▪ 1 `Heating only`

Pump limitation

Pump speed limitation [9-0D] defines the maximum pump speed. In normal conditions, the default setting should NOT be modified. The pump speed limitation will be overruled when the flow rate is in the range of the minimum flow (error 7H).

In most cases, instead of using [9-0D], you can prevent flow noises by performing hydraulic balancing.

#	Code	Description
[4.7]	[9-0D]	`Pump limitation` Possible values: see below.

Possible values:

Value	Description
0	`No limitation`
1~4	General limitation. There is limitation in all conditions. The required delta T control and comfort are NOT guaranteed. ▪ 1: `90% pump speed` ▪ 2: `80% pump speed` ▪ 3: `70% pump speed` ▪ 4: `60% pump speed`
5~8	Limitation when no actuators. When there is no heating output, the pump speed limitation is applicable. When there is heating output, the pump speed is only determined by delta T in relation to the required capacity. With this limitation range, delta T is possible and the comfort is guaranteed. During sampling operation the pump runs for a short time to measure the water temperatures, which indicate if operation is required or not. ▪ 5: `90% pump speed during sampling` ▪ 6: `80% pump speed during sampling` ▪ 7: `70% pump speed during sampling` ▪ 8: `60% pump speed during sampling`

The maximum values depend on the unit type:

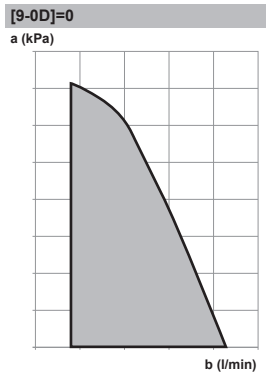

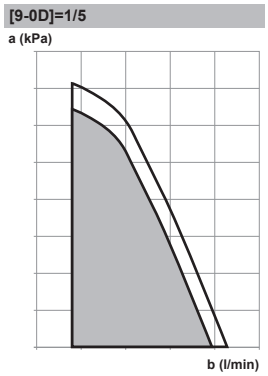

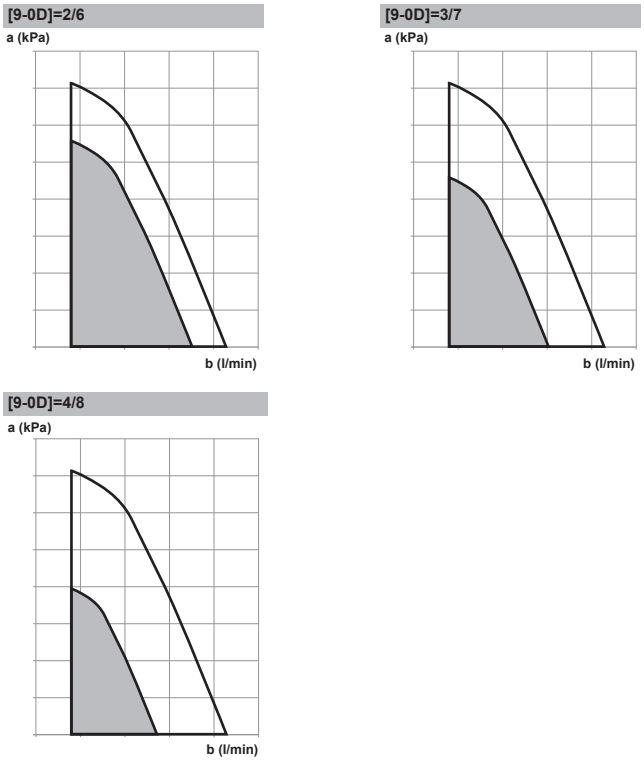

a External static pressure
b Water flow rate

Pump outside range

When the pump operation function is disabled the pump will stop if the outdoor temperature is higher than the value set by the `Space heating off temperature` [4-02] or if the outdoor temperature drops below the value set by the `Space cooling off temperature` [F-01]. When the pump operation is enabled, the pump operation is possible at all outdoor temperatures.

#	Code	Description
[4.9]	[F-00]	Pump operation: ▪ 0: Disabled if outdoor temperature is higher than [4-02] or lower than [F-01] depending on heating/cooling operation mode. ▪ 1: Possible at all outdoor temperatures.

Increase around 0°C

Use this setting to compensate for possible heat losses of the building due to the evaporation of melted ice or snow. (e.g. in cold region countries).

In heating operation, the desired leaving water temperature is locally increased around an outdoor temperature of 0°C.This compensation can be selected when using an absolute or a weather dependent desired temperature (see illustration below).

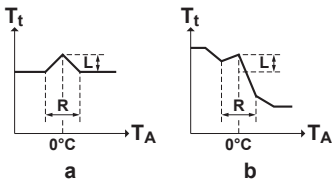

a Absolute desired LWT
b Weather dependent desired LWT

#	Code	Description
[4.A]	[D-03]	`Increase around 0°C`: ▪ 0: `No` ▪ 1: `increase 2°C, span 4°C` ▪ 2: `increase 4°C, span 4°C` ▪ 3: `increase 2°C, span 8°C` ▪ 4: `increase 4°C, span 8°C`

Overshoot

Restriction: This function is only applicable in heating mode.

This function defines how much the water temperature may rise above the desired leaving water temperature before the compressor stops. The compressor will start up again when the leaving water temperature drops below the desired leaving water temperature.

A higher value will result in less start/stop cycles of the heat pump, but could also lead to lesser comfort. The opposite is valid if a lower value is chosen.

#	Code	Description
[4.B]	[9-04]	`Overshoot`: ▪ 1°C~4°C

Antifrost

`Antifrost` [1.4] or [4.C] prevents the room from getting too cold. For more information about room frost protection, see "11.5.2 Room" [▸ 157].

11.5.6 Tank

Tank setpoint screen

You can set the domestic hot water temperature using the setpoint screen. For more information about how to do this, see "11.3.5 Setpoint screen" [▸ 146].

Powerful operation

You can use powerful operation to immediately start heating up the water to the preset value (Storage comfort). However, this consumes extra energy. If powerful operation is active, will be shown on the home screen.

To activate powerful operation

Activate or deactivate `Powerful operation` as follows:

1	Go to [5.1]: `Tank` > `Powerful operation`	
2	Turn powerful operation `Off` or `On`.	

Usage example: You immediately need more hot water

If you are in the following situation:

- You already consumed most of your hot water.
- You cannot wait for the next scheduled action to heat up the DHW tank.

Then you can activate DHW powerful operation.

Advantage: The DHW tank immediately starts heating up the water to the preset value (Storage comfort).

INFORMATION

When powerful operation is active, the risk of space heating/cooling and capacity shortage comfort problems is significant. In case of frequent domestic hot water operation, frequent and long space heating/cooling interruptions will happen.

Comfort setpoint

Only applicable when domestic hot water preparation is `Schedule only` or `Schedule + reheat`. When programming the schedule, you can make use of the comfort setpoint as a preset value. When you later want to change the storage setpoint, you only have to do it in one place.

The tank will heat up until the **storage comfort temperature** has been reached. It is the higher desired temperature when a storage comfort action is scheduled.

Additionally, a storage stop can be programmed. This feature puts a stop to tank heating even if the setpoint has NOT been reached. Only program a storage stop when tank heating is absolutely undesirable.

#	Code	Description
[5.2]	[6-0A]	`Comfort setpoint`: ▪ 30°C~[6-0E]°C

Eco setpoint

The **storage economic temperature** denotes the lower desired tank temperature. It is the desired temperature when a storage economic action is scheduled (preferably during day).

#	Code	Description
[5.3]	[6-0B]	`Eco setpoint`: ▪ 30°C~min(50,[6-0E])°C

Reheat setpoint

Desired reheat tank temperature, used:

- in `Schedule + reheat` mode, during reheat mode: the guaranteed minimum tank temperature is set by the `Reheat setpoint` minus the reheat hysteresis. If the tank temperature drops below this value, the tank is heated up.
- during storage comfort, to prioritize the domestic hot water preparation. When the tank temperature rises above this value, domestic hot water preparation and space heating/cooling are executed sequentially.

#	Code	Description
[5.4]	[6-0C]	`Reheat setpoint`: ▪ 30°C~min(50,[6-0E])°C

Schedule

You can set the tank temperature schedule using the schedule screen. For more information about this screen, see "11.3.7 Schedule screen: Example" [▶ 147].

Heat up mode

The domestic hot water can be prepared in 3 different ways. They differ from each other by the way the desired tank temperature is set and how the unit acts upon it.

#	Code	Description
[5.6]	[6-0D]	`Heat up mode`: ▪ 0: `Reheat only`: Only reheat operation is allowed. ▪ 1: `Schedule + reheat`: The domestic hot water tank is heated according to a schedule and between the scheduled heat up cycles, reheat operation is allowed. ▪ 2: `Schedule only`: The domestic hot water tank can ONLY be heated according to a schedule.

See the operation manual for more details.

Disinfection

Applies only to installations with a domestic hot water tank.

The disinfection function disinfects the domestic hot water tank by periodically heating the domestic hot water to a specific temperature.

CAUTION

The disinfection function settings MUST be configured by the installer according to the applicable legislation.

#	Code	Description
[5.7.1]	[2-01]	`Activation`: ▪ 0: `No` ▪ 1: `Yes`
[5.7.2]	[2-00]	`Operation day`: ▪ 0: `Every day` ▪ 1: `Monday` ▪ 2: `Tuesday` ▪ 3: `Wednesday` ▪ 4: `Thursday` ▪ 5: `Friday` ▪ 6: `Saturday` ▪ 7: `Sunday`
[5.7.3]	[2-02]	`Start time`
[5.7.4]	[2-03]	`Tank setpoint`: 60°C
[5.7.5]	[2-04]	`Duration`: 40~60 minutes

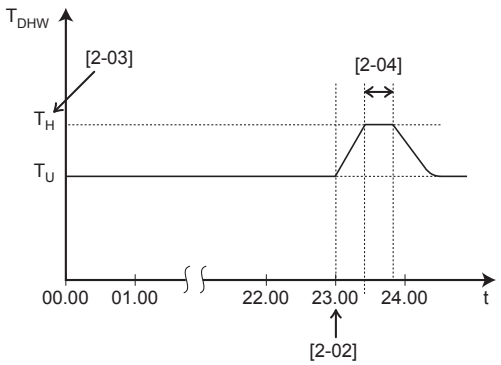

T_{DHW} Domestic hot water temperature
T_U User setpoint temperature
T_H High setpoint temperature [2-03]
t Time

WARNING

Be aware that the domestic hot water temperature at the hot water tap will be equal to the value selected in field setting [2-03] after a disinfection operation.

When the high domestic hot water temperature can be a potential risk for human injuries, a mixing valve (field supply) shall be installed at the hot water outlet connection of the domestic hot water tank. This mixing valve shall secure that the hot water temperature at the hot water tap never rise above a set maximum value. This maximum allowable hot water temperature shall be selected according to the applicable legislation.

CAUTION

Make sure that the disinfection function start time [5.7.3] with defined duration [5.7.5] is NOT interrupted by possible domestic hot water demand.

NOTICE

Disinfection mode. Even if you turn OFF tank heating operation ([C.3]: `Operation` > `Tank`), disinfection mode will remain active. However, if you turn it OFF while disinfection is running, an AH error occurs.

INFORMATION

In case of error code AH and no interruption of the disinfection function occurred due to domestic hot water tapping, following actions are recommended:

- When the `Reheat only` or `Schedule + reheat` mode is selected, it is recommended to program the start-up of the disinfection function at least 4 hours later than the last expected large hot water tapping. This start-up can be set by installer settings (disinfection function).
- When the `Schedule only` mode is selected, it is recommended to program an `Eco` action 3 hours before the scheduled start-up of the disinfection function to preheat the tank.

INFORMATION

Disinfection function is restarted in case the domestic hot water temperature drops 5°C below the disinfection target temperature within the duration time.

Maximum DHW temperature setpoint

The maximum temperature that users can select for the domestic hot water. You can use this setting to limit the temperatures at the hot water taps.

INFORMATION

During disinfection of the domestic hot water tank, the DHW temperature can exceed this maximum temperature.

INFORMATION

Limit the maximum hot water temperature according to the applicable legislation.

#	Code	Description
[5.8]	[6-0E]	`Maximum`: The maximum temperature that users can select for the domestic hot water. You can use this setting to limit the temperature at the hot water taps. The maximum temperature is NOT applicable during disinfection function. See disinfection function.

Hysteresis (heat pump ON hysteresis)

Applicable when domestic hot water preparation is reheat only. When the tank temperature drops below the reheat temperature minus the heat pump ON hysteresis temperature, the tank heats up to the reheat temperature.

To avoid too much backup heater operation, the reheat temperature minus the heat pump ON hysteresis temperature must be below 45°C.

#	Code	Description
[5.9]	[6-00]	Heat pump ON hysteresis ▪ 2°C~40°C

Hysteresis (reheat hysteresis)

Applicable when domestic hot water preparation is scheduled+reheat. When the tank temperature drops below the reheat temperature minus the reheat hysteresis temperature, the tank heats up to the reheat temperature.

#	Code	Description
[5.A]	[6-08]	Reheat hysteresis ▪ 2°C~20°C

Setpoint mode

#	Code	Description
[5.B]	N/A	`Setpoint mode`: ▪ `Fixed` ▪ `Weather dependent`

WD curve

When weather-dependent operation is active the desired tank temperature is determined automatically depending on the averaged outdoor temperature: low outdoor temperatures will result in higher desired tank temperatures as the cold water tap is colder and vice versa.

In case of `Schedule only` or `Schedule + reheat` domestic hot water preparation, the storage comfort temperature is weather-dependent (according to the weather-dependent curve), the storage economic and reheat temperature are NOT weather-dependent.

In case of `Reheat only` domestic hot water preparation, the desired tank temperature is weather-dependent (according to the weather-dependent curve). During weather-dependent operation, the end-user cannot adjust the desired tank temperature on the user interface. Also see "11.4.2 2-points curve" [▸ 152] and "11.4.3 Slope-offset curve" [▸ 153].

#	Code	Description
[5.C]	[0-0E] [0-0D] [0-0C] [0-0B]	`WD curve`: **Note:** There are 2 methods to set the weather dependent curve. See "11.4.2 2-points curve" [▸ 152] and "11.4.3 Slope-offset curve" [▸ 153] for more information about the different curve types. Both curve types require 4 field settings to be configured according to the figure below. 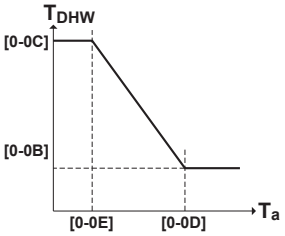 ▪ T_{DHW}: The desired tank temperature. ▪ T_a: The (averaged) outdoor ambient temperature ▪ [0-0E]: low outdoor ambient temperature: –40°C~5°C ▪ [0-0D]: high outdoor ambient temperature: 10°C~25°C ▪ [0-0C]: desired tank temperature when the outdoor temperature equals or drops below the low ambient temperature: Min(45,[6-0E])°C ?[6-0E]°C ▪ [0-0B]: desired tank temperature when the outdoor temperature equals or rises above the high ambient temperature: 35°C~[6-0E]°C

#	Code	Description
[5.C]	[0-0E] [0-0D] [0-0C] [0-0B]	WD curve: **Note:** There are 2 methods to set the weather dependent curve. See "11.4.2 2-points curve" [▶ 152] and "11.4.3 Slope-offset curve" [▶ 153] for more information about the different curve types. Both curve types require 4 field settings to be configured according to the figure below. 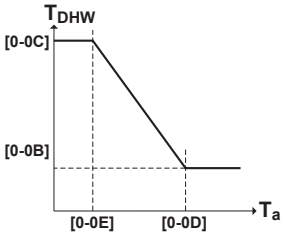 ▪ T_{DHW}: The desired tank temperature. ▪ T_a: The (averaged) outdoor ambient temperature ▪ [0-0E]: low outdoor ambient temperature: –40°C~5°C ▪ [0-0D]: high outdoor ambient temperature: 10°C~25°C ▪ [0-0C]: desired tank temperature when the outdoor temperature equals or drops below the low ambient temperature: 45°C~[6-0E]°C ▪ [0-0B]: desired tank temperature when the outdoor temperature equals or rises above the high ambient temperature: 35°C~[6-0E]°C

Margin

In domestic hot water operation, the following hysteresis value can be set for the heat pump operation:

#	Code	Description
[5.D]	[6-01]	The temperature difference determining the heat pump OFF temperature. Range: 0°C~10°C

Example: setpoint (T_U)>maximum heat pump temperature–[6-01] ($T_{HP\ MAX}$–[6-01])

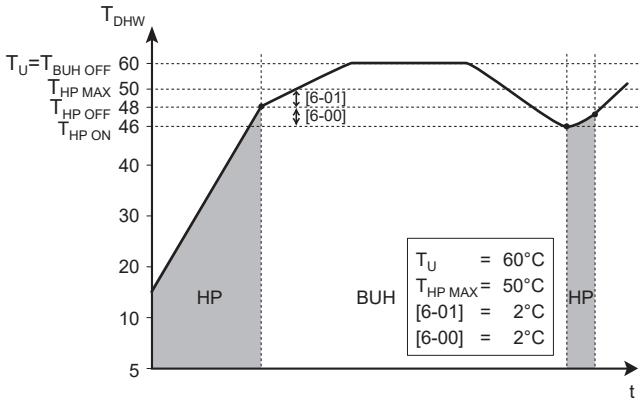

BUH Backup heater
HP Heat pump. If heating up time by the heat pump takes too long, auxiliary heating by the backup heater can take place
$T_{BUH\ OFF}$ Backup heater OFF temperature (T_U)
$T_{HP\ MAX}$ Maximum heat pump temperature at sensor in domestic hot water tank
$T_{HP\ OFF}$ Heat pump OFF temperature ($T_{HP\ MAX}$–[6-01])
$T_{HP\ ON}$ Heat pump ON temperature ($T_{HP\ OFF}$–[6-00])
T_{DHW} Domestic hot water temperature
T_U User setpoint temperature (as set on the user interface)
t Time

Example: setpoint (T_U)≤maximum heat pump temperature–[6-01] ($T_{HP\ MAX}$–[6-01])

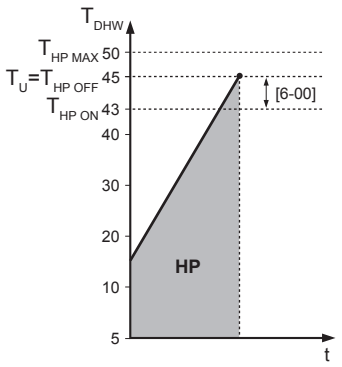

HP Heat pump. If heating up time by the heat pump takes too long, auxiliary heating by the backup heater can take place
$T_{HP\ MAX}$ Maximum heat pump temperature at sensor in domestic hot water tank
$T_{HP\ OFF}$ Heat pump OFF temperature ($T_{HP\ MAX}$–[6-01])
$T_{HP\ ON}$ Heat pump ON temperature ($T_{HP\ OFF}$–[6-00])
T_{DHW} Domestic hot water temperature
T_U User setpoint temperature (as set on the user interface)
t Time

INFORMATION

The maximum heat pump temperature depends on the ambient temperature. For more information, see the operation range.

WD curve type

There are 2 methods to define the weather-dependent curves:

- `2-points` (see "11.4.2 2-points curve" [▸ 152])
- `Slope-Offset` (see "11.4.3 Slope-offset curve" [▸ 153])

In [2.E] `WD curve type`, you can choose which method you want to use.

In [5.E] `WD curve type`, the chosen method is shown read-only (same value as in [2.E]).

#	Code	Description
[2.E] / [5.E]	N/A	▪ 0: `2-points` ▪ 1: `Slope-Offset`

11.5.7 User settings

Language

#	Code	Description
[7.1]	N/A	Language

Time/date

#	Code	Description
[7.2]	N/A	Set the local time and date

INFORMATION

By default, daylight savings time is enabled and clock format is set to 24 hours. These settings can be changed during initial configuration or via the menu structure [7.2]: `User settings` > `Time/date`.

Holiday

About holiday mode

During your holiday, you can use the holiday mode to deviate from your normal schedules without having to change them. While holiday mode is active, space heating/cooling operation and domestic hot water operation will be turned off. Room frost protection and anti-legionella operation will remain active.

Typical workflow

Using holiday mode typically consists of the following stages:

1 Activating the holiday mode.

2 Setting the starting date and ending date of your holiday.

To check if holiday mode is activated and/or running

If is displayed on the home screen, holiday mode is active.

To configure the holiday

1	Activate the holiday mode.	—
	▪ Go to [7.3.1]: `User settings` > `Holiday` > `Activation`. 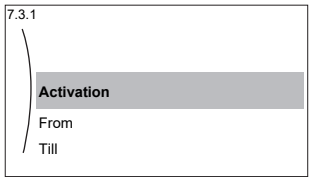	
	▪ Select On.	

2	Set the first day of your holiday.	—
	▪ Go to [7.3.2]: `From`.	
	▪ Select a date.	
	▪ Confirm the changes.	
3	Set the last day of your holiday.	—
	▪ Go to [7.3.3]: `Till`.	
	▪ Select a date.	
	▪ Confirm the changes.	

Quiet

About quiet mode

You can use quiet mode to decrease the sound of the unit. However, this also decreases the heating/cooling capacity of the system. There are multiple quiet mode levels.

The installer can:

- Completely deactivate quiet mode
- Manually activate a quiet mode level
- Enable the user to program a quiet mode schedule

If enabled by the installer, the user can program a quiet mode schedule.

INFORMATION

If the outdoor temperature is below zero, we recommend to NOT use the most quiet level.

To check if quiet mode is active

If is displayed on the home screen, quiet mode is active.

To use quiet mode

1	Go to [7.4.1]: `User settings` > `Quiet` > `Mode`.	
2	Do one of the following:	—

If you want to...	Then...	
Completely deactivate quiet mode	Select `Off`. **Result:** The unit never runs in quiet mode. The user cannot change this.	
Manually activate a quiet mode level	Select `Manual`.	
	Go to [7.4.3] `Level` and select the applicable quiet mode level. **Example:** `Most quiet`. **Result:** The unit always runs in the selected quiet mode level. The user cannot change this.	

If you want to...	Then...	
Enable the user to program a quiet mode schedule	Select `Automatic`. **Result:** The unit runs in quiet mode according to a schedule. The user (or you) can program the schedule in [7.4.2] `Schedule`. For more information about scheduling, see "11.3.7 Schedule screen: Example" [▸ 147].	

Electricity prices

Only applicable in combination with the bivalent function. See also "Bivalent" [▸ 203].

#	Code	Description
[7.5.1]	N/A	`Electricity price` > `High`
[7.5.2]	N/A	`Electricity price` > `Medium`
[7.5.3]	N/A	`Electricity price` > `Low`

INFORMATION

Electricity price can only be set when bivalent is ON ([9.C.1] or [C-02]). These values can only be set in menu structure [7.5.1], [7.5.2] and [7.5.3]. Do NOT use overview settings.

To set the electricity price

1	Go to [7.5.1]/[7.5.2]/[7.5.3]: `User settings` > `Electricity price` > `High`/`Medium`/`Low`.	
2	Select the correct electricity price.	
3	Confirm the changes.	
4	Repeat this for all three electricity prices.	—

INFORMATION

Price value ranging from 0.00~990 valuta/kWh (with 2 significant values).

INFORMATION

If no schedule is set, the `Electricity price` for `High` is taken into account.

To set the electricity price schedule timer

1	Go to [7.5.4]: `User settings` > `Electricity price` > `Schedule`.	
2	Program the selection using the scheduling screen. You can set the `High`, `Medium` and `Low` electricity prices according to your electricity supplier.	—
3	Confirm the changes.	

INFORMATION

The values correspond with the electricity price values for `High`, `Medium` and `Low` previously set. If no schedule is set, the electricity price for `High` is taken into account.

About energy prices in case of an incentive per kWh renewable energy

An incentive can be taken into account when setting the energy prices. Although the running cost can increase, the total operation cost, taking into account the reimbursement will be optimized.

NOTICE

Make sure to modify the setting of the energy prices at the end of the incentive period.

To set the electricity price in case of an incentive per kWh renewable energy

Calculate the value for the electricity price with following formula:

- Actual electricity price+Incentive/kWh

For the procedure to set the electricity price, see "To set the electricity price" [▸ 190].

Example

This is an example and the prices and/or values used in this example are NOT accurate.

Data	Price/kWh
Electricity price	12.49
Renewable heat incentive per kWh	5

Calculation of the electricity price

Electricity price=Actual electricity price+Incentive/kWh

Electricity price=12.49+5

Electricity price=17.49

Price	Value in breadcrumb
Electricity: 12.49 /kWh	[7.5.1]=17

11.5.8 Information

Dealer information

The installer can fill in his contact number here.

#	Code	Description
[8.3]	N/A	Number that users can call in case of problems.

Reset

Reset the configuration settings stored in the MMI (user interface of the indoor unit).

Example: Energy meterings, holiday settings.

INFORMATION

This does not reset the configuration settings and field settings of the indoor unit.

#	Code	Description
[8.A]	N/A	Reset the MMI EEPROM to factory default

Possible read-out information

In menu...	You can read out...
[8.1] `Energy data`	Produced energy, consumed electricity, and consumed gas
[8.2] `Malfunction history`	Malfunction history
[8.3] `Dealer information`	Contact/helpdesk number
[8.4] `Sensors`	Room, tank or domestic hot water, outside, and leaving water temperature (if applicable)
[8.5] `Actuators`	Status/mode of each actuator **Example:** Domestic hot water pump ON/OFF
[8.6] `Operation modes`	Current operation mode **Example:** Defrost/oil return mode
[8.7] `About`	Version information about the system
[8.8] `Connection status`	Information about the connection status of the unit, the room thermostat and the LAN adapter.

11.5.9 Installer settings

Configuration wizard

After first power ON of the system, the user interface will guide you using the configuration wizard. This way you can set the most important initial settings. This way the unit will be able to run properly. Afterwards, more detailed settings can be done via the menu structure if required.

To restart the configuration wizard, go to `Installer settings` > `Configuration wizard` [9.1].

Domestic hot water

Domestic hot water

The following setting determines if the system can prepare domestic hot water or not, and which tank is used. This setting is read only.

#	Code	Description
[9.2.1]	[E-05][a] [E-06][a] [E-07][a]	▪ `No DHW` (domestic hot water) ▪ `Integrated` The backup heater will also be used for domestic hot water heating.

[a] Use the menu structure instead of the overview settings. Menu structure setting [9.2.1] replaces the following 3 overview settings:
- [E-05]: Can the system prepare domestic hot water?
- [E-06]: Is a domestic hot water tank installed in the system?
- [E-07]: What kind of domestic hot water tank is installed?

DHW pump

#	Code	Description
[9.2.2]	[D-02]	`DHW pump`: ▪ 0: `No DHW pump`: NOT installed ▪ 1: `Instant hot water`: Installed for instant hot water when water is tapped. The user sets the operation timing of the domestic hot water pump using the schedule. Control of this pump is possible with the user interface. ▪ 2: `Disinfection`: Installed for disinfection. It runs when the disinfection function of the domestic hot water tank is running. No further settings are needed.

See also:

- "6.4.4 DHW pump for instant hot water" [▸ 47]
- "6.4.5 DHW pump for disinfection" [▸ 47]

DHW pump schedule

Program a schedule for the DHW pump **(only for field supplied domestic hot water pump for secondary return).**

Program a domestic hot water pump schedule to determine when to turn on and off the pump.

When turned on, the pump runs and makes sure hot water is instantly available at the tap. To save energy, only turn on the pump during periods of the day when instant hot water is necessary.

Backup heater

Besides the type of backup heater, the voltage, configuration and capacity must be set on the user interface.

The capacities for the different steps of the backup heater must be set for the energy metering and/or power consumption feature to work properly. When measuring the resistance value of each heater, you can set the exact heater capacity and this will lead to more accurate energy data.

Backup heater type

The backup heater is adapted to be connected to most common European electricity grids. The type of backup heater can be viewed but not changed.

#	Code	Description
[9.3.1]	[E-03]	▪ 4: `9W`

Voltage

Depending on how the backup heater is connected to the grid and what voltage is supplied, the correct value needs to be set. In either configuration, the backup heater will operate in steps of 1 kW.

#	Code	Description
[9.3.2]	[5-0D]	▪ 0: `230V, 1ph` ▪ 2: `400V, 3ph`

The available capacity of the backup heater is determined based on the `Voltage` setting:

[5-0D]	Normal operation	Emergency or Compressor forced off
0: `230V, 1ph`	3 kW	▪ 6 kW
2: `400V, 3ph`	6 kW	▪ 9 kW

See "Emergency" [▶ 195] for more information about `Emergency` operation and `Compressor forced off` mode.

Equilibrium

#	Code	Description
[9.3.6]	[5-00]	`Equilibrium`: Deactivate backup heater (or external backup heat source in case of a bivalent system) above the equilibrium temperature for space heating? ▪ 0: `No` ▪ 1: `Yes`
[9.3.7]	[5-01]	`Equilibrium temperature`: Outdoor temperature below which operation of the backup heater (or external backup heat source in case of a bivalent system) is allowed. Range: –15°C~35°C

Operation

#	Code	Description
[9.3.8]	[4-00]	Backup heater operation: ▪ 0: `Restricted` ▪ 1: `Allowed` ▪ 2: `Only DHW`: Backup heater operation is enabled for domestic hot water and disabled for space heating.

INFORMATION

When heating of the DHW by the heat pump is too slow, it may affect a comfortable operation of the space heating/cooling circuit. If so, allow the backup heater to assist during DHW operation by setting [4-00]=1 or 2.

Maximum capacity

During normal operation the maximum capacity is:

- 3 kW for a 230 V, 1N~ unit
- 6 kW for a 400 V, 3N~ unit

The maximum capacity of the backup heater can be limited. The set value depends on the used voltage (see table below) and is then the maximum capacity during emergency operation.

#	Code	Description
[9.3.5]	[4-07][(a)]	0~6 kW when voltage is set to 230 V, 1N~ 0~9 kW when voltage is set to 400 V, 3N~

[a] If the value [4-07] is set lower, then the lowest value will be used in all operation modes.

Emergency

Emergency

When the heat pump fails to operate, the backup heater can serve as an emergency heater. It then takes over the heat load either automatically or by manual interaction.

- When **Emergency** is set to **Automatic** and a heat pump failure occurs, the backup heater automatically takes over the domestic hot water production and space heating.
- When **Emergency** is set to **Manual** and a heat pump failure occurs, the domestic hot water heating and space heating stops.

  To manually recover it via the user interface, go to the **Malfunctioning** main menu screen and confirm whether the backup heater can take over the heat load or not.
- Alternatively, when **Emergency** is set to:
  - **auto SH reduced/DHW on**, space heating is reduced but domestic hot water is still available.
  - **auto SH reduced/DHW off**, space heating is reduced and domestic hot water is NOT available.
  - **auto SH normal/DHW off**, space heating operates as normally but domestic hot water is NOT available.

  Similarly as in **Manual** mode, the unit can take the full load with the backup heater if the user activates this via the **Malfunctioning** main menu screen.

To keep energy consumption low, we recommend to set **Emergency** to **auto SH reduced/DHW off** if the house is unattended for longer periods.

#	Code	Description
[9.5.1]	N/A	▪ 0: **Manual** ▪ 1: **Automatic** ▪ 2: **auto SH reduced/DHW on** ▪ 3: **auto SH reduced/DHW off** ▪ 4: **auto SH normal/DHW off**

INFORMATION

If a heat pump failure occurs and **Emergency** is not set to **Automatic** (setting 1), the room frost protection function, the underfloor heating screed dryout function, and the water pipe antifreeze function will remain active even if the user does NOT confirm emergency operation.

Compressor forced off

Compressor forced off mode can be activated to only allow the backup heater to provide domestic hot water and space heating. This is, for example, useful when the brine circuit is not yet ready to be used. When this mode is activated:

- Heat pump operation is NOT possible
- Cooling is NOT possible

#	Code	Description
[9.5.2]	[7-06]	Activation of the `Compressor forced off` mode: ▪ 0: `disabled` ▪ 1: `enabled`

NOTICE

Activating `Compressor forced off` mode will NOT stop or prevent the brine pump from operating in the following conditions:

- `10 day brine pump operation` is active
- The `Brine pump` test run has been started
- Passive cooling is active

Balancing

Priorities

For systems with an integrated domestic hot water tank.

#	Code	Description
[9.6.1]	[5-02]	`Space heating priority`: Defines whether backup heater will assist the heat pump during domestic hot water operation. For optimal operation and lowest power consumption, it is strongly recommended to keep the default setting (**0**). If the backup heater operation is limited ([4-00]=0) and the outdoor temperature is lower than setting [5-03], the domestic hot water will not be heated with the backup heater.
[9.6.2]	[5-03]	`Priority temperature`: Used for calculation of anti-recycling timer. If [5-02]=1, it defines the outdoor temperature below which the backup heater will assist during domestic hot water heating. [5-01] Equilibrium temperature and [5-03] Space heating priority temperature are related to backup heater. So, you must set [5-03] equal or a few degrees higher than [5-01].

Timers

For simultaneous space and domestic hot water operation request.

[8-02]: `Anti-recycle timer`

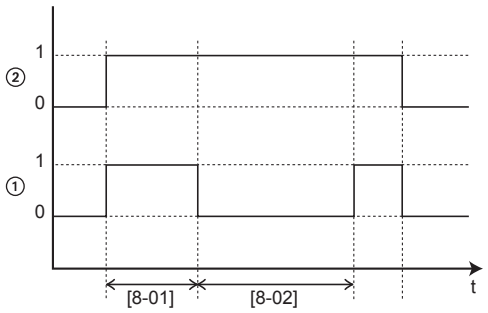

1 Heat pump domestic water heating mode (1=active, 0=not active)
2 Hot water request for heat pump (1=request, 0=no request)
t Time

[8-04]: `Additional timer` at [4-02]/[F-01]

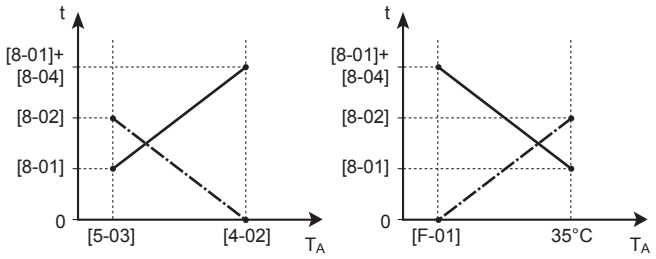

T_A Ambient (outdoor) temperature
t Time
`Anti-recycle timer`
Maximum running time domestic hot water

#	Code	Description
[9.6.4]	[8-02]	`Anti-recycle timer`: Minimum time between two cycles for domestic hot water. The actual anti-recycling time also depends on setting [8-04]. Range: 0~10 hours **Remark:** The minimum time is 0.5 hours even when the selected value is 0.
[9.6.5]	[8-00]	`Minimum running timer`: Do NOT change.
[9.6.6]	[8-01]	`Maximum running timer` for domestic hot water operation. Domestic hot water heating stops even when the target domestic hot water temperature is NOT reached. The actual maximum running time also depends on setting [8-04]. ▪ When `Control=Room thermostat`: This preset value is only taken into account if there is a request for space heating or cooling. If there is NO request for space heating/cooling, the tank is heated until the setpoint has been reached. ▪ When `Control≠Room thermostat`: This preset value is always taken into account. Range: 5~95 minutes **Remark:** It is NOT allowed to set [8-01] to a value below 10 minutes.

#	Code	Description
[9.6.7]	[8-04]	`Additional timer`: Additional running time for the maximum running time depending on the outdoor temperature [4-02] or [F-01]. Range: 0~95 minutes

Water pipe freeze prevention

Only relevant for installations with water piping outdoors. This function tries to protect outdoor water piping from freezing.

#	Code	Description
[9.7]	[4-04]	`Water pipe freeze prevention`: ▪ 2: `Off` (read only)

Benefit kWh power supply

INFORMATION

The preferential kWh rate power supply contact is connected to the same terminals (X5M/9+10) as the safety thermostat. Thus, the system can have EITHER preferential kWh rate power supply OR a safety thermostat.

#	Code	Description
[9.8.1]	[D-01]	Connection to a `Benefit kWh power supply` or a `Safety thermostat`: ▪ 0 `No`: The outdoor unit is connected to a normal power supply. ▪ 1 `Open`: The outdoor unit is connected to a preferential kWh rate power supply. When the preferential kWh rate signal is sent by the electricity company, the contact will open and the unit will go in forced off mode. When the signal is released again, the voltage-free contact will close and the unit will restart operation. Therefore, always enable the auto restart function. ▪ 2 `Closed`: The outdoor unit is connected to a preferential kWh rate power supply. When the preferential kWh rate signal is sent by the electricity company, the contact will close and the unit will go in forced off mode. When the signal is released again, the voltage-free contact will open and the unit will restart operation. Therefore, always enable the auto restart function. ▪ 3 `Safety thermostat`: A safety thermostat is connected to the system (normal closed contact)

#	Code	Description
[9.8.2]	[D-00]	`Allow heater`: Which heaters are allowed to operate during preferential kWh rate power supply? ▪ 0 **No**: None ▪ 1 `Only BSH`: Booster heater only ▪ 2 `Only BUH`: Backup heater only ▪ 3 `All`: All heaters See table below. Setting 2 is only meaningful if the preferential kWh rate power supply is of type 1 or indoor unit is connected to a normal kWh rate power supply (via X2M/5-6) and the backup heater is NOT connected to the preferential kWh rate power supply.
[9.8.3]	[D-05]	`Allow pump`: ▪ 0 **No**: Pump is forced off ▪ 1 `Yes`: No limitation

Allowed heaters during preferential kWh rate power supply

Do NOT use 1 or 3. Setting [D-00] to 1 or 3 when [D-01] is set to 1 or 2 will reset [D-00] back to 0, as the system does not have a booster heater. Only set [D-00] to the values in the table below:

[D-00]	Backup heater	Compressor
0	Forced OFF	Forced OFF
2	Allowed	

Power consumption control

Power consumption control

See "6 Application guidelines" [▸ 29] for detailed information about this functionality.

#	Code	Description
[9.9.1]	[4-08]	`Power consumption control`: ▪ 0 **No**: Disabled. ▪ 1 `Continuous`: Enabled: You can set one power limitation value (in A or kW) to which the system power consumption will be limited for all the time. ▪ 2 `Inputs`: Enabled: You can set up to four different power limitation values (in A or kW) to which the system power consumption will be limited when the corresponding digital input asks. ▪ 3 `Current sensor`: Enabled: You can set a current limitation value (in A) to which the household current will be limited.

Continuous power consumption control and power consumption control with digital inputs

The type of limit needs to be set in combination with the continuous power consumption control and the power consumption control with digital inputs.

#	Code	Description
[9.9.2]	[4-09]	`Type`: ▪ 0 **`Amp`**: The limitation values are set in A. ▪ 1 **`kW`**: The limitation values are set in kW.

Limit when [9.9.1]=`Continuous` and [9.9.2]=**`Amp`**:

#	Code	Description
[9.9.3]	[5-05]	**`Limit`**: Only applicable in case of full time current limitation mode. 0 A~50 A

Limits when [9.9.1]=`Inputs` and [9.9.2]=**`Amp`**:

#	Code	Description
[9.9.4]	[5-05]	**`Limit 1`**: 0 A~50 A
[9.9.5]	[5-06]	**`Limit 2`**: 0 A~50 A
[9.9.6]	[5-07]	**`Limit 3`**: 0 A~50 A
[9.9.7]	[5-08]	**`Limit 4`**: 0 A~50 A

Limit when [9.9.1]=`Continuous` and [9.9.2]=**`kW`**:

#	Code	Description
[9.9.8]	[5-09]	**`Limit`**: Only applicable in case of full time power limitation mode. 0 kW~20 kW

Limits when [9.9.1]=`Inputs` and [9.9.2]=**`kW`**:

#	Code	Description
[9.9.9]	[5-09]	**`Limit 1`**: 0 kW~20 kW
[9.9.A]	[5-0A]	**`Limit 2`**: 0 kW~20 kW
[9.9.B]	[5-0B]	**`Limit 3`**: 0 kW~20 kW
[9.9.C]	[5-0C]	**`Limit 4`**: 0 kW~20 kW

Power consumption control via current sensors

Limit when [9.9.1]=`Current sensor`:

#	Code	Description
[9.9.3]	[5-05]	Limit: 0 A~50 A

In case the current sensors are calibrated, you can specify an offset for the output of the current sensors. This value will be added to the current output value of the current sensor.

#	Code	Description
[9.9.E]	[4-0E]	`Current sensor offset`: Offset on the household current measured by the current sensors. –6 A~6 A, step 0.5 A

Priority heater

This setting defines the priority of the electrical heaters depending on applicable limitation. As no booster heater is present, the backup heater will always be prioritised.

#	Code	Description
[9.9.D]	[4-01]	`Priority heater`: ▪ 0 `None` : The backup heater is prioritised. ▪ 1 `Booster heater`: After restart, the setting will be reverted back to 0=`None` and the backup heater will be prioritised. ▪ 2 `Backup heater`: The backup heater is prioritised.

Energy metering

Energy metering

If energy metering is performed by the use of external power meters, configure the settings as described below. Select the pulse frequency output of each power meter in accordance with the power meter specifications. It is possible to connect up to 2 power meters with different pulse frequencies. If only 1 or no power meter is used, select '`None`' to indicate the corresponding pulse input is NOT used.

#	Code	Description
[9.A.1]	[D-08]	`Electricity meter 1`: ▪ 0 `None`: NOT installed ▪ 1 `1/10kWh`: Installed ▪ 2 `1/kWh`: Installed ▪ 3 `10/kWh`: Installed ▪ 4 `100/kWh`: Installed ▪ 5 `1000/kWh`: Installed
[9.A.2]	[D-09]	`Electricity meter 2`: ▪ 0 `None`: NOT installed ▪ 1 `1/10kWh`: Installed ▪ 2 `1/kWh`: Installed ▪ 3 `10/kWh`: Installed ▪ 4 `100/kWh`: Installed ▪ 5 `1000/kWh`: Installed

Sensors

External sensor

#	Code	Description
[9.B.1]	[C–08]	`External sensor`: When an optional external ambient sensor is connected, the type of the sensor must be set. ▪ 0 `None` : NOT installed. The thermistor in the dedicated Human Comfort Interface and in the outdoor unit are used for measurement. ▪ 1 `Outdoor`: Connected to PCB of the indoor unit measuring the **outdoor temperature**. **Remark:** For some functionality, the temperature sensor in the outdoor unit is still used. ▪ 2 `Room`: Connected to PCB of the indoor unit measuring the **indoor temperature**. The temperature sensor in the dedicated Human Comfort Interface is NOT used anymore. **Remark:** This value has only meaning in room thermostat control.

Ext. amb. sensor offset

ONLY applicable in case an external outdoor ambient sensor is connected and configured.

You can calibrate the external outdoor ambient temperature sensor. It is possible to give an offset to the thermistor value. This setting can be used to compensate for situations where the external outdoor ambient sensor cannot be installed on the ideal installation location.

#	Code	Description
[9.B.2]	[2-0B]	`Ext. amb. sensor offset`: Offset on the ambient temperature measured on the external outdoor temperature sensor. ▪ –5°C~5°C, step 0.5°C

Averaging time

The average timer corrects the influence of ambient temperature variations. The weather-dependent setpoint calculation is done on the average outdoor temperature.

The outdoor temperature is averaged over the selected time period.

#	Code	Description
[9.B.3]	[1-0A]	`Averaging time`: ▪ 0: No averaging ▪ 1: 12 hours ▪ 2: 24 hours ▪ 3: 48 hours ▪ 4: 72 hours

Brine low pressure switch

When a brine low pressure switch is installed, the unit must be configured to work with the switch. When the switch is removed or disconnected, this setting must be set to OFF.

#	Code	Description
N/A	[C-0B]	Activation of the brine low pressure switch ▪ 0: OFF ▪ 1: On

Bivalent

Bivalent

Only applicable in case of auxiliary boiler.

NOTICE

Bivalent operation is only possible if:

- Space heating is turned ON, and
- DHW tank operation is turned OFF.

INFORMATION

Bivalent is only possible in case of 1 leaving water temperature zone with:

- room thermostat control, OR
- external room thermostat control.

About bivalent

The purpose of this function is to determine which heating source can/will provide the space heating, either the heat pump system or the auxiliary boiler.

#	Code	Description
[9.C.1]	[C-02]	`Bivalent`: Indicates if the space heating is also performed by means of another heat source than the system. ▪ 0 `No`: Not installed ▪ 1 `Yes`: Installed. The auxiliary boiler (gas boiler, oil burner) will operate in space heating when the outdoor ambient temperature is low. During bivalent operation, the heat pump will run in domestic hot water operation when tank heat-up is required, or is turned OFF. Set this value in case an auxiliary boiler is used.

- If `Bivalent` is enabled: When the outdoor temperature drops below the bivalent ON temperature (fixed or variable based on energy prices), the space heating by the heat pump stops automatically and the permission signal for the auxiliary boiler is active.
- If `Bivalent` is disabled: Space heating is only done by the heat pump within the operation range. The permission signal for the auxiliary boiler is always inactive.

The switch-over between the heat pump system and the auxiliary boiler is based on the following settings:

- [C-03] and [C-04]

- Electricity price: [7.5.1], [7.5.2], [7.5.3]
- Gas price: [7.6]

[C-03], [C-04], and T_{calc}

Based on the settings above, the heat pump system calculates a value T_{calc}, which is variable between [C-03] and [C-03]+[C-04].

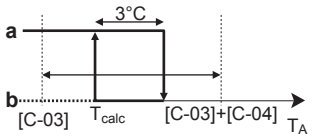

T_A Outdoor temperature
T_{calc} Bivalent ON temperature (variable). Below this temperature, the auxiliary boiler will always be ON. T_{calc} can never go below [C-03] or above [C-03]+[C-04].
3°C Fixed hysteresis to prevent too much switching between heat pump system and auxiliary boiler
a Auxiliary boiler active
b Auxiliary boiler inactive

If the outdoor temperature…	Then…	
	Space heating by the heat pump system…	Bivalent signal for the auxiliary boiler is…
Drops below T_{calc}	Stops	Active
Rises above T_{calc}+3°C	Starts	Inactive

INFORMATION

The permission signal for the auxiliary boiler is located on the EKRP1HBAA (digital I/O PCB). When it is activated, the contact X1, X2 is closed and open when it is deactivated. See illustration below for the schematic location of this contact.

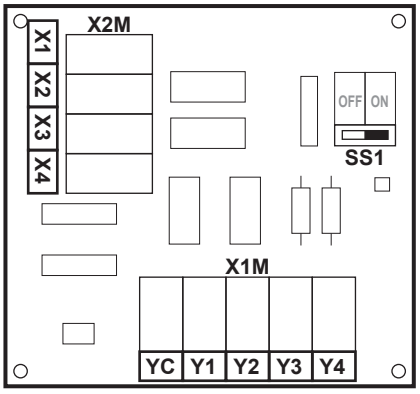

#	Code	Description
9.C.3	[C-03]	Range: –25°C~25°C (step: 1°C)
9.C.4	[C-04]	Range: 2°C~10°C (step: 1°C) The higher the value of [C-04], the higher the accuracy of the switch-over between the heat pump system and the auxiliary boiler.

To determine the value of [C-03], proceed as follows:

1 Determine the COP (= coefficient of performance) using the formula:

Formula	Example
COP = (Electricity price / gas price)[a] × boiler efficiency	If: ▪ Electricity price: 20 c€/kWh ▪ Gas price: 6 c€/kWh ▪ Boiler efficiency: 0.9 Then: COP = (20/6)×0.9 = **3**

[a] Make sure to use the same units of measurement for the electricity price and gas price (example: both c€/kWh).

2 Determine the value of [C-03] using the graph. For an example, see the table legend.

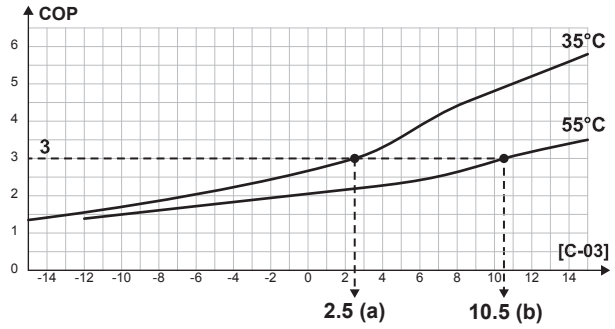

a [C-03]=2.5 in case of COP=3 and LWT=35°C
b [C-03]=10.5 in case of COP=3 and LWT=55°C

NOTICE

Make sure to set the value of [5-01] at least 1°C higher than the value of [C-03].

Electricity prices

INFORMATION

Electricity price can only be set when bivalent is ON ([9.C.1] or [C-02]). These values can only be set in menu structure [7.5.1], [7.5.2] and [7.5.3]. Do NOT use overview settings.

INFORMATION

Solar panels. If solar panels are used, set the electricity price value very low to promote the use of the heat pump.

#	Code	Description
[7.5.1]	N/A	`User settings > Electricity price > High`
[7.5.2]	N/A	`User settings > Electricity price > Medium`
[7.5.3]	N/A	`User settings > Electricity price > Low`

Boiler efficiency

Depending on the used boiler, this should be chosen as follows:

#	Code	Description
[9.C.2]	[7-05]	▪ 0: `Very high` ▪ 1: `High` ▪ 2: `Medium` ▪ 3: `Low` ▪ 4: `Very low`

Alarm output

Alarm output

#	Code	Description
[9.D]	[C–09]	`Alarm output`: Indicates the logic of alarm output on digital I/O PCB during high level indoor unit error malfunctioning. Low level errors (caution/warning) will NOT be transmitted to alarm output. ▪ 0 `Abnormal`: The alarm output will be powered when an alarm occurs. By setting this value, a distinction is made between the detection of an alarm, and the detection of a power failure. ▪ 1 `Normal`: The alarm output will NOT be powered when an alarm occurs. See also table below (Alarm output logic).

Alarm output logic

[C-09]	Alarm	No alarm	No power supply to unit
0	Closed output	Open output	Open output
1	Open output	Closed output	

Auto restart

Auto restart

When power returns after a power supply failure, the auto restart function reapplies the user interface settings at the time of the power failure. Therefore, it is recommended to always enable the function.

If the preferential kWh rate power supply is of the type that power supply is interrupted, always enable the auto restart function. Continuous indoor unit control can be guaranteed independent of the preferential kWh rate power supply status, by connecting the indoor unit to a separate normal kWh rate power supply.

#	Code	Description
[9.E]	[3-00]	`Auto restart`: ▪ 0: `Manual` ▪ 1: `Automatic`

Disable protections

INFORMATION

Protective functions – "Installer-on-site mode". The software is equipped with protective functions, such as room antifrost. The unit automatically runs these functions when necessary.

During installation or service this behaviour is undesired. Therefore, the protective functions can be disabled:

- **At first power-on:** The protective functions are disabled by default. After 36 h they will be automatically enabled.
- **Afterwards:** An installer can manually disable the protective functions by setting [9.G]: `Disable protections`=`Yes`. After his work is done, he can enable the protective functions by setting [9.G]: `Disable protections`=`No`.

#	Code	Description
[9.G]	N/A	`Disable protections`: ▪ 0: `No` ▪ 1: `Yes`

Brine freezing temperature

Brine freezing temperature

Depending on the type and concentration of the anti-freeze in the brine system, the freezing temperature will differ. The following parameters set the units freeze up prevention limit temperature. To allow for temperature measurement tolerances, the brine concentration MUST resist to a lower temperature than the defined setting.

General rule: the units freeze up prevention limit temperature MUST be 10°C lower than the minimum possible brine inlet temperature for the unit.

Example: When the minimum possible brine inlet temperature in a certain application is –2°C, then the unit freeze up prevention limit temperature MUST be set to –12°C or lower. Result will be that the brine mixture may NOT freeze above that temperature. To prevent freezing of the unit, check the type and concentration of the brine carefully.

#	Code	Description
[9.M]	[A-04]	`Brine freezing temperature`: ▪ 0: 2°C ▪ 1: –2°C ▪ 2: –4°C ▪ 3: –6°C ▪ 4: –9°C ▪ 5: –12°C ▪ 6: –15°C ▪ 7: –18°C

NOTICE

The `Brine freezing temperature` setting can be modified and read out in [9.M].

After changing the setting in [9.M] or in the field settings overview [9.I], wait 10 seconds before restarting the unit via the user interface to ensure that the setting is correctly saved in the memory.

This setting can ONLY be modified if the communication between hydro module and compressor module is present. The communication between hydro module and compressor module is NOT guaranteed and/or applicable if:

- error "U4" appears on the user interface,
- the heat pump module is connected to preferential kWh rate power supply where power supply is interrupted and preferential kWh rate power supply is activated.

Overview field settings

Almost all settings can be done using the menu structure. If for any reason it is required to change a setting using the overview settings, then the overview settings can be accessed in the field settings overview [9.I]. See "To modify an overview setting" [▸ 139].

11.5.10 Operation

To enable or disable functionalities

In the operation menu, you can separately enable or disable functionalities of the unit.

#	Code	Description
[C.1]	N/A	`Room`: ▪ 0: `Off` ▪ 1: `On`
[C.2]	N/A	`Space heating/cooling`: ▪ 0: `Off` ▪ 1: `On`
[C.3]	N/A	`Tank`: ▪ 0: `Off` ▪ 1: `On`

11.6 Menu structure: Overview user settings

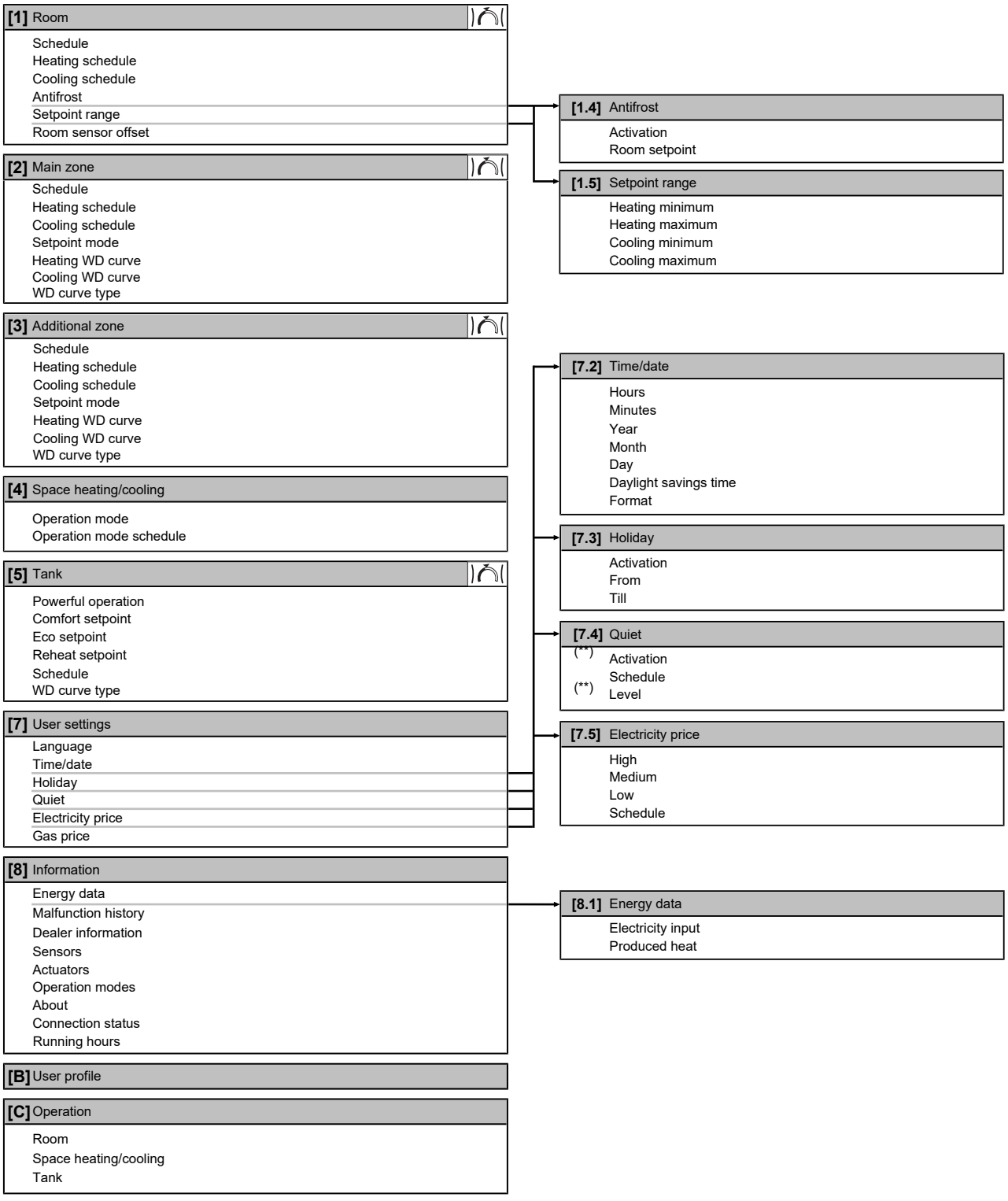

Setpoint screen
(*) Not applicable
(**) Only accessible by installer

INFORMATION

Depending on the selected installer settings and unit type, settings will be visible/ invisible.

11.7 Menu structure: Overview installer settings

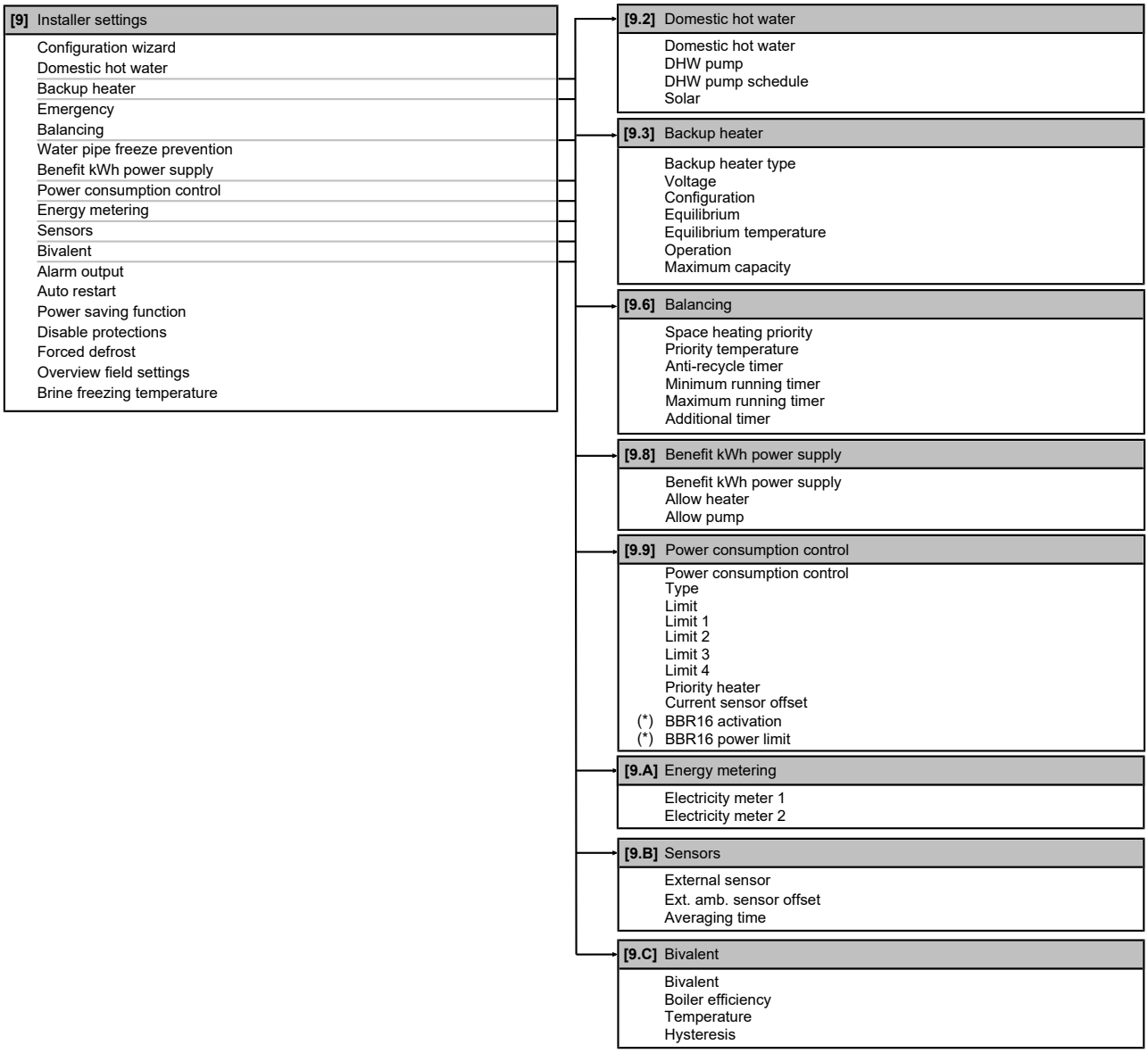

(*) Only applicable in Swedish language.

INFORMATION

Depending on the selected installer settings and unit type, settings will be visible/ invisible.

12 Commissioning

NOTICE

Make sure that both the domestic hot water tank and the space heating circuit are filled before turning on the power of the unit.

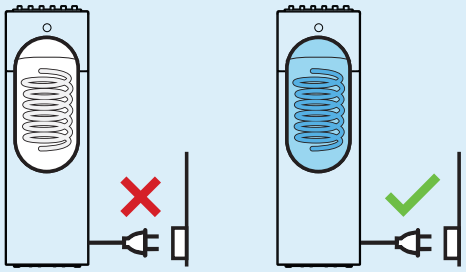

If not filled before turning on power, and in case `Emergency` is active, the backup heater thermal fuse may blow. To avoid breakdown of the backup heater, fill the unit before turning on power.

INFORMATION

Protective functions – "Installer-on-site mode". The software is equipped with protective functions, such as room antifrost. The unit automatically runs these functions when necessary.

During installation or service this behaviour is undesired. Therefore, the protective functions can be disabled:

- **At first power-on:** The protective functions are disabled by default. After 36 h they will be automatically enabled.
- **Afterwards:** An installer can manually disable the protective functions by setting [9.G]: `Disable protections`=`Yes`. After his work is done, he can enable the protective functions by setting [9.G]: `Disable protections`=`No`.

In this chapter

12.1 Overview: Commissioning 211
12.2 Precautions when commissioning 212
12.3 Checklist before commissioning 212
12.4 Checklist during commissioning 213
12.4.1 Air purge function on the water circuit 213
12.4.2 Air purge function on the brine circuit 215
12.4.3 To perform an operation test run 216
12.4.4 To perform an actuator test run 216
12.4.5 Underfloor heating screed dryout 218
12.4.6 To start or stop 10-day brine pump operation 221

12.1 Overview: Commissioning

This chapter describes what you have to do and know to commission the system after it is installed and configured.

Typical workflow

Commissioning typically consists of the following stages:

1 Checking the “Checklist before commissioning”.
2 Performing an air purge on the water circuit.
3 Performing an air purge on the brine circuit.
4 Performing a test run for the system.
5 If necessary, performing a test run for one or more actuators.
6 If necessary, performing an underfloor heating screed dryout.

12.2 Precautions when commissioning

INFORMATION

During the first running period of the unit, the required power may be higher than stated on the nameplate of the unit. This phenomenon is caused by the compressor, that needs a continuous run time of 50 hours before reaching smooth operation and stable power consumption.

NOTICE

ALWAYS operate the unit with thermistors and/or pressure sensors/switches. If NOT, burning of the compressor might be the result.

12.3 Checklist before commissioning

1 After the installation of the unit, check the items listed below.

2 Close the unit.

3 Power up the unit.

☐	You read the complete installation instructions, as described in the **installer reference guide**.
☐	The **indoor unit** is properly mounted.
☐	The following **field wiring** has been carried out according to this document and the applicable legislation: ▪ Between the local supply panel and the indoor unit ▪ Between the indoor unit and the valves (if applicable) ▪ Between the indoor unit and the room thermostat (if applicable)
☐	The system is properly **earthed** and the earth terminals are tightened.
☐	The **fuses** or locally installed protection devices are installed according to this document, and have NOT been bypassed.
☐	The **power supply voltage** matches the voltage on the identification label of the unit.
☐	There are NO **loose connections** or damaged electrical components in the switch box.
☐	There are NO **damaged components** or **squeezed pipes** on the inside of the indoor unit.
☐	**Backup heater circuit breaker** F1B (field supply) is turned ON.
☐	The correct pipe size is installed and the **pipes** are properly insulated.
☐	There is NO **water and/or brine leak** inside the indoor unit.

☐	There are no **odour traces** noticeable of the used brine.
☐	The **air purge** valve is open (at least 2 turns).
☐	The **pressure relief valve** purges water when opened. Clean water MUST come out.
☐	The **shut-off valves** are properly installed and fully open.
☐	The **domestic hot water tank** is filled completely.
☐	The **brine circuit** and **water circuit** are filled correctly.

NOTICE

When the brine circuit is not ready to be used, the system can be set to `Compressor forced off` mode. To do this, set [9.5.2]=1 (`Compressor forced off` = `enabled`).

Space heating and domestic hot water are then provided by the backup heater. Cooling is NOT possible when this mode is active. All commissioning related to or making use of the brine circuit should NOT be performed until the brine circuit is filled and `Compressor forced off` is deactivated.

12.4 Checklist during commissioning

☐	To perform an **air purge** on the water circuit.
☐	To perform an **air purge on the brine circuit** via brine pump test run or 10-day brine operation function.
☐	To perform a **test run**.
☐	To perform an **actuator test run**.
☐	**Underfloor screed dryout function** The underfloor screed dryout function is started (if necessary).
☐	To start **10-day brine pump operation.**

12.4.1 Air purge function on the water circuit

When commissioning and installing the unit, it is very important to remove all air in the water circuit. When the air purge function is running, the pump operates without actual operation of the unit and the remove of air in the water circuit will start.

NOTICE

Before starting the air purge, open the safety valve and check if the circuit is sufficiently filled with water. Only if water escapes the valve after opening it, you can start the air purge procedure.

There are 2 modes to purge air:

- Manually: the unit will operate with a fixed pump speed and in a fixed or custom position of the 3-way valve. The custom position of the 3-way valve is a helpful feature to remove all air from the water circuit in space heating or domestic hot water heating mode. The operation speed of the pump (slow or quick) can also be set.

- Automatic: the unit change automatically the pump speed and the position of the 3-way valve between space heating or domestic hot water heating mode.

Typical workflow

> **INFORMATION**
>
> Start by performing a manual air purge. When almost all the air is removed, perform an automatic air purge. If necessary, repeat performing the automatic air purge until you are sure that all air is removed from the system. During air purge function, pump speed limitation [9-0D] is NOT applicable.

Make sure that the leaving water temperature home page, room temperature home page, and domestic hot water home page are turned OFF.

The air purge function stops automatically after 30 minutes.

To perform a manual air purge

Conditions: Make sure all operation is disabled. Go to [C]: `Operation` and turn off `Room`, `Space heating/cooling` and `Tank` operation.

1	Set the user permission level to `Installer`. See "To change the user permission level" [▶ 138].	—
2	Go to [A.3]: `Commissioning` > `Air purge`.	
3	In the menu, set `Type` = `Manual`.	
4	Select `Start air purge`.	
5	Select **OK** to confirm. **Result:** The air purge starts. It stops automatically when ready.	
6	During manual operation: ▪ You can change the pump speed. ▪ You must change the circuit. To change these settings during the air purge, open the menu and go to [A.3.1.5]: `Settings`.	
	▪ Scroll to `Circuit` and set it to `Space`/`Tank`.	
	▪ Scroll to `Pump speed` and set it to `Low`/`High`.	
7	To stop the air purge manually:	—
	1 Open the menu and go to `Stop air purge`.	
	2 Select **OK** to confirm.	

To perform an automatic air purge

Conditions: Make sure all operation is disabled. Go to [C]: `Operation` and turn off `Room`, `Space heating/cooling` and `Tank` operation.

1	Set the user permission level to `Installer`. See "To change the user permission level" [▶ 138].	—
2	Go to [A.3]: `Commissioning` > `Air purge`.	
3	In the menu, set `Type` = `Automatic`.	
4	Select `Start air purge`.	

5	Select **OK** to confirm. **Result:** The air purge starts. It stops automatically when done.		
6	To stop the air purge manually:		—
	1	In the menu, go to `Stop air purge`.	
	2	Select **OK** to confirm.	

12.4.2 Air purge function on the brine circuit

When installing and commissioning the unit, it is very important to remove all air from the brine circuit.

NOTICE

It is required that the brine circuit is filled BEFORE the brine pump test run is activated.

There are 2 ways to perform an air purge:

- with a brine filling station (field supply),
- with a brine filling station (field supply) in combination with the unit's own brine pump.

In both cases, follow the instructions included with the brine filling station. The second method should only be used when the air purge on the brine circuit was NOT successful using only a brine filling station.

In case a brine buffer vessel is present in the brine circuit, or if the brine circuit consists of a horizontal loop instead of a vertical borehole, further air purging may be required. You can make use of the `10 day brine pump operation`. See "12.4.6 To start or stop 10-day brine pump operation" [▸ 221] for more information.

To perform an air purge with a brine filling station

Follow the instructions included with the brine filling station (field supply).

To perform an air purge with the brine pump and a brine filling station

Prerequisite: Performing an air purge on the brine circuit was NOT successful using a brine filling station only (see "To perform an air purge with a brine filling station" [▸ 215]). In this case, use a brine filling station and the unit's own brine pump simultaneously.

1. Fill the brine circuit.
2. Start the brine pump test run.
3. Start the brine filling station (MUST be started within a time frame of 5~60 seconds after starting the brine pump test run).

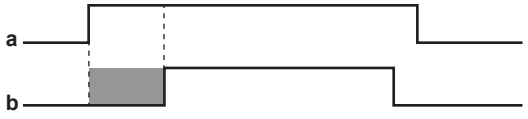

a Brine pump test run
b Brine filling station
Time frame of 5~60 seconds

Result: The brine pump test run starts running, starting the removal of air from the brine circuit. During the test run, the brine pump operates without actual operation of the unit.

> **INFORMATION**
>
> For details on starting/stopping the brine pump test run, see "12.4.4 To perform an actuator test run" [▶ 216].

The brine pump test run stops automatically after 2 hours.

12.4.3 To perform an operation test run

Conditions: Make sure all operation is disabled. Go to [C]: `Operation` and turn off `Room`, `Space heating/cooling` and `Tank` operation.

1	Set the user permission level to `Installer`. See "To change the user permission level" [▶ 138].	—
2	Go to [A.1]: `Commissioning` > `Operation test run`.	
3	Select a test from the list. **Example:** `Heating`.	
4	Select **OK** to confirm. **Result:** The test run starts. It stops automatically when ready (±30 min).	
	To stop the test run manually:	—
	1 In the menu, go to `Stop test run`.	
	2 Select **OK** to confirm.	

> **INFORMATION**
>
> If the outdoor temperature is outside the range of operation, the unit may NOT operate or may NOT deliver the required capacity.

To monitor leaving water and tank temperatures

During test run, the correct operation of the unit can be checked by monitoring its leaving water temperature (heating/cooling mode) and tank temperature (domestic hot water mode).

To monitor the temperatures:

1	In the menu, go to `Sensors`.	
2	Select the temperature information.	

12.4.4 To perform an actuator test run

Purpose

Perform an actuator test run to confirm the operation of the different actuators. For example, when you select **Pump**, a test run of the pump will start.

Conditions: Make sure all operation is disabled. Go to [C]: `Operation` and turn off `Room`, `Space heating/cooling` and `Tank` operation.

1	Set the user permission level to Installer. See "To change the user permission level" [▶ 138].	—
2	Go to [A.2]: `Commissioning` > `Actuator test run`.	
3	Select a test from the list. **Example:** Pump.	

4	Select **OK** to confirm. **Result:** The actuator test run starts. It stops automatically when done (±30 min for **Pump**, ±120 min for **Brine pump**, ±10 min for other test runs).		
	To stop the test run manually:		—
	1	Go to **Stop test run**.	
	2	Select **OK** to confirm.	

Possible actuator test runs

- **Backup heater 1** test (3 kW capacity, only available when no current sensors are used)
- **Backup heater 2** test (6 kW capacity, only available when no current sensors are used)
- **Pump** test

> **INFORMATION**
> Make sure that all air is purged before executing the test run. Also avoid disturbances in the water circuit during the test run.

- **Shut off valve** test
- **Diverter valve** test (3-way valve for switching between space heating and tank heating)
- **Bivalent signal** test
- **Alarm output** test
- **C/H signal** test
- **DHW pump** test
- **Backup heater phase 1** test (3 kW capacity, only available when current sensors are used)
- **Backup heater phase 2** test (3 kW capacity, only available when current sensors are used)
- **Backup heater phase 3** test (3 kW capacity, only available when current sensors are used)
- **Brine pump** test

To perform a current sensor phase check

To make sure that the current sensors measure the current of the correct phase, perform a current sensor phase check. This can be done using the backup heater actuator tests.

Note: Make sure that **Power consumption control** is set to **Current sensor** ([4-08]=3). See "Power consumption control" [▶ 199].

1	Set the user permission level to Installer. See "To change the user permission level" [▶ 138].	—
2	Go to [A.2.C]: **Commissioning** > **Actuator test run** > **Backup heater phase 1**	

3	Select **OK** to confirm. **Result:** The `Backup heater phase 1` test run starts. The current sensor values first show the values without the backup heater. After 10 seconds, one of the 3 values will change due to the backup heater becoming active on that phase. Remember or write down the current sensor of which the value increases.	
4	Go to [A.2.D]: `Commissioning` > `Actuator test run` > `Backup heater phase 2`	
5	Select **OK** to confirm. **Result:** The `Backup heater phase 2` test run starts. The current sensor values first show the values without the backup heater. After 10 seconds, one of the 3 values will change due to the backup heater becoming active on that phase. Remember or write down the current sensor of which the value increases.	
6	Switch the terminals of the current sensor wires according to the table below. Perform steps 1 to 6 until no more wires have to be switched.	—

Current sensor of which value changed		**Action to take**	
`Backup heater phase 1`	**`Backup heater phase 2`**	**First switch terminals...**	**Then switch terminals...**
CT1	CT2	Do nothing	—
	CT3	15 and 16	—
CT2	CT1	14 and 15	—
	CT3	14 and 15	14 and 16
CT3	CT1	14 and 15	14 and 16
	CT2	14 and 16	—

12.4.5 Underfloor heating screed dryout

The underfloor heating (UFH) screed dryout function is used for drying out the screed of an underfloor heating system during the construction of the building.

Conditions: Make sure all operation is disabled. Go to [C]: `Operation` and turn off `Room`, `Space heating/cooling` and `Tank` operation.

INFORMATION

- If `Emergency` is set to `Manual` ([9.5.1]=0), and the unit is triggered to start emergency operation, the user interface will ask confirmation before starting. The underfloor heating screed dryout function is active even if the user does NOT confirm emergency operation.
- During underfloor heating screed dryout, pump speed limitation [9-0D] is NOT applicable.

NOTICE

The installer is responsible for:

- contacting the screed manufacturer for the maximum allowed water temperature, to avoid cracking the screed,
- programming the underfloor heating screed dryout schedule according to the initial heating instructions of the screed manufacturer,
- checking the proper functioning of the setup on a regular basis,
- performing the correct program complying with the type of the used screed.

NOTICE

To perform an underfloor heating screed dryout, room frost protection needs to be disabled ([2-06]=0). By default, it is enabled ([2-06]=1). However, due to the "installer-on-site" mode (see "Commissioning"), room frost protection will be automatically disabled for 36 hours after the first power-on.

If the screed dryout still needs to be performed after the first 36 hours of power-on, manually disable room frost protection by setting [2-06] to "0", and KEEP it disabled until the screed dryout has finished. Ignoring this notice will result in cracking of the screed.

The installer can program up to 20 steps. For each step he needs to enter:

1 the duration in hours, up to 72 hours,

2 the desired leaving water temperature, up to 55°C.

Example:

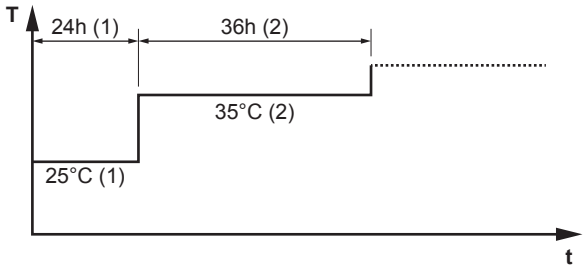

T Desired leaving water temperature (15~55°C)
t Duration (1~72 h)
(1) Action step 1
(2) Action step 2

To program an underfloor heating screed dryout schedule

1	Set the user permission level to `Installer`. See "To change the user permission level" [▶ 138].	—
2	Go to [A.4.2]: `Commissioning` > `UFH screed dryout` > `Program`.	
3	Program the schedule: To add a new step, select an empty line and change its value. To delete a step and all steps below it, decrease the duration to "–".	—
	▪ Scroll through the schedule.	
	▪ Adjust the duration (between 1 and 72 hours) and temperatures (between 15°C and 55°C).	
4	Press the left dial to save the schedule.	

To perform an underfloor heating screed dryout

Conditions: An underfloor heating screed dryout schedule has been programmed. See "To program an underfloor heating screed dryout schedule" [▸ 219].

Conditions: Make sure all operation is disabled. Go to [C]: `Operation` and turn off `Room`, `Space heating/cooling` and `Tank` operation.

1	Set the user permission level to `Installer`. See "To change the user permission level" [▸ 138].	—
2	Go to [A.4]: `Commissioning` > `UFH screed dryout`.	
3	Select `Start UFH screed dryout`.	
4	Select **OK** to confirm. **Result:** The underfloor heating screed dryout starts. It stops automatically when done.	
5	To stop the underfloor heating screed dryout manually:	—
	1 Open the menu and go to `Stop UFH screed dryout`.	
	2 Select **OK** to confirm.	

To read out the status of an underfloor heating screed dryout

Conditions: You are performing an underfloor heating screed dryout.

1	Press the back button. **Result:** A graph is displayed, highlighting the current step of the screed dryout schedule, the total remaining time, and the current desired leaving water temperature.	
2	Press the left dial to open the menu structure and to:	
	1 View the status of sensors and actuators.	—
	2 Adjust the current program	—

To stop an underfloor heating (UFH) screed dryout

U3-error

When the program is stopped by an error or an operation switch off, the U3 error will be displayed on the user interface. To resolve the error codes, see "15.4 Solving problems based on error codes" [▸ 234].

In case of a power failure, the U3 error is not generated. When power is restored, the unit automatically restarts the latest step and continues the program.

Stop UFH screed dryout

To manually stop underfloor heating screed dryout:

1	Go to [A.4.3]: `Commissioning` > `UFH screed dryout`	—
2	Select `Stop UFH screed dryout`.	
3	Select **OK** to confirm. **Result:** The underfloor heating screed dryout is stopped.	

Read out UFH screed dryout status

When the program is stopped due to an error, an operation switch-off, or a power failure, you can read out the underfloor heating screed dryout status:

1	Go to [A.4.3]: **Commissioning** > **UFH screed dryout** > **Status**	
2	You can read out the value here: **Stopped at** + the step where the underfloor screed dryout was stopped.	—
3	Modify and restart the execution of the program[a].	—

[a] If the UFH screed dryout program was stopped due to a power failure and the power resumes, the program will automatically restart the last implemented step.

12.4.6 To start or stop 10-day brine pump operation

If a brine buffer vessel is part of the brine circuit, or in case a horizontal brine loop is used, it may be required to let the brine pump run continuously for 10 days after the system is commissioned. If **10 day brine pump operation** is:

- ON: The unit operates as normal, except that the brine pump operates continuously for 10 days, independent of compressor status.
- OFF: Brine pump operation is linked to compressor status.

Conditions: All other commissioning tasks have been completed before starting the **10 day brine pump operation**. After you have done this, **10 day brine pump operation** can be activated in the commissioning menu.

1	Set the user permission level to Installer. See "To change the user permission level" [▶ 138].	—
2	Go to [A.6]: **Commissioning** > **10 day brine pump operation**.	
3	Select **On** to start the **10 day brine pump operation**. **Result:** The **10 day brine pump operation** starts.	

During the **10 day brine pump operation**, the setting will be displayed as ON in the menu. Once the procedure has been completed, it will change to OFF automatically.

NOTICE

The 10-day brine pump operation will only start if there are no errors present on the main menu screen and the timer will only count down if either an underfloor heating screed dryout is started, or if Space heating/cooling or Tank operation is enabled.

13 Hand-over to the user

Once the test run is finished and the unit operates properly, please make sure the following is clear for the user:

- Fill in the installer setting table (in the operation manual) with the actual settings.
- Make sure that the user has the printed documentation and ask him/her to keep it for future reference. Inform the user that he can find the complete documentation at the URL mentioned earlier in this manual.
- Explain the user how to properly operate the system and what to do in case of problems.
- Show the user what to do for the maintenance of the unit.
- Explain the user about energy saving tips as described in the operation manual.

14 Maintenance and service

NOTICE

Maintenance MUST be done by an authorised installer or service agent.

We recommend performing maintenance at least once a year. However, applicable legislation might require shorter maintenance intervals.

NOTICE

Applicable legislation on **fluorinated greenhouse gases** requires that the refrigerant charge of the unit is indicated both in weight and CO_2 equivalent.

Formula to calculate the quantity in CO_2 equivalent tonnes: GWP value of the refrigerant × total refrigerant charge [in kg] / 1000

In this chapter

14.1 Maintenance safety precautions 223
14.2 Yearly maintenance 223
14.2.1 Yearly maintenance: overview 223
14.2.2 Yearly maintenance: instructions 224
14.3 To drain the domestic hot water tank 227
14.4 To inspect the inside of the domestic hot water tank 228

14.1 Maintenance safety precautions

DANGER: RISK OF ELECTROCUTION

DANGER: RISK OF BURNING/SCALDING

NOTICE: Risk of electrostatic discharge

Before performing any maintenance or service work, touch a metal part of the unit in order to eliminate static electricity and to protect the PCB.

14.2 Yearly maintenance

14.2.1 Yearly maintenance: overview

- Brine leakage
- Temperature and pressure relief valve
- Chemical disinfection
- Descaling
- Drain hose
- Fluid pressure of space heating and brine circuit
- Pressure relief valves (1 at brine side, 1 at space heating side)
- Pressure relief valve of the domestic hot water tank

- Switch box
- Water and brine filters

14.2.2 Yearly maintenance: instructions

Brine leakage

Open the front panels and carefully check if brine leakage is noticeable inside the unit. See "7.2.2 To open the indoor unit" [▸ 62].

Temperature and pressure relief valve

Check for correct operation of the temperature and pressure relief valve. Manually operate the temperature and pressure relief valve to ensure free water flow through discharge pipe. Turn knob left.

Pressure reducing valve

Depending on local water conditions, annual inspection of the integral line strainer, pressure reducing valve cartridge and seating may be necessary.

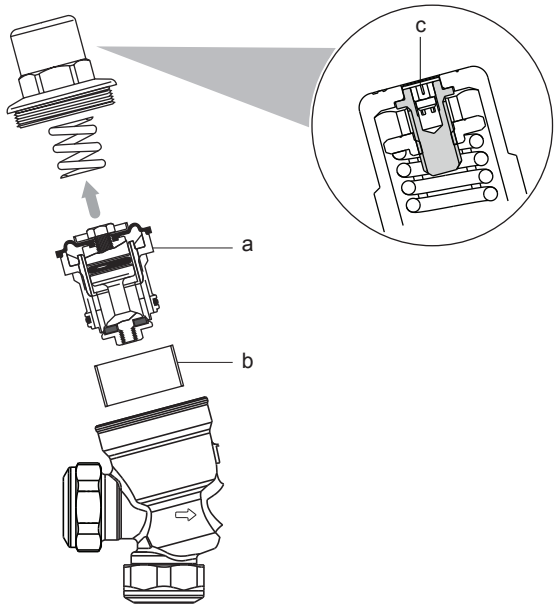

a Cartridge
b Strainer
c Calibration screw

1. Unscrew the plastic cover of the pressure reducing valve.
2. Extract the cartridge with the aid of long nosed pliers to grip the head of the set screw.
3. Remove the strainer element.
4. Clean the strainer element and cartridge under clean running water.
5. Replace if the strainer or cartridge are damaged.
6. Refit the strainer, cartridge and cover.
7. If the cartridge has been replaced, calibrate the pressure reducing valve:
   - Close the downstream isolating valve (field supply).
   - Install an Allen key on the calibration screw in the centre of the plastic cover. Rotate it clockwise to increase the outlet pressure and anticlockwise to reduce it.

Chemical disinfection

If the applicable legislation requires a chemical disinfection in specific situations, involving the domestic hot water tank, please be aware that the domestic hot water tank is a stainless steel cylinder containing an aluminium anode. We recommend to use a non-chloride based disinfectant approved for use with water intended for human consumption.

NOTICE

When using means for descaling or chemical disinfection, make sure water quality still complies with EU directive 2020/2184.

Descaling

Depending on water quality and set temperature, scale can deposit on the heat exchanger inside the domestic hot water tank and can restrict heat transfer. For this reason, descaling of the heat exchanger may be required at certain intervals.

Drain hose

Check the condition and routing of the drain hose. Water must drain appropriately from the hose. See "7.3.4 To connect the drain hose to the drain" [▸ 69].

Fluid pressure

Check whether the fluid pressure is above 1 bar. If it is lower, add fluid.

Pressure relief valve

Open the valve.

CAUTION

Discharge may be very hot.

- Check if nothing blocks the fluid in the valve or in between piping. The fluid flow coming from the relief valve must be high enough.
- Check if the fluid coming out from the relief valve is clean. If it contains debris or dirt:
  - Open the valve until the discharged water does NOT contain debris or dirt anymore.
  - Flush the system and install an additional water filter (preferably a magnetic cyclone filter).

INFORMATION

It is recommended to perform this maintenance more than once a year.

Pressure relief valve of the domestic hot water tank

Open the valve.

CAUTION

Water coming out of the valve may be very hot.

- Check if nothing blocks the water in the valve or in between piping. The water flow coming from the relief valve must be high enough.

- Check if the water coming out of the relief valve is clean. If it contains debris or dirt:
  - Open the valve until the discharged water does not contain debris or dirt anymore.
  - Flush and clean the complete tank, including the piping between the relief valve and cold water inlet.

To make sure this water originates from the tank, check after a tank heat up cycle.

INFORMATION

It is recommended to perform this maintenance more than once a year.

Switch box

Carry out a thorough visual inspection of the switch box and look for obvious defects such as loose connections or defective wiring.

WARNING

If the internal wiring is damaged, it has to be replaced by the manufacturer, its service agent or similarly qualified persons.

Water filter

Close the valve. Clean and rinse the water filter.

NOTICE

Handle the filter with care. To prevent damage to the mesh of the filter, do NOT use excessive force when you reinsert it.

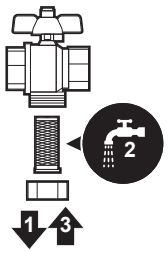

Brine filter

Clean and rinse the brine filter.

NOTICE

Handle the filter with care. To prevent damage to the mesh of the filter, do NOT use excessive force when you reinsert it.

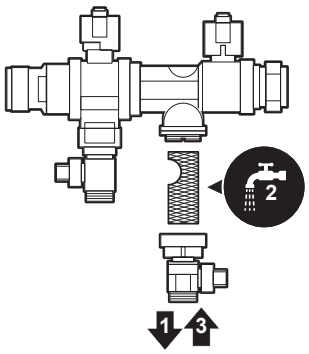

14.3 To drain the domestic hot water tank

DANGER: RISK OF BURNING/SCALDING

The water in the tank can be very hot.

Prerequisite: Stop the unit operation via the user interface.

Prerequisite: Turn OFF the respective circuit breaker.

Prerequisite: Close the cold water supply.

Prerequisite: Open all the hot water tapping points to allow air to enter the system.

Prerequisite: Remove the top panel. See "7.2.2 To open the indoor unit" [▸ 62].

1 Remove the tube from the temperature and pressure relief valve that is located on top of the tank.

2 Remove the temperature and pressure relief valve from the tank.

3 Use a drain hose and a pump to drain the tank via the access point.

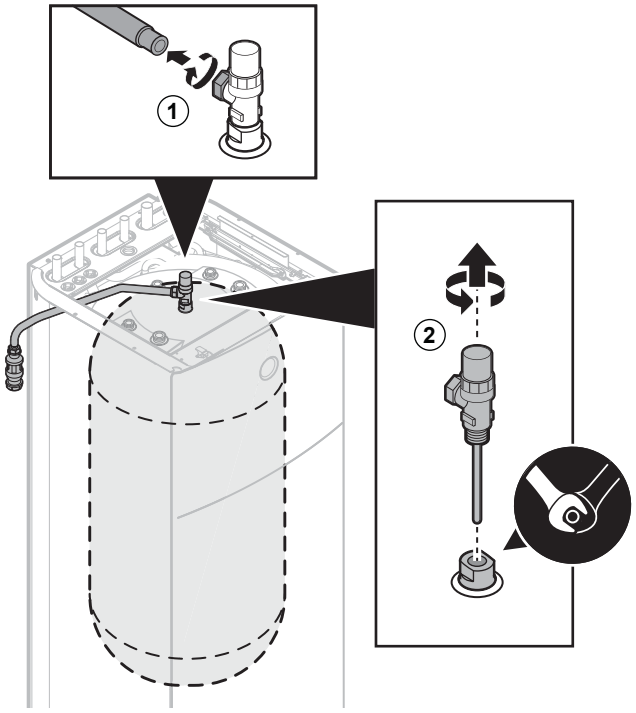

4 Tightening torques for installation:

Item	Tightening torque
Tube connection	30 N•m

Item	Tightening torque
Temperature and pressure relief valve	40 N•m

14.4 To inspect the inside of the domestic hot water tank

DANGER: RISK OF BURNING/SCALDING

The water in the tank can be very hot.

Prerequisite: Stop the unit operation via the user interface.

Prerequisite: Turn OFF the respective circuit breaker.

Prerequisite: Close the cold water supply.

Prerequisite: Open all the hot water tapping points to allow air to enter the system.

Prerequisite: Remove the top panel. See "7.2.2 To open the indoor unit" [▸ 62].

1 Remove the clip that fixes the domestic hot water OUT pipe.

2 Disconnect the pipe such that the tank is accessible for visual inspection (e.g. with an endoscope).

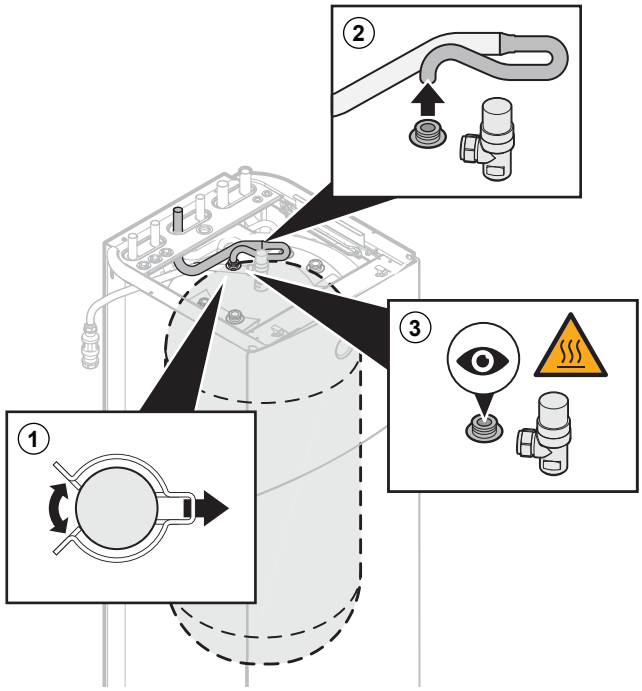

3 Reconnect the pipe to the tank.

4 Reinstall the clip to fix the domestic hot water OUT pipe.

15 Troubleshooting

In this chapter

15.1 Overview: Troubleshooting 229
15.2 Precautions when troubleshooting 229
15.3 Solving problems based on symptoms 230
15.3.1 Symptom: The unit is NOT heating as expected 230
15.3.2 Symptom: The compressor does NOT start (space heating or domestic water heating) 230
15.3.3 Symptom: The pump is making noise (cavitation) 231
15.3.4 Symptom: The pressure relief valve opens 231
15.3.5 Symptom: The pressure relief valve leaks 232
15.3.6 Symptom: The space is NOT sufficiently heated at low outdoor temperatures 232
15.3.7 Symptom: The pressure at the tapping point is temporarily unusually high 233
15.3.8 Symptom: Tank disinfection function is NOT completed correctly (AH-error) 233
15.4 Solving problems based on error codes 234
15.4.1 To display the help text in case of a malfunction 234
15.4.2 Error codes: Overview 234

15.1 Overview: Troubleshooting

Before troubleshooting

Carry out a thorough visual inspection of the unit and look for obvious defects such as loose connections or defective wiring.

15.2 Precautions when troubleshooting

WARNING

- When carrying out an inspection on the switch box of the unit, ALWAYS make sure that the unit is disconnected from the mains. Turn off the respective circuit breaker.
- When a safety device was activated, stop the unit and find out why the safety device was activated before resetting it. NEVER shunt safety devices or change their values to a value other than the factory default setting. If you are unable to find the cause of the problem, call your dealer.

DANGER: RISK OF ELECTROCUTION

WARNING

Prevent hazards due to inadvertent resetting of the thermal cut-out: power to this appliance MUST NOT be supplied through an external switching device, such as a timer, or connected to a circuit that is regularly turned ON and OFF by the utility.

DANGER: RISK OF BURNING/SCALDING

15.3 Solving problems based on symptoms

15.3.1 Symptom: The unit is NOT heating as expected

Possible causes	Corrective action
The temperature setting is NOT correct	Check the temperature setting on the remote controller. Refer to the operation manual.
The water or brine flow is too low	Check and make sure that: ▪ All shut-off valves of the water or brine circuit are completely open. ▪ The water and brine filters are clean. Clean if necessary (see "Yearly maintenance: instructions" [▸ 226]). ▪ There is no air in the system. Purge air if necessary (see "12.4.1 Air purge function on the water circuit" [▸ 213] and "12.4.2 Air purge function on the brine circuit" [▸ 215]). ▪ The water pressure is >1 bar. ▪ The expansion vessel is NOT broken. ▪ The resistance in the water circuit is NOT too high for the pump. If the problem persists after you have conducted all of the above checks, contact your dealer. In some cases, it is normal that the unit decides to use a low water flow.
The water volume in the installation is too low	Make sure that the water volume in the installation is above the minimum required value (see "8.1.3 To check the water volume and flow rate of the space heating circuit and brine circuit" [▸ 75]).

15.3.2 Symptom: The compressor does NOT start (space heating or domestic water heating)

Possible causes	Corrective action
The compressor cannot start if the water temperature is too low. The unit will use the backup heater to reach the minimum water temperature (5°C), after which the compressor can start.	If the backup heater doesn't start either, check and make sure that: ▪ The power supply to the backup heater is correctly wired. ▪ The backup heater thermal protector is NOT activated. ▪ The backup heater contactors are NOT broken. If the problem persists, contact your dealer.

Possible causes	Corrective action
The preferential kWh rate power supply settings and electrical connections do NOT match	This should match with the connections as explained in "9.2.1 To connect the main power supply" [▶ 91].
The preferential kWh rate signal was sent by the electricity company	In the user interface of the unit, go to [8.5.B] `Information` > `Actuators` > `Forced off contact`. If `Forced off contact` is `On`, the unit is operating under the preferential kWh rate. Wait for the power to return (maximum 2 hours).
Domestic hot water (including disinfection) and space heating operation are scheduled to start at the same time.	Change the schedule to not start both operation modes at the same moment.

15.3.3 Symptom: The pump is making noise (cavitation)

Possible causes	Corrective action
There is air in the system	Purge air (see "12.4.1 Air purge function on the water circuit" [▶ 213] or "12.4.2 Air purge function on the brine circuit" [▶ 215]).
The pressure at the pump inlet is too low	Check and make sure that: ▪ The pressure is >1 bar. ▪ The expansion vessel is NOT broken. ▪ The pre-pressure setting of the expansion vessel is correct (see "8.1.4 Changing the pre-pressure of the expansion vessel" [▶ 76]).

15.3.4 Symptom: The pressure relief valve opens

Possible causes	Corrective action
The expansion vessel is broken	Replace the expansion vessel.
The water or brine volume in the installation is too high	Make sure that the water or brine volume in the installation is below the maximum allowed value (see "8.1.3 To check the water volume and flow rate of the space heating circuit and brine circuit" [▶ 75] and "8.1.4 Changing the pre-pressure of the expansion vessel" [▶ 76]).

Possible causes	Corrective action
The water circuit head is too high	The water circuit head is the difference in height between the unit and the highest point of the water circuit. If the unit is located at the highest point of the installation, the installation height is considered 0 m. The maximum water circuit head is 10 m. Check the installation requirements.

15.3.5 Symptom: The pressure relief valve leaks

Possible causes	Corrective action
Dirt is blocking the water pressure relief valve outlet	Check whether the pressure relief valve works correctly by turning the red knob on the valve counterclockwise: ▪ If you do NOT hear a clacking sound, contact your dealer. ▪ If the water or brine keeps running out of the unit, close both inlet and outlet shut-off valves first and then contact your dealer.

15.3.6 Symptom: The space is NOT sufficiently heated at low outdoor temperatures

Possible causes	Corrective action
The backup heater operation is not activated	Check the following: ▪ The backup heater operation mode is enabled. Go to: [9.3.8]: `Installer settings` > `Backup heater` > `Operation` [4-00] ▪ The backup heater overcurrent circuit breaker is on. If not, turn it back on. ▪ The thermal protector of the backup heater is NOT activated. If it has, check the following, and then press the reset button in the switch box: - The water pressure - Whether there is air in the system - The air purge operation
The backup heater equilibrium temperature has not been configured correctly	Increase the equilibrium temperature to activate the backup heater operation at a higher outdoor temperature. Go to: [9.3.7]: `Installer settings` > `Backup heater` > `Equilibrium temperature` [5-01]

Possible causes	Corrective action
There is air in the system.	Purge air manually or automatically. See the air purge function in the chapter "12 Commissioning" [▶ 211].
Too much heat pump capacity is used for heating domestic hot water	Check if the **Space heating priority** settings have been configured appropriately: ▪ Make sure that the **Space heating priority** has been enabled. Go to [9.6.1]: **Installer settings** > **Balancing** > **Space heating priority** [5-02] ▪ Increase the "space heating priority temperature" to activate backup heater operation at a higher outdoor temperature. Go to [9.6.3]: **Installer settings** > **Balancing** > **Priority temperature** [5-03]

15.3.7 Symptom: The pressure at the tapping point is temporarily unusually high

Possible causes	Corrective action
Failing or blocked pressure relief valve.	▪ Flush and clean the complete tank including the piping between pressure relief valve and the cold water inlet. ▪ Replace the pressure relief valve.

15.3.8 Symptom: Tank disinfection function is NOT completed correctly (AH-error)

Possible causes	Corrective action
The disinfection function was interrupted by domestic hot water tapping	Program the start-up of the disinfection function when the coming 4 hours NO domestic hot water tapping is expected.
Large domestic hot water tapping happened recently before the programmed start-up of the disinfection function	If in [5.6] **Tank** > **Heat up mode** the mode **Reheat only** or **Schedule + reheat** is selected, it is recommended to program the start-up of the disinfection function at least 4 hours later than the last expected large hot water tapping. This start-up can be set by installer settings (disinfection function). If in [5.6] **Tank** > **Heat up mode** the mode **Schedule only** is selected, it is recommended to program a **Eco** action 3 hours before the scheduled start-up of the disinfection function to preheat the tank.

Possible causes	Corrective action
The disinfection operation was stopped manually: [C.3] `Operation` > `Tank` was turned off during disinfection.	Do NOT stop tank operation during disinfection.

15.4 Solving problems based on error codes

If the unit runs into a problem, the user interface displays an error code. It is important to understand the problem and to take measures before resetting an error code. This should be done by a licensed installer or by your local dealer.

This chapter gives you an overview of all possible error codes and their descriptions as they appear on the user interface.

For detailed troubleshooting of each error, see the service manual.

15.4.1 To display the help text in case of a malfunction

In case of a malfunction, the following will appear on the home screen depending on the severity:

- 🔔: Error
- ⚠: Malfunction

You can get a short and a long description of the malfunction as follows:

1	Press the left dial to open the main menu and go to `Malfunctioning`. **Result:** A short description of the error and the error code is displayed on the screen.	
2	Press **?** in the error screen. **Result:** A long description of the error is displayed on the screen.	**?**

15.4.2 Error codes: Overview

Error codes of the unit

Error code	Description
7H-01	`Water flow problem`
7H-04	`Water flow problem during domestic hot water production`
7H-05	`Water flow problem during heating/sampling`
7H-06	`Water flow problem during cooling/defrost`
7H-07	`Water flow problem. Pump deblocking active`
80-00	`Returning water temperature sensor problem`
81-00	`Leaving water temperature sensor problem`
81-04	`Leaving water temperature sensor not properly mounted`
89-01	`Heat exchanger freeze-up protection activated during defrost (error)`

Error code	Description
89-02	Heat exchanger freeze-up protection activated during heating / DHW operation. (warning)
89-03	Heat exchanger freeze-up protection activated during defrost (warning)
89-05	Heat exchanger freeze-up protection activated during cooling operation. (error)
89-06	Heat exchanger freeze-up protection activated during cooling operation. (warning)
8F-00	Abnormal increase outlet water temperature (DHW)
8H-00	Abnormal increase outlet water temperature
8H-03	Overheating water circuit (thermostat)
A1-00	Zero cross detection problem
A5-00	OU: High pressure peak cut / freeze protection problem
AA-01	Backup heater overheated or BUH power cable not connected
AH-00	Tank disinfection function not completed correctly
AJ-03	Too long DHW heat-up time required
C0-00	Flow sensor malfunction
C1-10	ACS communication malfunction
C1-11	ACS communication malfunction
C4-00	Heat exchanger temperature sensor problem
C5-00	Heat exchanger thermistor abnormality
C8-01	Current sensor abnormality
CJ-02	Room temperature sensor problem
E1-00	OU: PCB defect
E3-00	OU: Actuation of high pressure switch (HPS)
E4-00	Abnormal suction pressure
E5-00	OU: Overheat of inverter compressor motor
E6-00	OU: Compressor startup defect
E7-63	Brine pump error
E8-00	OU: Power input overvoltage
E9-00	Malfunction of electronic expansion valve
EA-00	OU: Cool/heat switchover problem
EC-00	Abnormal increase tank temperature
EC-04	Tank preheating

Error code	Description
EJ-01	Brine circuit pressure low
F3-00	OU: Malfunction of discharge pipe temperature
F6-00	OU: Abnormal high pressure in cooling
FA-00	OU: Abnormal high pressure, actuation of HPS
H0-00	OU: Voltage/current sensor problem
H1-00	External temperature sensor problem
H3-00	OU: Malfunction of high pressure switch (HPS)
H4-00	Malfunction of low pressure switch
H5-00	Malfunction of compressor overload protection
H6-00	OU: Malfunction of position detection sensor
H8-00	OU: Malfunction of compressor input (CT) system
H9-00	OU: Malfunction of outdoor air thermistor
HC-00	Tank temperature sensor problem
HC-01	Second tank temperature sensor problem
HJ-10	Water pressure sensor abnormality
HJ-12	Bypass valve turning error
J3-00	OU: Malfunction of discharge pipe thermistor
J5-00	Malfunction of suction pipe thermistor
J6-00	OU: Malfunction of heat exchanger thermistor
J6-07	OU: Malfunction of heat exchanger thermistor
J6-32	Leaving water temperature thermistor Abnormality (outdoor unit)
J6-33	Sensor communication error
J7-12	Brine inlet thermistor abnormality
J8-00	Malfunction of refrigerant liquid thermistor
J8-07	Brine outlet thermistor abnormality
JA-00	OU: Malfunction of high pressure sensor
JA-17	Refrigerant pressure sensor abnormality
JC-00	Low pressure sensor abnormality
JC-01	Evaporator pressure sensor (S1NPL) abnormality
L1-00	Malfunction of INV PCB
L3-00	OU: Electrical box temperature rise problem
L4-00	OU: Malfunction of inverter radiating fin temperature rise
L5-00	OU: Inverter instantaneous overcurrent (DC)

Error code	Description
L8-00	Malfunction triggered by a thermal protection in the inverter PCB
L9-00	Prevention of compressor lock
LC-00	Malfunction in communication system of outdoor unit
P1-00	Open-phase power supply imbalance
P3-00	Abnormal direct current
P4-00	OU: Malfunction of radiating fin temperature sensor
PJ-00	Capacity setting mismatch
PJ-09	Brine pump type mismatch
U0-00	OU: Shortage of refrigerant
U1-00	Malfunction by reverse phase/open-phase
U2-00	OU: Defect of power supply voltage
U3-00	Underfloor heating screed dryout function not completed correctly
U4-00	Indoor/outdoor unit communication problem
U5-00	User interface communication problem
U7-00	OU: Transmission malfunction between main CPU- INV CPU
U8-01	Connection with LAN adapter lost
U8-02	Connection with room thermostat lost
U8-03	No connection with room thermostat
U8-04	Unknown USB device
U8-05	File malfunction
U8-07	P1P2 communication error
UA-00	Indoor unit, outdoor unit matching problem
UA-17	Tank type problem

INFORMATION

In case of error code AH and no interruption of the disinfection function occurred due to domestic hot water tapping, following actions are recommended:

- When the **Reheat only** or **Schedule + reheat** mode is selected, it is recommended to program the start-up of the disinfection function at least 4 hours later than the last expected large hot water tapping. This start-up can be set by installer settings (disinfection function).
- When the **Schedule only** mode is selected, it is recommended to program an **Eco** action 3 hours before the scheduled start-up of the disinfection function to preheat the tank.

NOTICE

When the minimum water flow is lower than described in the table below, the unit will temporarily stop operation and the user interface will display error 7H-01. After some time, this error will reset automatically and the unit will resume operation.

Minimum required flow rate	
Heat pump operation	No minimum required flow
Cooling operation	10 l/min
Backup heater operation	No minimum required flow during heating

INFORMATION

Error AJ-03 is reset automatically from the moment there is a normal tank heat-up.

16 Disposal

NOTICE

Do NOT try to dismantle the system yourself: dismantling of the system, treatment of the refrigerant, oil and other parts MUST comply with applicable legislation. Units MUST be treated at a specialised treatment facility for reuse, recycling and recovery.

17 Technical data

A **subset** of the latest technical data is available on the regional Daikin website (publicly accessible). The **full set** of latest technical data is available on the Daikin Business Portal (authentication required).

In this chapter

17.1 Piping diagram: Indoor unit 241
17.2 Wiring diagram: Indoor unit 242
17.3 ESP curve: Indoor unit 248
17.4 Technical specifications: Domestic hot water tank 249
17.4.1 Test results in accordance with EN12897 (2016) 249
17.4.2 Warning label 249

17.1 Piping diagram: Indoor unit

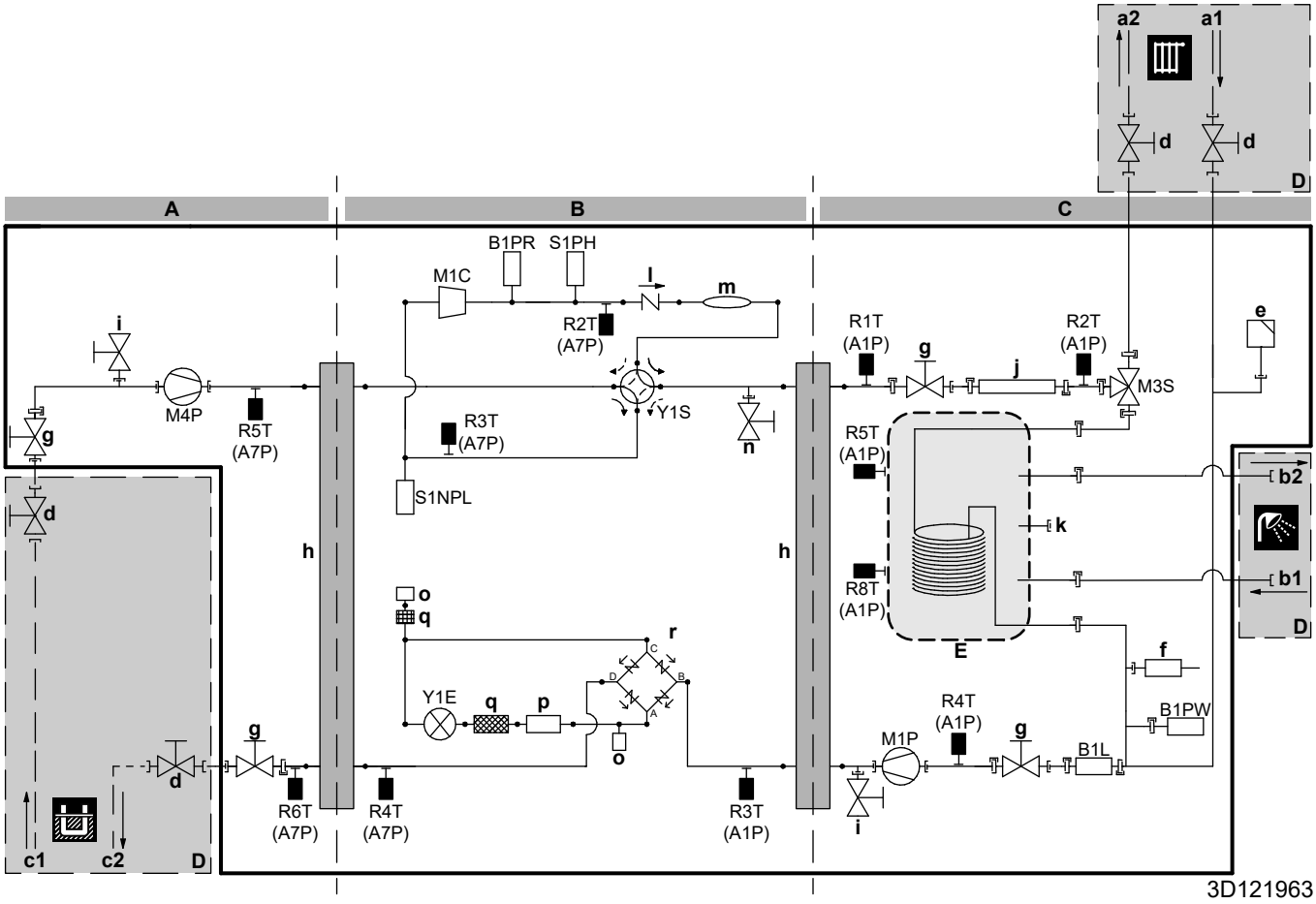

A Brine side
B Refrigerant side
C Water side
D Field installed
E DHW tank
a1 Space heating water IN (Ø22 mm)
a2 Space heating water OUT (Ø22 mm)
b1 Domestic hot water: cold water IN (Ø22 mm)
b2 Domestic hot water: hot water OUT (Ø22 mm)
c1 Brine IN (Ø28 mm)
c2 Brine OUT (Ø28 mm)
d Shut-off valve
e Automatic air purge valve
f Safety valve
g Shut-off valve
h Plate heat exchanger
i Drain valve
j Backup heater
k Recirculation connection (3/4" G female)
l Check valve
m Muffler
n Refrigerant pressure relief valve
o Service port (5/16" flare)
p Heat sink
q Filter
r Rectifier

Refrigerant flow:
Heating
Cooling

B1L Flow sensor
B1PR Refrigerant high pressure sensor
B1PW Space heating water pressure sensor
M1C Compressor
M1P Water pump
M3S 3-way valve (space heating/domestic hot water)
M4P Brine pump
S1NPL Low pressure sensor
S1PH High pressure switch
Y1E Electronic expansion valve
Y1S Solenoid valve (4-way valve)

Thermistors:
R2T (A7P) Compressor discharge
R3T (A7P) Compressor suction
R4T (A7P) 2 phase
R5T (A7P) Brine IN
R6T (A7P) Brine OUT
R1T (A1P) Heat exchanger – water OUT
R2T (A1P) Backup heater – water OUT
R3T (A1P) Liquid refrigerant
R4T (A1P) Heat exchanger – water IN
R5T (A1P) Tank
R8T (A1P) Tank

Connections:
Screw connection
Quick coupling
Brazed connection

17.2 Wiring diagram: Indoor unit

See the internal wiring diagram supplied with the unit (on the inside of the front panel). The abbreviations used are listed below.

Notes to go through before starting the unit

English	Translation
Notes to go through before starting the unit	Notes to go through before starting the unit
X1M	Main terminal
X2M	Field wiring terminal for AC
X5M	Field wiring terminal for DC
—·—·—·	Earth wiring
15	Wire number 15
- - - - - - -	Field supply
—> **/12.2	Connection ** continues on page 12 column 2
①	Several wiring possibilities
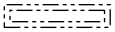	Option
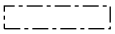	Mounted in switch box
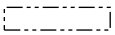	Wiring depending on model
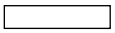	PCB
Backup heater power supply	Backup heater power supply
☐ 1N~, 230 V, 3/6 kW	☐ 1N~, 230 V, 3/6 kW
☐ 3N~, 400 V, 6/9 kW	☐ 3N~, 400 V, 6/9 kW
User installed options	User installed options
☐ Remote user interface	☐ Remote user interface (Human Comfort Interface)
☐ Ext. indoor thermistor	☐ External indoor thermistor
☐ Digital I/O PCB	☐ Digital I/O PCB
☐ Demand PCB	☐ Demand PCB
☐ Brine low pressure switch	☐ Brine low pressure switch
Main LWT	Main leaving water temperature
☐ On/OFF thermostat (wired)	☐ On/OFF thermostat (wired)
☐ On/OFF thermostat (wireless)	☐ On/OFF thermostat (wireless)
☐ Ext. thermistor	☐ External thermistor
☐ Heat pump convector	☐ Heat pump convector
Add LWT	Additional leaving water temperature
☐ On/OFF thermostat (wired)	☐ On/OFF thermostat (wired)
☐ On/OFF thermostat (wireless)	☐ On/OFF thermostat (wireless)

English	Translation
☐ Ext. thermistor	☐ External thermistor
☐ Heat pump convector	☐ Heat pump convector

Position in switch box

English	Translation
Position in switch box	Position in switch box

Legend

A1P		Main PCB (hydro)
A2P	*	User interface PCB
A3P	*	On/OFF thermostat
A3P	*	Heat pump convector
A4P	*	Digital I/O PCB
A4P	*	Receiver PCB (Wireless On/OFF thermostat, PC=power circuit)
A6P		Backup heater control PCB
A7P		Inverter PCB
A8P	*	Demand PCB
A15P		LAN adapter
A16P		ACS digital I/O PCB
CN* (A4P)	*	Connector
CT*	*	Current sensor
DS1 (A8P)	*	DIP switch
F1B	#	Overcurrent fuse
F1U~F2U(A4P)	*	Fuse (5 A, 250 V)
F2B	#	Overcurrent fuse compressor
K*R (A4P)		Relay on PCB
K9M		Thermal protector backup heater relay
M2P	#	Domestic hot water pump
M2S	#	Shut-off valve
M3P	#	Drain pump
PC (A4P)	*	Power circuit
PHC1 (A4P)	*	Optocoupler input circuit
Q*DI	#	Earth leakage circuit breaker
Q1L		Thermal protector backup heater
Q4L	#	Safety thermostat
R1T (A2P)	*	Thermistor (ambient temperature of the user interface (Human Comfort Interface))

R1T (A3P)	*	Thermistor (ambient temperature of the On/OFF thermostat)
R1T (A7P)		Thermistor (outdoor ambient temperature)
R2T (A3P)	*	Thermistor (floor temperature or indoor ambient temperature) (in case of wireless On/OFF thermostat)
R6T (A1P)	*	Thermistor (indoor ambient temperature) (in case of external indoor ambient thermistor)
R1H (A3P)	*	Humidity sensor
S1L	#	Low level switch
S1PL	#	Brine low pressure switch
S1S	#	Preferential kWh rate power supply contact
S2S	#	Electricity meter pulse input 1
S3S	#	Electricity meter pulse input 2
S6S~S9S	#	Digital power limitation inputs
SS1 (A4P)	*	Selector switch
TR1, TR2		Power supply transformer
X*A		Connector
X*M		Terminal strip
X*Y		Connector
Z*C		Noise filter (ferrite core)

* Optional
\# Field supply

Translation of text on wiring diagram

English	Translation
(1) Main power connection	(1) Main power connection
For preferential kWh rate power supply	For preferential kWh rate power supply
Normal kWh rate power supply	Normal kWh rate power supply
Only for preferential kWh rate power supply with separate normal kWh rate power supply	Only for preferential kWh rate power supply with separate normal kWh rate power supply
Only for preferential kWh rate power supply without separate normal kWh rate power supply	Only for preferential kWh rate power supply without separate normal kWh rate power supply
Preferential kWh rate power supply contact: 16 V DC detection (voltage supplied by PCB)	Preferential kWh rate power supply contact: 16 V DC detection (voltage supplied by PCB)
SWB	Switch box
(2) Power supply BUH	(2) Backup heater power supply
BLK	Black
BLU	Blue

English	Translation
BRN	Brown
GRY	Grey
Only for combined 1F BUH/compressor power supply (3/6 kW)	Only for combined 1F backup heater/ compressor power supply (3/6 kW)
Only for combined 3F BUH/compressor power supply (6/9 kW)	Only for combined 3F backup heater/ compressor power supply (6/9 kW)
Only for dual cable power supply	Only for dual cable power supply
Only for single cable power supply	Only for single cable power supply
Only for split 1F BUH/1F compressor power supply (3/6 kW)	Only for split 1F backup heater/1F compressor power supply (3/6 kW)
Only for split 3F BUH/1F compressor power supply (6/9 kW)	Only for split 3F backup heater/1F compressor power supply (6/9 kW)
SWB	Switch box
YLW/GRN	Yellow/green
(3) User interface	(3) User interface
Only for remote user interface	Only for remote user interface
SWB	Switch box
(4) Drain pump	(4) Drain pump
SWB	Switch box
(5) Ext. indoor ambient thermistor	(5) External indoor ambient thermistor
SWB	Switch box
(6) Field supplied options	(6) Field supplied options
12 V DC pulse detection (voltage supplied by PCB)	12 V DC pulse detection (voltage supplied by PCB)
230 V AC supplied by PCB	230 V AC supplied by PCB
Continuous	Continuous current
DHW pump	Domestic hot water pump
DHW pump output	Domestic hot water pump output
Electrical meters	Electricity meters
For safety thermostat	For safety thermostat
Inrush	Inrush current
Max. load	Maximum load
Normally closed	Normally closed
Normally open	Normally open
Safety thermostat contact: 16 V DC detection (voltage supplied by PCB)	Safety thermostat contact: 16 V DC detection (voltage supplied by PCB)
Shut-off valve	Shut-off valve
SWB	Switch box
(7) Option PCBs	(7) Option PCBs

English	Translation
Alarm output	Alarm output
Changeover to ext. heat source	Changeover to external heat source
Max. load	Maximum load
Min. load	Minimum load
Only for demand PCB option	Only for demand PCB option
Only for digital I/O PCB option	Only for digital I/O PCB option
Options: ext. heat source output, alarm output	Options: external heat source output, alarm output
Options: On/OFF output	Options: On/OFF output
Power limitation digital inputs: 12 V DC / 12 mA detection (voltage supplied by PCB)	Power limitation digital inputs: 12 V DC / 12 mA detection (voltage supplied by PCB)
Space C/H On/OFF output	Space cooling/heating On/OFF output
SWB	Switch box
(8) External On/OFF thermostats and heat pump convector	(8) External On/OFF thermostats and heat pump convector
Additional LWT zone	Additional leaving water temperature zone
Main LWT zone	Main leaving water temperature zone
Only for external sensor (floor/ambient)	Only for external sensor (floor or ambient)
Only for heat pump convector	Only for heat pump convector
Only for wired On/OFF thermostat	Only for wired On/OFF thermostat
Only for wireless On/OFF thermostat	Only for wireless On/OFF thermostat
(9) Current sensors	(9) Current sensors
SWB	Switch box
(10) Brine pressure loss detection	(10) Brine pressure loss detection
SWB	Switch box
With pressure loss detection	With pressure loss detection
Without pressure loss detection	Without pressure loss detection
(11) Ext. outdoor ambient thermistor	(11) External outdoor ambient thermistor
SWB	Switch box
(12) LAN adapter connection	(12) LAN adapter connection
Ethernet	Ethernet
LAN adapter	LAN adapter
SWB	Switch box

Electrical connection diagram

For more details, please check the unit wiring.

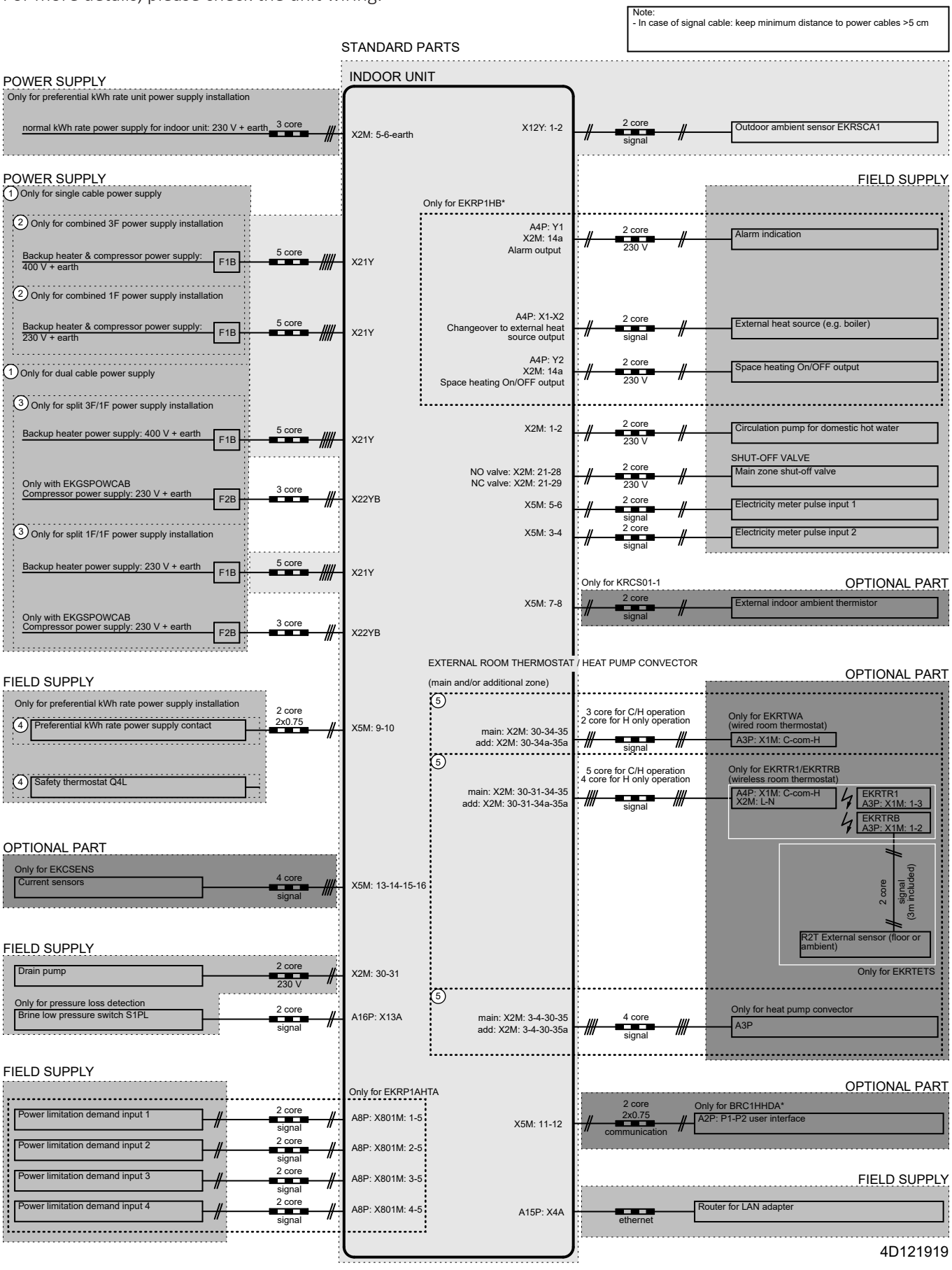

17.3 ESP curve: Indoor unit

ESP for space heating/cooling circuit

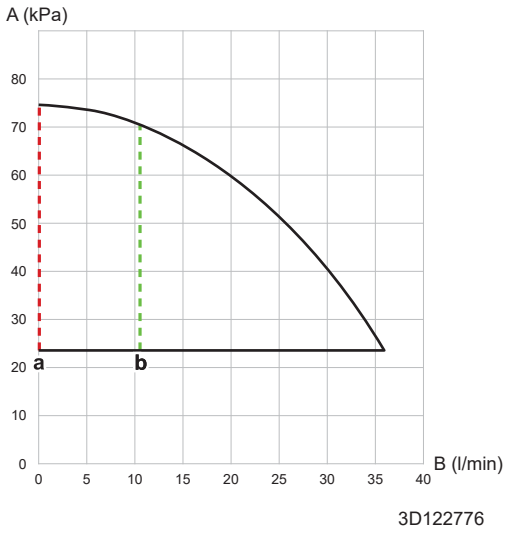

A External static pressure (ESP)
B Water flow rate
a Minimum water flow rate during heat pump operation
b Minimum water flow rate during cooling operation

NOTICE

Selecting a flow outside the operating area can damage the unit or cause the unit to malfunction.

ESP for brine circuit

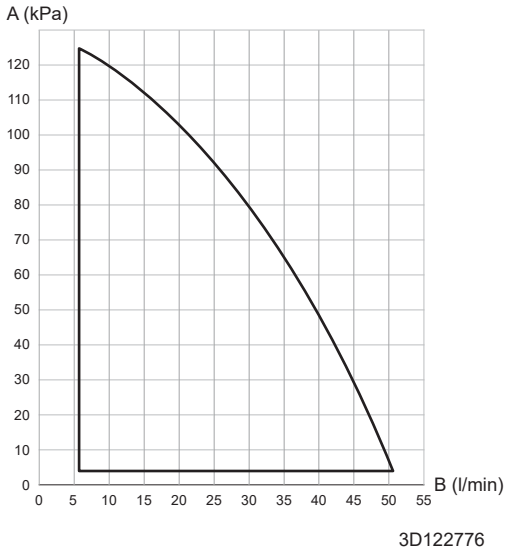

A External static pressure (ESP)
B Brine flow rate

NOTICE

Selecting a flow outside the operating area can damage the unit or cause the unit to malfunction.

17.4 Technical specifications: Domestic hot water tank

17.4.1 Test results in accordance with EN12897 (2016)

INFORMATION

This unit has been tested and approved according to BS EN12897:2016

Description	Test result
Hot water capacity	160 l
Reheat time	14 min

17.4.2 Warning label

WARNING TO USER

- Do not remove or adjust any component part of this installation. Contact the installer.
- Should the system develop a fault, switch the system off and contact the installer.

WARNING TO INSTALLER

- This installation is subject to building regulation approval, notify Local Authority of intention to install.
- Use only manufacturer's recommended spare parts. Contact your local Daikin dealer.
- Installed by

name .....

address .....

tel. No. .....

completion date .....

TECHNICAL SPECIFICATIONS EN12897: 2016

- Maximum water supply pressure to pressure reducing valve: **16 bar**
- Operating pressure/set pressure of pressure reducing valve: **3.5 bar**
- Maximum primary working pressure (heating): **2.5 bar**
- Maximum flow temperature: **65 °C**
- Expansion vessel pre-charge pressure: **3.5 bar**
- Expansion valve setting: **8 bar**
- Temperature and pressure relief valve replacement part No.: **302810P**
- Operating pressure of temperature and pressure relief valve: **10 bar**
- Operating temperature of temperature and pressure relief valve: **95 °C**
- Operating temperature of thermal cut-out (2 pieces): **89 °C**
- Primary heating power input: **4.4 kW**
- Primary flow rate to reach primary heating power input: **15 l/min**
- Standing heat loss: **1.35 kWh/24h**
- Storage capacity **180 l**
- Mass of unit when full **403 kg**
- Maximum design pressure: **10 bar**
- Rated volume heat exchanger: **9.1 l**

DAIKIN EUROPE N.V. 4P599463-1A

18 Glossary

Dealer
Sales distributor for the product.

Authorised installer
Technical skilled person who is qualified to install the product.

User
Person who is owner of the product and/or operates the product.

Applicable legislation
All international, European, national and local directives, laws, regulations and/or codes that are relevant and applicable for a certain product or domain.

Service company
Qualified company which can perform or coordinate the required service to the product.

Installation manual
Instruction manual specified for a certain product or application, explaining how to install, configure and maintain it.

Operation manual
Instruction manual specified for a certain product or application, explaining how to operate it.

Maintenance instructions
Instruction manual specified for a certain product or application, which explains (if relevant) how to install, configure, operate and/or maintain the product or application.

Accessories
Labels, manuals, information sheets and equipment that are delivered with the product and that need to be installed according to the instructions in the accompanying documentation.

Optional equipment
Equipment made or approved by Daikin that can be combined with the product according to the instructions in the accompanying documentation.

Field supply
Equipment NOT made by Daikin that can be combined with the product according to the instructions in the accompanying documentation.

Field settings table

[8.7.5] = ... **8691**

Applicable indoor units

EGSAH06DA9W
EGSAH10DA9W
EGSAX06DA9W
EGSAX10DA9W
EGSAX06DA9WG
EGSAX10DA9WG
EGSAH06UDA9W
EGSAH10UDA9W
EGSAX06UDA9W
EGSAX10UDA9W

Notes

(*1) *X*
(*2) *H*

Field settings table

Breadcrumb	Field code	Setting name		Range, step **Default value**	Installer setting at variance with default value Date	 Value
Room						
└ Antifrost						
1.4.1	[2-06]	Activation	R/W	0: Disabled **1: Enabled**		
1.4.2	[2-05]	Room antifrost temperature	R/W	4~16°C, step: 1°C **8°C**		
└ Setpoint range						
1.5.1	[3-07]	Heating minimum	R/W	12~18°C, step: 0,5°C **12°C**		
1.5.2	[3-06]	Heating maximum	R/W	18~30°C, step: 0,5°C **30°C**		
1.5.3	[3-09]	Cooling minimum	R/W	15~25°C, step: 0,5°C **15°C**		
1.5.4	[3-08]	Cooling maximum	R/W	25~35°C, step: 0,5°C **35°C**		
Room						
1.6	[2-09]	Room sensor offset	R/W	-5~5°C, step: 0,5°C **0°C**		
1.7	[2-0A]	Room sensor offset	R/W	-5~5°C, step: 0,5°C **0°C**		
Main zone						
2.4		Setpoint mode	R/W	0: Fixed 1: WD heating, fixed cooling **2: Weather dependent**		
└ Heating WD curve						
2.5	[1-00]	Low ambient temp. for LWT main zone heating WD curve.	R/W	-40~5°C, step: 1°C **-40°C**		
2.5	[1-01]	High ambient temp. for LWT main zone heating WD curve.	R/W	10~25°C, step: 1°C **15°C**		
2.5	[1-02]	Leaving water value for low ambient temp. for LWT main zone heating WD curve.	R/W	[9-01]~[9-00], step: 1°C [2-0C]=0 45°C [2-0C]=1 55°C [2-0C]=2 **65°C**		
2.5	[1-03]	Leaving water value for high ambient temp. for LWT main zone heating WD curve.	R/W	[9-01]~min(45, [9-00])°C , step: 1°C [2-0C]=0 22°C [2-0C]=1 35°C [2-0C]=2 **25°C**		
└ Cooling WD curve						
2.6	[1-06]	Low ambient temp. for LWT main zone cooling WD curve.	R/W	10~25°C, step: 1°C **20°C**		
2.6	[1-07]	High ambient temp. for LWT main zone cooling WD curve.	R/W	25~43°C, step: 1°C **35°C**		
2.6	[1-08]	Leaving water value for low ambient temp. for LWT main zone cooling WD curve.	R/W	[9-03]~[9-02]°C, step: 1°C **22°C**		
2.6	[1-09]	Leaving water value for high ambient temp. for LWT main zone cooling WD curve.	R/W	[9-03]~[9-02]°C, step: 1°C **18°C**		
Main zone						
2.7	[2-0C]	Emitter type	R/W	0: Underfloor heating 1: Fancoil unit **2: Radiator**		
└ Setpoint range						
2.8.1	[9-01]	Heating minimum	R/W	15~37°C, step: 1°C **15°C**		
2.8.2	[9-00]	Heating maximum	R/W	[2-0C]=0 37~55, step: 1°C 55°C [2-0C]≠0 37~65, step: 1°C **65°C**		
2.8.3	[9-03]	Cooling minimum	R/W	5~18°C, step: 1°C **5°C**		
2.8.4	[9-02]	Cooling maximum	R/W	18~22°C, step: 1°C **22°C**		
Main zone						
2.9	[C-07]	Control	R/W	**0: LWT control** 1: Ext RT control 2: RT control		
2.A	[C-05]	Thermostat type	R/W	0: - 1: 1 contact **2: 2 contacts**		
└ Delta T						
2.B.1	[1-0B]	Delta T heating	R/W	3~10°C, step: 1°C **10°C**		
2.B.2	[1-0D]	Delta T cooling	R/W	3~10°C, step: 1°C **5°C**		
└ Modulation						
2.C.1	[8-05]	Modulation	R/W	**0: No** 1: Yes		
2.C.2	[8-06]	Max modulation	R/W	0~10°C, step: 1°C **5°C**		
└ Shut off valve						
2.D.1	[F-0B]	During thermo	R/W	**0: No** 1: Yes		
2.D.2	[F-0C]	During cooling	R/W	0: No **1: Yes**		
└ WD mode type						
2.E		WD curve type	R/W	0: 2-points **1: Slope-Offset**		
Additional zone						
3.4		Setpoint mode	R/W	0: Fixed 1: WD heating, fixed cooling **2: Weather dependent**		
└ Heating WD curve						

Field settings table

Breadcrumb	Field code	Setting name		Range, step **Default value**	Installer setting at variance with default value Date	 Value
3.5	[0-00]	Leaving water value for high ambient temp. for LWT add zone heating WD curve.	R/W	[9-05]~min(45,[9-06])°C, step: 1°C [2-0C]=0 22°C [2-0C]=1 35°C [2-0C]=2 **25°C**		
3.5	[0-01]	Leaving water value for low ambient temp. for LWT add zone heating WD curve.	R/W	[9-05]~[9-06]°C, step: 1°C [2-0C]=0 45°C [2-0C]=1 55°C [2-0C]=2 **65°C**		
3.5	[0-02]	High ambient temp. for LWT add zone heating WD curve.	R/W	10~25°C, step: 1°C **15°C**		
3.5	[0-03]	Low ambient temp. for LWT add zone heating WD curve.	R/W	-40~5°C, step: 1°C **-40°C**		
└ Cooling WD curve						
3.6	[0-04]	Leaving water value for high ambient temp. for LWT add zone cooling WD curve.	R/W	[9-07]~[9-08]°C, step: 1°C **8°C**		
3.6	[0-05]	Leaving water value for low ambient temp. for LWT add zone cooling WD curve.	R/W	[9-07]~[9-08]°C, step: 1°C **12°C**		
3.6	[0-06]	High ambient temp. for LWT add zone cooling WD curve.	R/W	25~43°C, step: 1°C **35°C**		
3.6	[0-07]	Low ambient temp. for LWT add zone cooling WD curve.	R/W	10~25°C, step: 1°C **20°C**		
Additional zone						
3.7	[2-0D]	Emitter type	R/W	0: Underfloor heating 1: Fancoil unit **2: Radiator**		
└ Setpoint range						
3.8.1	[9-05]	Heating minimum	R/W	15~37°C, step: 1°C **15°C**		
3.8.2	[9-06]	Heating maximum	R/W	[2-0C]=0 37~55, step: 1°C 55°C [2-0C]≠0 37~65, step: 1°C **65°C**		
3.8.3	[9-07]	Cooling minimum	R/W	5~18°C, step: 1°C **5°C**		
3.8.4	[9-08]	Cooling maximum	R/W	18~22°C, step: 1°C **22°C**		
Additional zone						
3.A	[C-06]	Thermostat type	R/W	0: - 1: 1 contact **2: 2 contacts**		
└ Delta T						
3.B.1	[1-0C]	Delta T heating	R/W	3~10°C, step: 1°C **10°C**		
3.B.2	[1-0E]	Delta T cooling	R/W	3~10°C, step: 1°C **5°C**		
└ WD mode type						
3.C		WD curve type	R/W	0: 2-points **1: Slope-Offset**		
Space heating / cooling └ Operation range						
4.3.1	[4-02]	Space heating OFF temp	R/W	14~35°C, step: 1°C **16°C**		
4.3.2	[F-01]	Space cooling OFF temp	R/W	10~35°C, step: 1°C **20°C**		
Space heating / cooling						
4.4	[7-02]	Number of zones	R/W	**0: 1 LWT zone** 1: 2 LWT zones		
4.5	[F-0D]	Pump operation mode	R/W	0: Continuous **1: Sample** 2: Request		
4.6	[E-02]	Unit type	R/O	**0: Reversible (*1)** **1: Heating only (*2)**		
4.7	[9-0D]	Pump speed limitation	R/W	0~8, step:1 0: No limitation 1~4: 90~60% pump speed 5~8: 90~60% pump speed during sampling **6**		
Space heating / cooling						
4.9	[F-00]	Pump outside range	R/W	**0: Restricted** 1: Allowed		
4.A	[D-03]	Increase around 0°C	R/W	0: No 1: increase 2°C, span 4°C **2: increase 4°C, span 4°C** 3: increase 2°C, span 8°C 4: increase 4°C, span 8°C		
4.B	[9-04]	Overshoot	R/W	1~4°C, step: 1°C **4°C**		
4.C	[2-06]	Antifrost	R/W	0: Disabled **1: Enabled**		
Tank						
5.2	[6-0A]	Comfort setpoint	R/W	30~[6-0E]°C, step: 1°C **60°C**		
5.3	[6-0B]	Eco setpoint	R/W	30~min(50, [6-0E])°C, step: 1°C **45°C**		
5.4	[6-0C]	Reheat setpoint	R/W	30~min(50, [6-0E])°C, step: 1°C **45°C**		
5.6	[6-0D]	Heat up mode	R/W	**0: Reheat only** 1: Reheat + sched. 2: Scheduled only		
└ Disinfection						
5.7.1	[2-01]	Activation	R/W	0: No **1: Yes**		

Field settings table					Installer setting at variance with default value	
Breadcrumb	Field code	Setting name		Range, step **Default value**	Date	Value
5.7.2	[2-00]	Operation day	R/W	0: Each day 1: Monday 2: Tuesday 3: Wednesday 4: Thursday 5: Friday 6: Saturday **7: Sunday**		
5.7.3	[2-02]	Start time	R/W	0~23 hour, step: 1 hour **3**		
5.7.4	[2-03]	Tank setpoint	R/O	60°C **60°C**		
5.7.5	[2-04]	Duration	R/W	40~60 min, step: 5 min **40 min**		
Tank						
5.8	[6-0E]	Maximum	R/W	40~60°C, step: 1°C **60°C**		
5.9	[6-00]	Hysteresis	R/W	2~20°C, step: 1°C **6°C**		
5.A	[6-08]	Hysteresis	R/W	2~20°C, step: 1°C **10°C**		
5.B		Setpoint mode	R/W	**0: Fixed** 1: Weather dependent		
└ WD curve						
5.C	[0-0B]	Leaving water value for high ambient temp. for DHW WD curve.	R/W	35~[6-0E]°C, step: 1°C **55°C**		
5.C	[0-0C]	Leaving water value for low ambient temp. for DHW WD curve.	R/W	45~[6-0E]°C, step: 1°C **60°C**		
5.C	[0-0D]	High ambient temp. for DHW WD curve.	R/W	10~25°C, step: 1°C **15°C**		
5.C	[0-0E]	Low ambient temp. for DHW WD curve.	R/W	-40~5°C, step: 1°C **-10°C**		
Tank						
5.D	[6-01]	Margin	R/W	0~10°C, step: 1°C **2°C**		
User settings └ Quiet						
7.4.1		Activation	R/W	**0: OFF** 1: Quiet 2: More quiet 3: Most quiet 4: Automatic		
└ Electricity price						
7.5.1		High	R/W	0,00~990/kWh **1/kWh**		
7.5.2		Medium	R/W	0,00~990/kWh **1/kWh**		
7.5.3		Low	R/W	0,00~990/kWh **1/kWh**		
User settings						
7.6		Gas price	R/W	0,00~990/kWh 0,00~290/MBtu **1,0/kWh**		
Installer settings └ Configuration wizard └ System						
9.1.3.2	[E-03]	BUH type	R/O	**4: 9W**		
9.1.3.3	[E-05] [E-06] [E-07]	Domestic hot water	R/W	No DHW **Integrated**		
9.1.3.4	[4-06]	Emergency	R/W	0: Manual 1: Automatic (normal SH/ DHW ON) 2: Auto red SH/ DHW ON **3: Auto red SH/ DHW OFF** 4: Auto normal SH/ DHW OFF		
9.1.3.5	[7-02]	Number of zones	R/W	**0: Single zone** 1: Dual zone		
└ Backup heater						
9.1.4.1	[5-0D]	Voltage	R/W	0: 230V, 1~ **2: 400V, 3~**		
9.1.4.5	[4-07]	Maximum BUH capacity	R/W	[5-0D]=2: 0~9 kW, step 1 kW **9 kW** [5-0D]≠2: 0~6 kW, step 1 kW 6 kW		
└ Main zone						
9.1.5.1	[2-0C]	Emitter type	R/W	0: Underfloor heating 1: Fancoil unit **2: Radiator**		
9.1.5.2	[C-07]	Control	R/W	**0: LWT control** 1: Ext RT control 2: RT control		
9.1.5.3		Setpoint mode	R/W	0: Fixed 1: WD heating, fixed cooling **2: Weather dependent**		
9.1.5.4		Schedule	R/W	**0: No** 1: Yes		
9.1.5.5		WD curve type		0: 2-points **1: Slope-Offset**		
9.1.6	[1-00]	Low ambient temp. for LWT main zone heating WD curve.	R/W	-40~5°C, step: 1°C **-40°C**		
9.1.6	[1-01]	High ambient temp. for LWT main zone heating WD curve.	R/W	10~25°C, step: 1°C **15°C**		
9.1.6	[1-02]	Leaving water value for low ambient temp. for LWT main zone heating WD curve.	R/W	[9-01]~[9-00], step: 1°C [2-0C]=0 45°C [2-0C]=1 55°C [2-0C]=2 **65°C**		

Field settings table					Installer setting at variance with default value	
Breadcrumb	Field code	Setting name		Range, step **Default value**	Date	Value
9.1.6	[1-03]	Leaving water value for high ambient temp. for LWT main zone heating WD curve.	R/W	[9-01]~min(45, [9-00])°C , step: 1°C [2-0C]=0 22°C [2-0C]=1 35°C [2-0C]=2 **25°C**		
9.1.7	[1-06]	Low ambient temp. for LWT main zone cooling WD curve.	R/W	10~25°C, step: 1°C **20°C**		
9.1.7	[1-07]	High ambient temp. for LWT main zone cooling WD curve.	R/W	25~43°C, step: 1°C **35°C**		
9.1.7	[1-08]	Leaving water value for low ambient temp. for LWT main zone cooling WD curve.	R/W	[9-03]~[9-02]°C, step: 1°C **22°C**		
9.1.7	[1-09]	Leaving water value for high ambient temp. for LWT main zone cooling WD curve.	R/W	[9-03]~[9-02]°C, step: 1°C **18°C**		
		└ Additional zone				
9.1.8.1	[2-0D]	Emitter type	R/W	0: Underfloor heating 1: Fancoil unit **2: Radiator**		
9.1.8.3		Setpoint mode	R/W	0: Fixed 1: WD heating, fixed cooling **2: Weather dependent**		
9.1.8.4		Schedule	R/W	**0: No** 1: Yes		
9.1.9	[0-00]	Leaving water value for high ambient temp. for LWT add zone heating WD curve.	R/W	[9-05]~min(45,[9-06])°C, step: 1°C [2-0C]=0 22°C [2-0C]=1 35°C [2-0C]=2 **25°C**		
9.1.9	[0-01]	Leaving water value for low ambient temp. for LWT add zone heating WD curve.	R/W	[9-05]~[9-06]°C, step: 1°C [2-0C]=0 45°C [2-0C]=1 55°C [2-0C]=2 **65°C**		
9.1.9	[0-02]	High ambient temp. for LWT add zone heating WD curve.	R/W	10~25°C, step: 1°C **15°C**		
9.1.9	[0-03]	Low ambient temp. for LWT add zone heating WD curve.	R/W	-40~5°C, step: 1°C **-40°C**		
9.1.A	[0-04]	Leaving water value for high ambient temp. for LWT add zone cooling WD curve.	R/W	[9-07]~[9-08]°C, step: 1°C **8°C**		
9.1.A	[0-05]	Leaving water value for low ambient temp. for LWT add zone cooling WD curve.	R/W	[9-07]~[9-08]°C, step: 1°C **12°C**		
9.1.A	[0-06]	High ambient temp. for LWT add zone cooling WD curve.	R/W	25~43°C, step: 1°C **35°C**		
9.1.A	[0-07]	Low ambient temp. for LWT add zone cooling WD curve.	R/W	10~25°C, step: 1°C **20°C**		
		└ Tank				
9.1.B.1	[6-0D]	Heat up mode	R/W	**0: Reheat only** 1: Reheat + sched. 2: Scheduled only		
9.1.B.2	[6-0A]	Comfort setpoint	R/W	30~[6-0E]°C, step: 1°C **60°C**		
9.1.B.3	[6-0B]	Eco setpoint	R/W	30~min(50, [6-0E])°C, step: 1°C **45°C**		
9.1.B.4	[6-0C]	Reheat setpoint	R/W	30~min(50, [6-0E])°C, step: 1°C **45°C**		
9.1.B.5	[6-08]	Reheat hysteresis	R/W	2~20°C, step: 1°C **10°C**		
		└ Domestic hot water				
9.2.1	[E-05] [E-06] [E-07]	Domestic hot water	R/W	No DHW **Integrated**		
9.2.2	[D-02]	DHW pump	R/W	**0: No** 1: Secondary rtrn 2: Disinf. Shunt		
		└ Back up heater				
9.3.1	[E-03]	BUH type	R/O	**4: 9W**		
9.3.2	[5-0D]	Voltage	R/W	0: 230V, 1~ **2: 400V, 3~**		
9.3.6	[5-00]	Equilibrium: Deactivate backup heater (or external backup heat source in case of a bivalent system) above the equilibrium temperature for space heating?	R/W	0: No **1: Yes**		
9.3.7	[5-01]	Equilibrium temperature	R/W	-15~35°C, step: 1°C **0°C**		
9.3.8	[4-00]	Operation	R/W	0: Disabled **1: Enabled** 2: Only DHW		
9.3.9	[4-07]	Maximum BUH capacity	R/W	[5-0D]=2: 0~9 kW, step 1 kW **9 kW** [5-0D]≠2: 0~6 kW, step 1 kW 6 kW		
Installer settings						
		└ Emergency				
9.5.1	[4-06]	Emergency	R/W	0: Manual 1: Automatic (normal SH/ DHW ON) 2: Auto red SH/ DHW ON **3: Auto red SH/ DHW OFF** 4: Auto normal SH/ DHW OFF		
9.5.2	[7-06]	Compressor forced off	R/W	**0: Disabled** 1: Enabled		
		└ Balancing				
9.6.1	[5-02]	Space heating priority	R/W	**0: Disabled** 1: Enabled		
9.6.2	[5-03]	Priority temperature	R/W	-15~35°C, step: 1°C **0°C**		
9.6.4	[8-02]	Anti-recycle timer	R/W	0~10 hour, step: 0,5 hour **0,5 hour**		
9.6.5	[8-00]	Minimum running timer	R/W	0~20 min, step 1 min **1 min**		

Field settings table					Installer setting at variance with default value	
Breadcrumb	Field code	Setting name		Range, step **Default value**	Date	Value
9.6.6	[8-01]	Maximum running timer	R/W	5~95 min, step: 5 min **30 min**		
9.6.7	[8-04]	Additional timer	R/W	0~95 min, step: 5 min **95 min**		
Installer settings						
9.7	[4-04]	Water pipe freeze prevention	R/O	0: Intermittent 1: continuous **2: Disabled**		
└ Benefit kWh power supply						
9.8.1	[D-01]	Benefit kWh power supply	R/W	**0: No** 1: Active open 2: Active closed 3: Safety thermostat		
9.8.2	[D-00]	Allow heater	R/W	**0: None** 1: BSH only 2: BUH only 3: All heaters		
9.8.3	[D-05]	Allow pump	R/W	0: Forced off **1: As normal**		
└ Power consumption control						
9.9.1	[4-08]	Power consumption control	R/W	**0: No limitation** 1: Continuous 2: Digital inputs 3: Current sensors		
9.9.2	[4-09]	Type	R/W	0: Current **1: Power**		
9.9.3	[5-05]	Limit	R/W	0~50 A, step: 1 A **16 A**		
9.9.4	[5-05]	Limit 1	R/W	0~50 A, step: 1 A **16 A**		
9.9.5	[5-06]	Limit 2	R/W	0~50 A, step: 1 A **16 A**		
9.9.6	[5-07]	Limit 3	R/W	0~50 A, step: 1 A **16 A**		
9.9.7	[5-08]	Limit 4	R/W	0~50 A, step: 1 A **16 A**		
9.9.8	[5-09]	Limit	R/W	0~20 kW, step: 0,5 kW **5 kW**		
9.9.9	[5-09]	Limit 1	R/W	0~20 kW, step: 0,5 kW **5 kW**		
9.9.A	[5-0A]	Limit 2	R/W	0~20 kW, step: 0,5 kW **5 kW**		
9.9.B	[5-0B]	Limit 3	R/W	0~20 kW, step: 0,5 kW **5 kW**		
9.9.C	[5-0C]	Limit 4	R/W	0~20 kW, step: 0,5 kW **5 kW**		
9.9.D	[4-01]	Priority heater	R/W	**0: None** 1: BSH 2: BUH		
9.9.E	[4-0E]	Current sensor offset	R/W	-6~6A, step: 0,5 A **0 A**		
9.9.F	[7-07]	BBR16 limit activated?	R/W	**0: Disabled** 1: Enabled		
└ Energy metering						
9.A.1	[D-08]	Electricity meter 1	R/W	**0: No** 1: 0,1 pulse/kWh 2: 1 pulse/kWh 3: 10 pulse/kWh 4: 100 pulse/kWh 5: 1000 pulse/kWh		
9.A.2	[D-09]	Electricity meter 2	R/W	**0: No** 1: 0,1 pulse/kWh 2: 1 pulse/kWh 3: 10 pulse/kWh 4: 100 pulse/kWh 5: 1000 pulse/kWh		
└ Sensors						
9.B.1	[C-08]	External sensor	R/W	**0: No** 1: Outdoor sensor 2: Room sensor		
9.B.2	[2-0B]	Ext. amb. sensor offset	R/W	-5~5°C, step: 0,5°C **0°C**		
9.B.3	[1-0A]	Averaging time	R/W	**0: No averaging** 1: 12 hours 2: 24 hours 3: 48 hours 4: 72 hours		
└ Bivalent						
9.C.1	[C-02]	Bivalent	R/W	**0: No** 1: Bivalent		
9.C.2	[7-05]	Boiler efficiency	R/W	**0: Very high** 1: High 2: Medium 3: Low 4: Very low		
9.C.3	[C-03]	Temperature	R/W	-25~25°C, step: 1°C **0°C**		
9.C.4	[C-04]	Hysteresis	R/W	2~10°C, step 1°C **3°C**		
Installer settings						
9.D	[C-09]	Alarm output	R/W	**0: Normally open** 1: Normally closed		
9.E	[3-00]	Auto restart	R/W	0: No **1: Yes**		
9.F	[E-08]	Power saving function	R/O	0: disabled **1: Enabled**		
9.G		Disable protections	R/W	0: No **1: Yes**		
└ Overview field settings						

(#) Setting is not applicable for this unit.

(*1) *X*_(*2) *H*

Field settings table					Installer setting at variance with default value	
Breadcrumb	Field code	Setting name		Range, step **Default value**	Date	Value
9.I	[0-00]	Leaving water value for high ambient temp. for LWT add zone heating WD curve.	R/W	[9-05]~min(45,[9-06])°C, step: 1°C [2-0C]=0 22°C [2-0C]=1 35°C [2-0C]=2 **25°C**		
9.I	[0-01]	Leaving water value for low ambient temp. for LWT add zone heating WD curve.	R/W	[9-05]~[9-06]°C, step: 1°C [2-0C]=0 45°C [2-0C]=1 55°C [2-0C]=2 **65°C**		
9.I	[0-02]	High ambient temp. for LWT add zone heating WD curve.	R/W	10~25°C, step: 1°C **15°C**		
9.I	[0-03]	Low ambient temp. for LWT add zone heating WD curve.	R/W	-40~5°C, step: 1°C **-40°C**		
9.I	[0-04]	Leaving water value for high ambient temp. for LWT add zone cooling WD curve.	R/W	[9-07]~[9-08]°C, step: 1°C **8°C**		
9.I	[0-05]	Leaving water value for low ambient temp. for LWT add zone cooling WD curve.	R/W	[9-07]~[9-08]°C, step: 1°C **12°C**		
9.I	[0-06]	High ambient temp. for LWT add zone cooling WD curve.	R/W	25~43°C, step: 1°C **35°C**		
9.I	[0-07]	Low ambient temp. for LWT add zone cooling WD curve.	R/W	10~25°C, step: 1°C **20°C**		
9.I	[0-0B]	Leaving water value for high ambient temp. for DHW WD curve.	R/W	35~[6-0E]°C, step: 1°C **55°C**		
9.I	[0-0C]	Leaving water value for low ambient temp. for DHW WD curve.	R/W	45~[6-0E]°C, step: 1°C **60°C**		
9.I	[0-0D]	High ambient temp. for DHW WD curve.	R/W	10~25°C, step: 1°C **15°C**		
9.I	[0-0E]	Low ambient temp. for DHW WD curve.	R/W	-40~5°C, step: 1°C **-10°C**		
9.I	[1-00]	Low ambient temp. for LWT main zone heating WD curve.	R/W	-40~5°C, step: 1°C **-40°C**		
9.I	[1-01]	High ambient temp. for LWT main zone heating WD curve.	R/W	10~25°C, step: 1°C **15°C**		
9.I	[1-02]	Leaving water value for low ambient temp. for LWT main zone heating WD curve.	R/W	[9-01]~[9-00], step: 1°C [2-0C]=0 45°C [2-0C]=1 55°C [2-0C]=2 **65°C**		
9.I	[1-03]	Leaving water value for high ambient temp. for LWT main zone heating WD curve.	R/W	[9-01]~min(45, [9-00])°C , step: 1°C [2-0C]=0 22°C [2-0C]=1 35°C [2-0C]=2 **25°C**		
9.I	[1-04]	Weather dependent cooling of the main leaving water temperature zone.	R/W	0: Disabled **1: Enabled**		
9.I	[1-05]	Weather dependent cooling of the additional leaving water temperature zone	R/W	0: Disabled **1: Enabled**		
9.I	[1-06]	Low ambient temp. for LWT main zone cooling WD curve.	R/W	10~25°C, step: 1°C **20°C**		
9.I	[1-07]	High ambient temp. for LWT main zone cooling WD curve.	R/W	25~43°C, step: 1°C **35°C**		
9.I	[1-08]	Leaving water value for low ambient temp. for LWT main zone cooling WD curve.	R/W	[9-03]~[9-02]°C, step: 1°C **22°C**		
9.I	[1-09]	Leaving water value for high ambient temp. for LWT main zone cooling WD curve.	R/W	[9-03]~[9-02]°C, step: 1°C **18°C**		
9.I	[1-0A]	What is the averaging time for the outdoor temp?	R/W	**0: No averaging** 1: 12 hours 2: 24 hours 3: 48 hours 4: 72 hours		
9.I	[1-0B]	What is the desired delta T in heating for the main zone?	R/W	3~10°C, step: 1°C **10°C**		
9.I	[1-0C]	What is the desired delta T in heating for the additional zone?	R/W	3~10°C, step: 1°C **10°C**		
9.I	[1-0D]	What is the desired delta T in cooling for the main zone?	R/W	3~10°C, step: 1°C **5°C**		
9.I	[1-0E]	What is the desired delta T in cooling for the additional zone?	R/W	3~10°C, step: 1°C **5°C**		
9.I	[2-00]	When should the disinfection function be executed?	R/W	0: Each day 1: Monday 2: Tuesday 3: Wednesday 4: Thursday 5: Friday 6: Saturday **7: Sunday**		
9.I	[2-01]	Should the disinfection function be executed?	R/W	0: No **1: Yes**		
9.I	[2-02]	When should the disinfection function start?	R/W	0~23 hour, step: 1 hour **3**		
9.I	[2-03]	What is the disinfection target temperature?	R/O	**60°C**		
9.I	[2-04]	How long must the tank temperature be maintained?	R/W	40~60 min, step: 5 min **40 min**		
9.I	[2-05]	Room antifrost temperature	R/W	4~16°C, step: 1°C **8°C**		
9.I	[2-06]	Room frost protection	R/W	0: Disabled **1: Enabled**		
9.I	[2-09]	Adjust the offset on the measured room temperature	R/W	-5~5°C, step: 0,5°C **0°C**		
9.I	[2-0A]	Adjust the offset on the measured room temperature	R/W	-5~5°C, step: 0,5°C **0°C**		
9.I	[2-0B]	What is the required offset on the measured outdoor temp.?	R/W	-5~5°C, step: 0,5°C **0°C**		

Field settings table					Installer setting at variance with default value	
Breadcrumb	Field code	Setting name		Range, step **Default value**	Date	Value
9.I	[2-0C]	What emitter type is connected to the main LWT zone?	R/W	0: Underfloor heating 1: Fancoil unit **2: Radiator**		
9.I	[2-0D]	What emitter type is connected to the additional LWT zone?	R/W	0: Underfloor heating 1: Fancoil unit **2: Radiator**		
9.I	[2-0E]	What is the maximum allowed current over the heatpump ?	R/W	20~50 A, step: 1 A **50 A**		
9.I	[3-00]	Is auto restart of the unit allowed?	R/W	0: No **1: Yes**		
9.I	[3-01]	--		**0**		
9.I	[3-02]	--		**1**		
9.I	[3-03]	--		**4**		
9.I	[3-04]	--		**2**		
9.I	[3-05]	--		**1**		
9.I	[3-06]	What is the maximum desired room temperature in heating?	R/W	18~30°C, step: 0,5°C **30°C**		
9.I	[3-07]	What is the mimimum desired room temperature in heating?	R/W	12~18°C, step: 0,5°C **12°C**		
9.I	[3-08]	What is the maximum desired room temperature in cooling?	R/W	25~35°C, step: 0,5°C **35°C**		
9.I	[3-09]	What is the minimum desired room temperature in cooling?	R/W	15~25°C, step: 0,5°C **15°C**		
9.I	[4-00]	What is the BUH operation mode?	R/W	0: Disabled **1: Enabled** 2: Only DHW		
9.I	[4-01]	Which electric heater has priority?	R/W	**0: None** 1: BSH 2: BUH		
9.I	[4-02]	Below which outdoor temperature is heating allowed?	R/W	14~35°C, step: 1°C **16°C**		
9.I	[4-03]	--		**3**		
9.I	[4-04]	Water pipe freeze prevention	R/O	0: Intermittent 1: continuous **2: Disabled**		
9.I	[4-05]	--		**0**		
9.I	[4-06]	Emergency setting	R/W	0: Manual 1: Automatic (normal SH/ DHW ON) 2: Auto red SH/ DHW ON **3: Auto red SH/ DHW OFF** 4: Auto normal SH/ DHW OFF		
9.I	[4-07]	Maximum BUH capacity	R/W	[5-0D]=2: 0~9 kW, step: 1 kW **9 kW** [5-0D]≠2: 0~6 kW, step: 1 kW 6 kW		
9.I	[4-08]	Which power limitation mode is required on the system?	R/W	**0: No limitation** 1: Continuous 2: Digital inputs 3: Current sensors		
9.I	[4-09]	Which power limitation type is required?	R/W	0: Current **1: Power**		
9.I	[4-0A]	--		**1**		
9.I	[4-0B]	Automatic cooling/heating changeover hysteresis.	R/W	1~10°C, step: 0,5°C **1°C**		
9.I	[4-0D]	Automatic cooling/heating changeover offset.	R/W	1~10°C, step: 0,5°C **3°C**		
9.I	[4-0E]	Current sensor offset	R/W	-6~6 A, step: 0,5 A **0 A**		
9.I	[5-00]	Equilibrium: Deactivate backup heater (or external backup heat source in case of a bivalent system) above the equilibrium temperature for space heating?	R/W	0: No **1: Yes**		
9.I	[5-01]	What is the equilibrium temperature for the building?	R/W	-15~35°C, step: 1°C **0°C**		
9.I	[5-02]	Space heating priority.	R/W	**0: Disabled** 1: Enabled		
9.I	[5-03]	Space heating priority temperature.	R/W	-15~35°C, step: 1°C **0°C**		
9.I	[5-04]	--		**10**		
9.I	[5-05]	What is the requested limit for DI1?	R/W	0~50 A, step: 1 A **16 A**		
9.I	[5-06]	What is the requested limit for DI2?	R/W	0~50 A, step: 1 A **16 A**		
9.I	[5-07]	What is the requested limit for DI3?	R/W	0~50 A, step: 1 A **16 A**		
9.I	[5-08]	What is the requested limit for DI4?	R/W	0~50 A, step: 1 A **16 A**		
9.I	[5-09]	What is the requested limit for DI1?	R/W	0~20 kW, step: 0,5 kW **5 kW**		
9.I	[5-0A]	What is the requested limit for DI2?	R/W	0~20 kW, step: 0,5 kW **5 kW**		
9.I	[5-0B]	What is the requested limit for DI3?	R/W	0~20 kW, step: 0,5 kW **5 kW**		
9.I	[5-0C]	What is the requested limit for DI4?	R/W	0~20 kW, step: 0,5 kW **5 kW**		
9.I	[5-0D]	Backup heater voltage	R/W	0: 230V, 1~ **2: 400V, 3~**		
9.I	[5-0E]	--		**1**		
9.I	[6-00]	The temperature difference determining the heat pump ON temperature.	R/W	2~20°C, step: 1°C **6°C**		
9.I	[6-01]	The temperature difference determining the heat pump OFF temperature.	R/W	0~10°C, step: 1°C **2°C**		
9.I	[6-02]	--		**0**		
9.I	[6-03]	--		**3**		
9.I	[6-04]	--		**6**		
9.I	[6-05]	--		**0**		
9.I	[6-06]	--		**0**		
9.I	[6-07]	--		**0**		
9.I	[6-08]	What is the hysteresis to be used in reheat mode?	R/W	2~20°C, step: 1°C **10°C**		
9.I	[6-09]	--		**0**		
9.I	[6-0A]	What is the desired comfort storage temperature?	R/W	30~[6-0E]°C, step: 1°C **60°C**		

Field settings table					Installer setting at variance with default value	
Breadcrumb	Field code	Setting name		Range, step **Default value**	Date	Value
9.I	[6-0B]	What is the desired eco storage temperature?	R/W	30~min(50, [6-0E])°C, step: 1°C **45°C**		
9.I	[6-0C]	What is the desired reheat temperature?	R/W	30~min(50, [6-0E])°C, step: 1°C **45°C**		
9.I	[6-0D]	What is the desired DHW production type?	R/W	**0: Reheat only** 1: Reheat + sched. 2: Scheduled only		
9.I	[6-0E]	What is the maximum temperature setpoint?	R/W	40~60°C, step: 1°C **60°C**		
9.I	[7-00]	--		**0**		
9.I	[7-01]	--		**2**		
9.I	[7-02]	How many leaving water temperature zones are there?	R/W	**0: 1 LWT zone** 1: 2 LWT zones		
9.I	[7-03]	--		**2.5**		
9.I	[7-04]	--		**0**		
9.I	[7-05]	Boiler efficiency	R/W	**0: Very high** 1: High 2: Medium 3: Low 4: Very low		
9.I	[7-06]	Compressor forced off	R/W	**0: Disabled** 1: Enabled		
9.I	[7-07]	BBR16 limit activated?	R/W	**0: Disabled** 1: Enabled		
9.I	[8-00]	Minimum running time for domestic hot water operation.	R/W	0~20 min, step 1 min **1 min**		
9.I	[8-01]	Maximum running time for domestic hot water operation.	R/W	5~95 min, step: 5 min **30 min**		
9.I	[8-02]	Anti-recycling time.	R/W	0~10 hour, step: 0,5 hour **0,5 hour**		
9.I	[8-03]	--		**50**		
9.I	[8-04]	Additional running time for the maximum running time.	R/W	0~95 min, step: 5 min **95 min**		
9.I	[8-05]	Allow modulation of the LWT to control the room temp?	R/W	**0: No** 1: Yes		
9.I	[8-06]	Leaving water temperature maximum modulation.	R/W	0~10°C, step: 1°C **5°C**		
9.I	[8-07]	What is the desired comfort main LWT in cooling?	R/W	[9-03]~[9-02], step: 1°C **18°C**		
9.I	[8-08]	What is the desired eco main LWT in cooling?	R/W	[9-03]~[9-02], step: 1°C **20°C**		
9.I	[8-09]	What is the desired comfort main LWT in heating?	R/W	[9-01]~[9-00], step: 1°C **35°C**		
9.I	[8-0A]	What is the desired eco main LWT in heating?	R/W	[9-01]~[9-00], step: 1°C **33°C**		
9.I	[8-0B]	--		**13**		
9.I	[8-0C]	--		**10**		
9.I	[8-0D]	--		**16**		
9.I	[9-00]	What is the maximum desired LWT for main zone in heating?	R/W	[2-0C]=0 37~55, step: 1°C 55°C [2-0C]≠0 37~65, step: 1°C **65°C**		
9.I	[9-01]	What is the mimimum desired LWT for main zone in heating?	R/W	15~37°C, step: 1°C **15°C**		
9.I	[9-02]	What is the maximum desired LWT for main zone in cooling?	R/W	18~22°C, step: 1°C **22°C**		
9.I	[9-03]	What is the mimimum desired LWT for main zone in cooling?	R/W	5~18°C, step: 1°C **5°C**		
9.I	[9-04]	Leaving water temperature overshoot temperature.	R/W	1~4°C, step: 1°C **4°C**		
9.I	[9-05]	What is the mimimum desired LWT for add. zone in heating?	R/W	15~37°C, step: 1°C **15°C**		
9.I	[9-06]	What is the maximum desired LWT for add. zone in heating?	R/W	[2-0C]=0 37~55, step: 1°C 55°C [2-0C]≠0 37~65, step: 1°C **65°C**		
9.I	[9-07]	What is the mimimum desired LWT for add. zone in cooling?	R/W	5~18°C, step: 1°C **5°C**		
9.I	[9-08]	What is the maximum desired LWT for add. zone in cooling?	R/W	18~22°C, step: 1°C **22°C**		
9.I	[9-0C]	Room temperature hysteresis.	R/W	1~6°C, step: 0,5°C **1 °C**		
9.I	[9-0D]	Pump speed limitation	R/W	0~8, step:1 0: No limitation 1~4: 90~60% pump speed 5~8: 90~60% pump speed during sampling **6**		
9.I	[9-0E]	--		**6**		
9.I	[A-00]	--		**1**		
9.I	[A-01]	--		**0**		
9.I	[A-02]	--		**0**		
9.I	[A-03]	--		**0**		
9.I	[A-04]	What is the brine anti freeze temperature?	R/W	0: 2°C 1: -2°C 2: -4°C 3: -6°C 4: -9°C 5: -12°C **6: -15°C** 7: -18°C		
9.I	[B-00]	--		**0**		
9.I	[B-01]	--		**0**		
9.I	[B-02]	--		**0**		
9.I	[B-03]	--		**0**		
9.I	[B-04]	--		**0**		
9.I	[C-00]	--		**0**		
9.I	[C-01]	--		**0**		

Field settings table

Breadcrumb	Field code	Setting name		Range, step **Default value**	Installer setting at variance with default value Date	 Value
9.I	[C-02]	Is an external backup heat source connected?	R/W	**0: No** 1: Bivalent		
9.I	[C-03]	Bivalent activation temperature.	R/W	-25~25°C, step: 1°C **0°C**		
9.I	[C-04]	Bivalent hysteresis temperature.	R/W	2~10°C, step 1°C **3°C**		
9.I	[C-05]	What is the thermo request contact type for the main zone?	R/W	0: - 1: 1 contact **2: 2 contacts**		
9.I	[C-06]	What is the thermo request contact type for the add. zone?	R/W	0: - 1: 1 contact **2: 2 contacts**		
9.I	[C-07]	What is the unit control method in space operation?	R/W	**0: LWT control** 1: Ext RT control 2: RT control		
9.I	[C-08]	Which type of external sensor is installed?	R/W	**0: No** 1: Outdoor sensor 2: Room sensor		
9.I	[C-09]	What is the required alarm output contact type?	R/W	**0: Normally open** 1: Normally closed		
9.I	[C-0A]	--		**0**		
9.I	[C-0B]	Brine pressure switch present?	R/W	**0: Not present** 1: Present		
9.I	[D-00]	Which heaters are permitted if prefer. kWh rate PS is cut?	R/W	**0: None** 1: BSH only 2: BUH only 3: All heaters		
9.I	[D-01]	Contact type of preferential kWh rate PS installation?	R/W	**0: No** 1: Active open 2: Active closed 3: Safety thermostat		
9.I	[D-02]	Which type of DHW pump is installed?	R/W	**0: No** 1: Secondary rtrn 2: Disinf. Shunt		
9.I	[D-03]	Leaving water temperature compensation around 0°C.	R/W	0: No 1: increase 2°C, span 4°C **2: increase 4°C, span 4°C** 3: increase 2°C, span 8°C 4: increase 4°C, span 8°C		
9.I	[D-04]	Is a demand PCB connected?	R/W	**0: No** 1: Pwr consmp ctrl		
9.I	[D-05]	Is the pump allowed to run if prefer. kWh rate PS is cut?	R/W	0: Forced off **1: As normal**		
9.I	[D-07]	--		**0**		
9.I	[D-08]	Is an external kWh meter used for power measurement?	R/W	**0: No** 1: 0,1 pulse/kWh 2: 1 pulse/kWh 3: 10 pulse/kWh 4: 100 pulse/kWh 5: 1000 pulse/kWh		
9.I	[D-09]	Is an external kWh meter used for power measurement?	R/W	**0: No** 1: 0,1 pulse/kWh 2: 1 pulse/kWh 3: 10 pulse/kWh 4: 100 pulse/kWh 5: 1000 pulse/kWh		
9.I	[D-0A]	--		**0**		
9.I	[D-0B]	--		**2**		
9.I	[E-00]	Which type of unit is installed?	R/O	0~5 **5: GSHP**		
9.I	[E-01]	Which type of compressor is installed?	R/O	**1**		
9.I	[E-02]	What is the indoor unit software type?	R/O	**0: Reversible (*1)** **1: Heating only (*2)**		
9.I	[E-03]	What kind of heater?	R/O	**4: 9W**		
9.I	[E-04]	Is the power saving function available on the outdoor unit?	R/O	0: No **1: Yes**		
9.I	[E-05]	Can the system prepare domestic hot water?	R/W	0: No **1: Yes**		
9.I	[E-06]	Is a DHW tank installed in the system?	R/O	0: No **1: Yes**		
9.I	[E-07]	What kind of DHW tank is installed?	R/O	**1: Integrated**		
9.I	[E-08]	Power saving function for outdoor unit.	R/O	0: disabled **1: Enabled**		
9.I	[E-09]	--		**1**		
9.I	[E-0B]	Is a bi-zone kit installed?	R/O	**0**		
9.I	[E-0C]	--		**0**		
9.I	[E-0D]	--		**0**		
9.I	[E-0E]	--		**0**		
9.I	[F-00]	Pump operation allowed outside range.	R/W	**0: Disabled** 1: Enabled		
9.I	[F-01]	Above which outdoor temperature is cooling allowed?	R/W	10~35°C, step: 1°C **20°C**		
9.I	[F-02]	--		**3**		
9.I	[F-03]	--		**5**		
9.I	[F-04]	--		**0**		
9.I	[F-05]	--		**0**		
9.I	[F-09]	Pump operation during flow abnormality.	R/W	**0: Disabled** 1: Enabled		
9.I	[F-0A]	--		**0**		
9.I	[F-0B]	Close shut-off valve during thermo OFF?	R/W	**0: No** 1: Yes		
9.I	[F-0C]	Close shut-off valve during cooling?	R/W	0: No **1: Yes**		
9.I	[F-0D]	What is the pump operation mode?	R/W	0: Continuous **1: Sample** 2: Request		
└ Brine freezing temperature						

(#) Setting is not applicable for this unit.

(*1) *X*_(*2) *H*

Field settings table					Installer setting at variance with default value	
Breadcrumb	Field code	Setting name		Range, step **Default value**	Date	Value
9.M	[A-04]	What is the brine anti freeze temperature?	R/W	0: 2°C 1: -2°C 2: -4°C 3: -6°C 4: -9°C 5: -12°C **6: -15°C** 7: -18°C		

20 Data book

Table of contents

Specifications 263
Technical and electrical specifications 264
Options 275
Options 276
Capacity tables 277
Capacity table legend 278
Cooling capacity tables 279
Heating capacity tables 280
Certification programs 281
Dimensional drawings 283
Dimensional drawings 284
Centre of gravity 285
Centre of gravity 286
Piping diagrams 287
Piping diagrams 288
Wiring diagrams 289
Wiring diagrams 290
External connection diagrams 295
External connection diagrams 296
Sound data 297
Sound power spectrum 298
Installation 300
Installation method 301
Operation range 302
Operation range 303
Hydraulic performance 304
Static pressure drop unit 305

2 Specifications
1 - 2 EGSAX-UD9W

Technical specifications					EGSAH06UD9W	EGSAH10UD9W
Heating capacity	Min.			kW	0.85	
	Nom.			kW	3.35	5.49
	Max.			kW	7.98	9.55
Power input	Nom.			kW	0.74	1.17
COP					4.51	4.70
Casing	Colour				White + Black	
	Material				Precoated sheet metal	-
Dimensions	Unit	Height		mm	1,891	
		Width		mm	597	
		Depth		mm	666	
	Packed unit	Height		mm	2,202	
		Width		mm	720	
		Depth		mm	775	
Weight	Unit			kg	222	
	Packed unit			kg	237	
Packing	Material				Wood / Carton / PE wrapping foil / Metal	
	Weight			kg	15	
Compressor	Type				Hermetically sealed swing compressor	
	Model				2YC40JXD#C	
PED	Category				Category II	
	Most critical part	Name			Compressor	
		Ps*DN		bar	42	
		Ps*V		Bar*l	64	
Pump	Type				Grundfos UPM3LK	
	Nr of speeds				PWM	
	Power input			W	75	
Water side Heat exchanger	Type				Plate heat exchanger	
	Quantity				1	
	Water volume			l	1.76	
	Insulation material				Elastomeric foam	
Brine pump	Type				Grundfos UPMXL Geo	
	Power input			W	180	
Brine heat exchanger	Quantity				1	
	Brine volume			l	1.94	
Tank	Energy efficiency class				B	
	Water volume			l	180	
Tank	Material				Stainless steel (EN 1.4521)	
	Maximum water temperature			°C	60.0	
	Maximum water pressure			bar	10	
	Insulation	Material			Polyurethane foam	
		Heat loss		kWh/24h	1.35	
	Corrosion protection				Pickling	
Heat exchanger	Internal coil volume			l	9.1	
3-way valve	Coefficient of flow (kV)	Space heating		m^3/h	10	
		Domestic hot water tank		m^3/h	8	
Water circuit	Piping connections diameter			mm	22	
	Safety valve			bar	3	
	Manometer				Digital	
	Drain valve / fill valve				Yes	
	Shut off valve				Yes	
	Air purge valve				Yes	
	Total water volume			l	5.1	
	Heating water system	Water volume	Min.	l	20	
Water circuit - Domestic hot water side	Piping connections	Cold water in / Hot water out	Diameter	mm	22	
		Recirculation connection		inch	G 3/4" FEMALE	
Brine circuit	Piping connections diameter			mm	28	
	Safety valve			bar	3	
Space heating	Cold climate water outlet 55°C	General	SCOP		4.00 (1)	4.15 (1)
Brine circuit	Drain valve / fill valve				Yes	
	Air purge valve				No	
	Total volume			l	5.0	
Refrigerant	Type				R-32	
	GWP				675.0	
	Charge			TCO2Eq	1.15	
	Charge			kg	1.70	
	Circuits	Quantity			1	
Refrigerant oil	Type				FW68DA	
	Charged volume			l	0.7	

2 Specifications

1 - 2 EGSAX-UD9W

Technical specifications					EGSAH06UD9W	EGSAH10UD9W
Operation range	Installation space	Min.		°C	5	
		Max.		°C	35	
	Brine side	Min.		°C	-10	
		Max.		°C	30	
	Heating	Water side	Min.	°C	5	
Operation range	Heating	Water side	Max.	°C	65	
	Domestic hot water	Water side	Min.	°C	25	
			Max.	°C	60	
Safety devices	Item	01			Thermal cut out	
		02			Temperature and pressure relief valve: 90-95°C	
General	Supplier/Manufacturer details	Name and address			Daikin Europe N.V. - Zandvoordestraat 300, 8400 Oostende, Belgium	
		Name or trademark			Daikin Europe N.V.	
	Product description	Air-to-water heat pump			No	
		Brine-to-water heat pump			Yes	
		Heat pump combination heater			No	
		Low-temperature heat pump			No	
		Supplementary heater integrated			Yes	
		Water-to-water heat pump			Yes	
	LW(A) Sound power level	Indoor		dB(A)	39.0	41.0
Sound condition Ecodesign and energy label					Sound power in heating mode, measured according to the EN12102 under conditions of the EN14825	
Sound power level	Range			dB(A)	From 36 to 44 (46 in boost mode), condition B0/-3 W30/35	From 36 to 47, condition B0/-3 W30/35
Tank	Name				Stainless steel domestic hot water tank 180 l	
Space heating general	Brine/water to water unit	Rated water/brine flow		m^3/h	1.3	1.7
	Other	Pck (Crankcase heater mode)		kW	0.000	
		Poff (Off mode)		kW	0.015	
		Psb (Standby mode)		kW	0.015	
		Pto (Thermostat off)		kW	0.024	
Domestic hot water heating	General	Declared load profile			L	
	Average climate	AEC (Annual electricity consumption)		kWh	877	
		ηwh (water heating efficiency)		%	117	
		Qelec (Daily electricity consumption)		kWh	4.140	
		Qfuel (Daily fuel consumption)		kWh	0.000	
		Water heating energy efficiency class			A+	
	Cold climate	AEC (Annual electricity consumption)		kWh	877	
		ηwh (water heating efficiency)		%	117	
		Qelec (Daily electricity consumption)		kWh	4.140	
		Qfuel (Daily fuel consumption)		kWh	0.000	
	Warm climate	AEC (Annual electricity consumption)		kWh	877	
		ηwh (water heating efficiency)		%	117	
		Qelec (Daily electricity consumption)		kWh	4.140	
		Qfuel (Daily fuel consumption)		kWh	0.000	
Space heating	Average climate water outlet	General	Annual energy consumption	kWh	3,447	4,393

2 Specifications
1 - 2 EGSAX-UD9W

Technical specifications					EGSAH06UD9W	EGSAH10UD9W
Space heating	Average climate water outlet 55°C	General	ηs (Seasonal space heating efficiency)	%	141	152
			Prated at -10°C	kW	6.2	8.5
			SCOP		3.72 (1)	4.00 (1)
			Seasonal space heating eff. class		A++	A+++
		A Condition (-7°CDB/-8°CWB)	Cdh (Degradation heating)		1.0	-
			COPd		3.13	3.15
			Pdh	kW	5.5	7.5
		B Condition (2°CDB/1°CWB)	Cdh (Degradation heating)		1.0	
			COPd		3.81	4.09
			Pdh	kW	3.3	4.7
		C Condition (7°CDB/6°CWB)	Cdh (Degradation heating)		1.0	
			COPd		4.33	4.54
			Pdh	kW	2.2	3.0
		D Condition (12°CDB/11°CWB)	Cdh (Degradation heating)		1.0	0.9
			COPd		3.65	4.59
			Pdh	kW	1.0	1.4
		Tol (temperature operating limit)	COPd		2.90	2.85
			Pdh	kW	6.4	8.5
			TOL	°C	-10	
		Tbiv (bivalent temperature)	COPd		2.90	2.85
			Pdh	kW	6.4	8.5
			Tbiv	°C	-10	
	Cold climate water outlet 55°C	General	Annual energy consumption	kWh	3,820	5,047
			ηs (Seasonal space heating efficiency)	%	152	158
			Prated at -22°C	kW	6.2	8.5
	Cold climate water outlet 35°C	General	SCOP		5.13 (1)	5.32 (1)
	Cold climate water outlet 55°C	A Condition (-7°CDB/-8°CWB)	Cdh (Degradation heating)		1.0	
			COPd		3.84	3.92
			Pdh	kW	3.8	5.4
		B Condition (2°CDB/1°CWB)	Cdh (Degradation heating)		1.0	
			COPd		4.32	4.58
			Pdh	kW	2.3	3.3
		C Condition (7°CDB/6°CWB)	Cdh (Degradation heating)		0.9	1.0
			COPd		4.60	4.73
			Pdh	kW	1.6	2.1
		D Condition (12°CDB/11°CWB)	COPd		3.99	3.82
			Pdh	kW	1.0	

2 Specifications
1 - 2 EGSAX-UD9W

Technical specifications					EGSAH06UD9W	EGSAH10UD9W
Space heating	Cold climate water outlet 55°C	Tol (temperature operating limit)	COPd		2.90	2.85
			Pdh	kW	6.4	8.5
			TOL	°C	-22	
		Tbiv (bivalent temperature)	COPd		2.90	2.85
			Pdh	kW	6.4	8.5
			Tbiv	°C	-22	
	Warm climate water outlet 55°C	General	Annual energy consumption	kWh	2,189	2,837
			ηs (Seasonal space heating efficiency)	%	143	152
			Prated at 2°C	kW	6.2	8.5
			SCOP		3.78 (1)	4.00 (1)
		B Condition (2°CDB/1°CWB)	Cdh (Degradation heating)		1.0	
			COPd		2.90	2.85
			Pdh	kW	6.4	8.5
		C Condition (7°CDB/6°CWB)	Cdh (Degradation heating)		1.0	
			COPd		3.58	3.72
			Pdh	kW	4.1	5.4
		D Condition (12°CDB/11°CWB)	Cdh (Degradation heating)		1.0	
			COPd		4.47	4.76
			Pdh	kW	1.9	2.5
		Tbiv (bivalent temperature)	COPd		2.90	2.85
			Pdh	kW	6.4	8.5
			Tbiv	°C	2	
	Average climate water outlet 35°C	General	Annual energy consumption	kWh	2,447	3,428
			ηs (Seasonal space heating efficiency)	%	195	197
			Prated at -10°C	kW	6.2	8.5
			SCOP		5.06 (1)	5.12 (1)
			Seasonal space heating eff. class		A+++	
		A Condition (-7°CDB/-8°CWB)	COPd		4.84	4.51
			Pdh	kW	5.6	7.7
		B Condition (2°CDB/1°CWB)	Cdh (Degradation heating)		1.0	
			COPd		5.36	5.43
			Pdh	kW	3.4	4.6
		C Condition (7°CDB/6°CWB)	Cdh (Degradation heating)		1.0	
			COPd		5.42	5.38
			Pdh	kW	2.1	2.9
		D Condition (12°CDB/11°CWB)	Cdh (Degradation heating)		0.9	
			COPd		4.57	5.10

2 Specifications
1 - 2 EGSAX-UD9W

Technical specifications					EGSAH06UD9W	EGSAH10UD9W
Space heating	Average climate water outlet 35°C	D Condition (12°CDB/11°CWB)	Pdh	kW	1.1	1.4
			COPd		4.67	4.29
		Tol (temperature operating limit)	Pdh	kW	6.0	8.6
			TOL	°C	-10	
		Tbiv (bivalent temperature)	COPd		4.67	4.29
			Pdh	kW	6.0	8.6
			Tbiv	°C	-10	
	Cold climate water outlet 35°C	General	Annual energy consumption	kWh	2,884	3,938
			ηs (Seasonal space heating efficiency)	%	197	205
			Prated at -22°C	kW	6.2	8.5
			SCOP		5.13 (1)	5.32 (1)
		A Condition (-7°CDB/-8°CWB)	COPd		5.34	5.45
			Pdh	kW	3.6	5.0
		B Condition (2°CDB/1°CWB)	Cdh (Degradation heating)		1.0	
			COPd		5.18	5.49
			Pdh	kW	2.2	3.1
		C Condition (7°CDB/6°CWB)	Cdh (Degradation heating)		0.9	
			COPd		5.46	5.74
			Pdh	kW	1.5	2.1
		D Condition (12°CDB/11°CWB)	Cdh (Degradation heating)		0.9	
			COPd		4.73	4.64
			Pdh	kW	1.2	
		Tol (temperature operating limit)	COPd		4.67	4.29
			Pdh	kW	6.0	8.6
			TOL	°C	-22	
		Tbiv (bivalent temperature)	COPd		4.84	4.29
			Pdh	kW	5.9	8.6
			Tbiv	°C	-22	
	Warm climate water outlet 35°C	General	Annual energy consumption	kWh	1,683	2,244
			ηs (Seasonal space heating efficiency)	%	183	194
			Prated at 2°C	kW	6.2	8.5
			SCOP		4.76 (1)	5.06 (1)
		B Condition (2°CDB/1°CWB)	Cdh (Degradation heating)		1.0	
			COPd		4.67	4.29
			Pdh	kW	6.0	8.6
		C Condition (7°CDB/6°CWB)	Cdh (Degradation heating)		1.0	
			COPd		5.13	5.23
Space heating	Warm climate water outlet 35°C	C Condition (7°CDB/6°CWB)	Pdh	kW	3.9	5.7
		D Condition (12°CDB/11°CWB)	Cdh (Degradation heating)		0.9	1.0
			COPd		5.32	5.48
			Pdh	kW	1.8	2.5
		Tbiv (bivalent temperature)	COPd		4.67	4.29
			Pdh	kW	6.0	8.6
			Tbiv	°C	2	
Space cooling	Low temperature application	General	Pdesign	kW	8	
			SEER		14	
	Medium temperature	General	Pdesign	kW	8	
			SEER		15	
Tank	Standing heat loss	S		W	56	

Electrical specifications				EGSAH06UD9W	EGSAH10UD9W
Power supply	Phase			1~/3~	
	Frequency		Hz	50	
	Voltage		V	230/400	
	Voltage range	Min.	%	10	
		Max.	%	10	

2 Specifications
1 - 2 EGSAX-UD9W

Electrical specifications				EGSAH06UD9W	EGSAH10UD9W
Electrical power consumption	Standby		W	15	
Current	Recommended fuses		A	16/32	
Electric heater	Type			9W	

(1)According to EN14825 and EN14511:2018 |
See operation range drawing: range increase by support booster heater or backup heater

Technical specifications					EGSAX06UD9W	EGSAX10UD9W
Heating capacity	Min.			kW	0.85	
	Nom.			kW	3.35	5.49
	Max.			kW	7.98	9.55
Power input	Nom.			kW	0.74	1.17
COP					4.51	4.70
Casing	Colour				White + Black	
	Material				Precoated sheet metal	-
Dimensions	Unit	Height		mm	1,891	
		Width		mm	597	
		Depth		mm	666	
	Packed unit	Height		mm	2,202	
		Width		mm	720	
		Depth		mm	775	
Weight	Unit			kg	222	
	Packed unit			kg	237	
Packing	Material				Wood / Carton / PE wrapping foil / Metal	
	Weight			kg	15	
Compressor	Type				Hermetically sealed swing compressor	
	Model				2YC40JXD#C	
PED	Category				Category II	
	Most critical part	Name			Compressor	
		Ps*DN		bar	42	
		Ps*V		Bar*l	64	
Pump	Type				Grundfos UPM3LK	
	Nr of speeds				PWM	
	Power input			W	75	
Water side Heat exchanger	Type				Plate heat exchanger	
	Quantity				1	
	Water volume			l	1.76	
	Insulation material				Elastomeric foam	
Brine pump	Type				Grundfos UPMXL Geo	
	Power input			W	180	
Brine heat exchanger	Quantity				1	
	Brine volume			l	1.94	
Tank	Energy efficiency class				B	
	Water volume			l	180	
Tank	Material				Stainless steel (EN 1.4521)	
	Maximum water temperature			°C	60.0	
	Maximum water pressure			bar	10	
	Insulation	Material			Polyurethane foam	
		Heat loss		kWh/24h	1.35	
	Corrosion protection				Pickling	
Heat exchanger	Internal coil volume			l	9.1	
3-way valve	Coefficient of flow (kV)	Space heating		m^3/h	10	
		Domestic hot water tank		m^3/h	8	
Water circuit	Piping connections diameter			mm	22	
	Safety valve			bar	3	
	Manometer				Digital	
	Drain valve / fill valve				Yes	
	Shut off valve				Yes	
	Air purge valve				Yes	
	Total water volume			l	5.1	
	Heating water system	Water volume	Min.	l	20	
Water circuit - Domestic hot water side	Piping connections	Cold water in / Hot water out	Diameter	mm	22	
		Recirculation connection		inch	G 3/4" FEMALE	
Brine circuit	Piping connections diameter			mm	28	
	Safety valve			bar	3	
Latent cooling capacity	7/12°C	Max.		kW	8	
Space heating	Cold climate water outlet 55°C	General	SCOP		4.03 (1)	4.18 (1)

2 Specifications
1 - 2 EGSAX-UD9W

Technical specifications					EGSAX06UD9W	EGSAX10UD9W
Brine circuit	Drain valve / fill valve				Yes	
	Air purge valve				No	
	Total volume			l	5.0	
Refrigerant	Type				R-32	
	GWP				675.0	
	Charge			TCO2Eq	1.15	
	Charge			kg	1.70	
	Circuits	Quantity			1	
Refrigerant oil	Type				FW68DA	
	Charged volume			l	0.7	
Operation range	Installation space	Min.		°C	5	
		Max.		°C	35	
	Brine side	Min.		°C	-10	
		Max.		°C	30	
Operation range	Heating	Water side	Min.	°C	5	
			Max.	°C	65	
	Domestic hot water	Water side	Min.	°C	25	
			Max.	°C	60	
Safety devices	Item	01			Thermal cut out	
		02			Temperature and pressure relief valve: 90-95°C	
General	Supplier/Manufacturer details	Name and address			Daikin Europe N.V. - Zandvoordestraat 300, 8400 Oostende, Belgium	
		Name or trademark			Daikin Europe N.V.	
	Product description	Air-to-water heat pump			No	
		Brine-to-water heat pump			Yes	
		Heat pump combination heater			No	
		Low-temperature heat pump			No	
		Supplementary heater integrated			Yes	
		Water-to-water heat pump			Yes	
	LW(A) Sound power level	Indoor		dB(A)	39.0	41.0
Sound condition Ecodesign and energy label					Sound power in heating mode, measured according to the EN12102 under conditions of the EN14825	
Sound power level	Range			dB(A)	From 36 to 44 (46 in boost mode), condition B0/-3 W30/35	From 36 to 47, condition B0/-3 W30/35
Tank	Name				Stainless steel domestic hot water tank 180 l	
Space heating general	Brine/water to water unit	Rated water/brine flow		m^3/h	1.3	1.7
	Other	Pck (Crankcase heater mode)		kW	0.000	
		Poff (Off mode)		kW	0.015	
		Psb (Standby mode)		kW	0.015	
		Pto (Thermostat off)		kW	0.024	
Domestic hot water heating	General	Declared load profile			L	
	Average climate	AEC (Annual electricity consumption)		kWh	877	
		ηwh (water heating efficiency)		%	117	
		Qelec (Daily electricity consumption)		kWh	4.140	
		Qfuel (Daily fuel consumption)		kWh	0.000	
		Water heating energy efficiency class			A+	
	Cold climate	AEC (Annual electricity consumption)		kWh	877	
		ηwh (water heating efficiency)		%	117	
		Qelec (Daily electricity consumption)		kWh	4.140	
		Qfuel (Daily fuel consumption)		kWh	0.000	
	Warm climate	AEC (Annual electricity consumption)		kWh	877	
		ηwh (water heating efficiency)		%	117	
		Qelec (Daily electricity consumption)		kWh	4.140	
		Qfuel (Daily fuel consumption)		kWh	0.000	

2 Specifications

1 - 2 EGSAX-UD9W

Technical specifications					EGSAX06UD9W	EGSAX10UD9W
Space heating	Average climate water outlet 55°C	General	Annual energy consumption	kWh	3,393	4,339
			ηs (Seasonal space heating efficiency)	%	143	154
			Prated at -10°C	kW	6.2	8.5
			SCOP		3.77 (1)	4.05 (1)
			Seasonal space heating eff. class		A++	A+++
		A Condition (-7°CDB/-8°CWB)	Cdh (Degradation heating)		1.0	-
			COPd		3.13	3.15
			Pdh	kW	5.5	7.5
		B Condition (2°CDB/1°CWB)	Cdh (Degradation heating)		1.0	
			COPd		3.81	4.09
			Pdh	kW	3.3	4.7
		C Condition (7°CDB/6°CWB)	Cdh (Degradation heating)		1.0	
			COPd		4.33	4.54
			Pdh	kW	2.2	3.0
		D Condition (12°CDB/11°CWB)	Cdh (Degradation heating)		1.0	0.9
			COPd		3.65	4.59
			Pdh	kW	1.0	1.4
		Tol (temperature operating limit)	COPd		2.90	2.85
			Pdh	kW	6.4	8.5
			TOL	°C	-10	
		Tbiv (bivalent temperature)	COPd		2.90	2.85
			Pdh	kW	6.4	8.5
			Tbiv	°C	-10	
	Cold climate water outlet 55°C	General	Annual energy consumption	kWh	3,787	5,015
			ηs (Seasonal space heating efficiency)	%	153	159
			Prated at -22°C	kW	6.2	8.5
	Cold climate water outlet 35°C	General	SCOP		5.19 (1)	5.36 (1)
	Cold climate water outlet 55°C	A Condition (-7°CDB/-8°CWB)	Cdh (Degradation heating)		1.0	-
			COPd		3.84	3.92
			Pdh	kW	3.8	5.4
		B Condition (2°CDB/1°CWB)	Cdh (Degradation heating)		1.0	
			COPd		4.32	4.58
			Pdh	kW	2.3	3.3
		C Condition (7°CDB/6°CWB)	Cdh (Degradation heating)		0.9	1.0
			COPd		4.60	4.73
			Pdh	kW	1.6	2.1
		D Condition (12°CDB/11°CWB)	COPd		3.99	3.82

2 Specifications
1 - 2 EGSAX-UD9W

Technical specifications					EGSAX06UD9W	EGSAX10UD9W
Space heating	Cold climate water outlet 55°C	D Condition (12°CDB/11°CWB)	Pdh	kW	1.0	
		Tol (temperature operating limit)	COPd		2.90	2.85
			Pdh	kW	6.4	8.5
			TOL	°C	-22	
		Tbiv (bivalent temperature)	COPd		2.90	2.85
			Pdh	kW	6.4	8.5
			Tbiv	°C	-22	
	Warm climate water outlet 55°C	General	Annual energy consumption	kWh	2,124	2,771
			ηs (Seasonal space heating efficiency)	%	148	156
			Prated at 2°C	kW	6.2	8.5
			SCOP		3.90 (1)	4.10 (1)
		B Condition (2°CDB/1°CWB)	Cdh (Degradation heating)		1.0	
			COPd		2.90	2.85
			Pdh	kW	6.4	8.5
		C Condition (7°CDB/6°CWB)	Cdh (Degradation heating)		1.0	-
			COPd		3.58	3.72
			Pdh	kW	4.1	5.4
		D Condition (12°CDB/11°CWB)	Cdh (Degradation heating)		1.0	
			COPd		4.47	4.76
			Pdh	kW	1.9	2.5
		Tbiv (bivalent temperature)	COPd		2.90	2.85
			Pdh	kW	6.4	8.5
			Tbiv	°C	2	
	Average climate water outlet 35°C	General	Annual energy consumption	kWh	2,393	3,373
			ηs (Seasonal space heating efficiency)	%	199	200
			Prated at -10°C	kW	6.2	8.5
			SCOP		5.18 (1)	5.20 (1)
			Seasonal space heating eff. class		A+++	
		A Condition (-7°CDB/-8°CWB)	COPd		4.84	4.51
			Pdh	kW	5.6	7.7
		B Condition (2°CDB/1°CWB)	Cdh (Degradation heating)		1.0	
			COPd		5.36	5.43
			Pdh	kW	3.4	4.6
		C Condition (7°CDB/6°CWB)	Cdh (Degradation heating)		1.0	
			COPd		5.42	5.38
			Pdh	kW	2.1	2.9
		D Condition (12°CDB/11°CWB)	Cdh (Degradation heating)		0.9	

2 Specifications

1 - 2 EGSAX-UD9W

Technical specifications					EGSAX06UD9W	EGSAX10UD9W
Space heating	Average climate water outlet 35°C	D Condition (12°CDB/11°CWB)	COPd		4.57	5.10
			Pdh	kW	1.1	1.4
		Tol (temperature operating limit)	COPd		4.67	4.29
			Pdh	kW	6.0	8.6
			TOL	°C	-10	
		Tbiv (bivalent temperature)	COPd		4.67	4.29
			Pdh	kW	6.0	8.6
			Tbiv	°C	-10	
	Cold climate water outlet 35°C	General	Annual energy consumption	kWh	2,851	3,905
			ηs (Seasonal space heating efficiency)	%	199	207
			Prated at -22°C	kW	6.2	8.5
			SCOP		5.19 (1)	5.36 (1)
		A Condition (-7°CDB/-8°CWB)	COPd		5.34	5.45
			Pdh	kW	3.6	5.0
		B Condition (2°CDB/1°CWB)	Cdh (Degradation heating)		1.0	
			COPd		5.18	5.49
			Pdh	kW	2.2	3.1
		C Condition (7°CDB/6°CWB)	Cdh (Degradation heating)		0.9	
			COPd		5.46	5.74
			Pdh	kW	1.5	2.1
		D Condition (12°CDB/11°CWB)	Cdh (Degradation heating)		0.9	
			COPd		4.73	4.64
			Pdh	kW	1.2	
		Tol (temperature operating limit)	COPd		4.67	4.29
			Pdh	kW	6.0	8.6
			TOL	°C	-22	
		Tbiv (bivalent tempera-	COPd		4.67	4.29
			Pdh	kW	6.0	8.6
			Tbiv	°C	-22	
	Warm climate water outlet 35°C	General	Annual energy consumption	kWh	1,564	2,179
			ηs (Seasonal space heating efficiency)	%	197	200
			Prated at 2°C	kW	6.2	8.5
			SCOP		5.12 (1)	5.21 (1)
		B Condition (2°CDB/1°CWB)	Cdh (Degradation heating)		1.0	
			COPd		4.67	4.29
			Pdh	kW	6.0	8.6
		C Condition (7°CDB/6°CWB)	Cdh (Degradation heating)		1.0	
Space heating	Warm climate water outlet 35°C	C Condition (7°CDB/6°CWB)	COPd		5.13	5.23
			Pdh	kW	3.9	5.7
		D Condition (12°CDB/11°CWB)	Cdh (Degradation heating)		0.9	1.0
			COPd		5.32	5.48
			Pdh	kW	1.8	2.5
		Tbiv (bivalent tempera-	COPd		4.67	4.29
			Pdh	kW	6.0	8.6
			Tbiv	°C	2	
Space cooling	Low temperature application	General	Pdesign	kW	8	
			SEER		14	
	Medium temperature	General	Pdesign	kW	8	
			SEER		15	
Tank	Standing heat loss	S		W	56	

Electrical specifications				EGSAX06UD9W	EGSAX10UD9W
Power supply	Phase			1~/3~	
	Frequency		Hz	50	
	Voltage		V	230/400	
	Voltage range	Min.	%	10	
		Max.	%	10	
Electrical power consumption	Standby		W	15	

2 Specifications
1 - 2 EGSAX-UD9W

Electrical specifications			EGSAX06UD9W	EGSAX10UD9W
Current	Recommended fuses	A	16/32	
Electric heater	Type		9W	

(1)According to EN14825 and EN14511:2018 |
See operation range drawing: range increase by support booster heater or backup heater

3 Options
3 - 1 Options

EGSAH-UD9W
EGSAX-UD9W

Factory-mounted equipment for ·EGSA(H/X)06DA##·

Description		EGSA(H/X)06DA##
Heating only model ·EGSAH*·		9W
Reversible model ·EGSAX*·		9W
Backup heater ·3kW 1N~230V·	(7) (8)	o
Backup heater ·6kW 3N~400V·	(7) (9)	o
Domestic hot water tank ·180L·		o

Factory-mounted equipment for ·EGSA(H/X)10DA##·

Description		EGSA(H/X)10DA##
Heating only model ·EGSAH*·		9W
Reversible model ·EGSAX*·		9W
Backup heater ·3kW 1N~230V·	(7) (8)	o
Backup heater ·6kW 3N~400V·	(7) (9)	o
Domestic hot water tank ·180L·		o

Kit availability

Reference	Description		EGSA*DA*			
EGSAH*	Heating only indoor unit		9W		9W	
EGSAX*	Reversible indoor unit			9W		9W
EKRP1HBAA	Digital I/O PCB	(1) (2)	o	o	o	o
EKRP1AHTA	Demand PCB	(3)	o	o	o	o
BRC1HHDA*	Remote user interface		o	o	o	o
EKCC8-W	Universal centralised user interface		o	o	o	o
KRCS01-1	Remote indoor sensor		o	o	o	o
EKPCCAB4	PC cable kit	(4)	o	o	o	o
FWXV15AVEB	Heat pump convector		o	o (5)	o	o (5)
FWXV20AVEB	Heat pump convector		o	o (5)	o	o (5)
EKRTWA	Wired room thermostat		o	o	o	o
EKRTR1	Wireless room thermostat		o	o	o	o
EKRTETS	External room thermostat	(6)	o	o	o	o
KGSFILL2	Fill kit		o	o	o	o
K.FERNOXTF1	Magnetic filter / dirt separator		o	o	o	o
K.FERNOXTF1FL	Magnetic filter / dirt separator		o	o	o	o
EKCSENS	Current sensor		o	o	o	o
EKGSHYDMOD	Hydro module		o	o	o	o
EKGSPOWCAB	Power cable with connector for Germany		o	o	o	o

(1) PCB that provides additional output connections: · ·
- (a) Control external heat source (bivalent operation).
- (b) Output remote ON/OFF signal space heating/cooling
- (c) Remote alarm output

(2) Additional relays to allow bivalent control in combination with an external room thermostat are field-supplied.
(3) PCB to receive up to ·4· digital inputs for power limitation
(4) Data cable for connection with PC.
(5) The valve kit is mandatory if a heat pump convector is installed on a reversible model (not mandatory for heating only models).
(6) ·EKRTETS· can only be used in combination with ·EKRTR1·
(7) Backup heater capacity depends on how the backup heater is connected to the grid.
(8) ·1·-phase ·3·kW (normal operation) / ·6·kW (emergency operation/ "HP forced off" mode)
(9) ·3·-phase ·6·kW (normal operation) / ·9·kW (emergency operation/ "HP forced off" mode)

3D122775

4 Capacity tables

4 - 1 Capacity Table Legend

EGSAH-UD9W / EGSAX-UD9W

Model			EGSAH06DA9W	EGSAH10DA9W
Domestic hot water heating mode	Load profile	-	L	
According to EN16147.	Ηwh (Water heating energy efficiency)	[%]	117	
	Domestic hot water COP	-	2,82	
	Heat-up time	hh:mm	1:43	
	Standby power input	W	26,2	
	Reference hot water temperature	[°C]	53,0	
	Equivalent domestic hot water volume	[l]	238,7	

Model			EGSAH06DA9W		EGSAH10DA9W	
Application			35	55	35	55
Sound power	Measured according to ·EN12102·	[dBa]	39,0	39,0	41,0	41,0

Rated data for certification programmes - heating mode	Heating capacity	[kW]	3,4	3,3	5,5	5,6
·· according to ·EN14511:2018·	Power input	[kW]	0,7	1,3	1,2	2,0
Entering brine temperature = ·0·°C	COP	-	4,5	2,5	4,7	2,9
	Nominal water flow rate	m^3/h				

Seasonal data - heating						
Average climate (design temperature: ·-10·°C)						
Space heating	Prated at ·-10·°C	[kW]	6,0	6,2	8,5	8,5
	Ηs (Seasonal space heating efficiency)	[%]	195	141	197	152
	Annual energy consumption	kWh	2447	3447	3428	4393
Colder climate (design temperature: ·-22·°C)						
Space heating	Prated at ·-22·°C	[kW]	6,0	6,2	8,5	8,5
	Ηs (Seasonal space heating efficiency)	[%]	197	152	205	158
	Annual energy consumption	kWh	2884	3820	3938	5047
Warmer climate (design temperature: ·2·°C)						
Space heating	Prated at ·2·°C	[kW]	6,0	6,2	8,5	8,5
	Ηs (Seasonal space heating efficiency)	[%]	183	143	194	152
	Annual energy consumption	kWh	1683	2189	2244	2837
Space heating - general						
Other	Capacity control method	-	Inverter			
	P_{off} (Off mode)	[kW]	0,015			
	P_{to} (Thermostat off)	[kW]	0,024			
	P_{sb} (Standby mode)	[kW]	0,015			
	Pck (Crankcase heater mode)	[kW]	0,000			

			Average climate (design temperature: ·-10·°C)				Colder climate (design temperature: ·-22·°C)			
Model			EGSAH06DA9W		EGSAH10DA9W		EGSAH06DA9W		EGSAH10DA9W	
Application			35	55	35	55	35	55	35	55
·(A)· condition (·-7·°C DB / ·-8·°C WB)	Pdh (Declared heating capacity)	[kW]	5,57	5,46	7,67	7,45	3,57	3,75	4,97	5,43
	COPd (Declared COP)	-	4,84	3,13	4,51	3,15	5,34	3,84	5,45	3,92
	Cdh (Degradation heating)	-	0,98	1	1	1	1	1	1	0,98
·(B)· condition (·2·°C DB / ·1·°C WB)	Pdh (Declared heating capacity)	[kW]	3,35	3,25	4,59	4,68	2,17	2,28	3,05	3,32
	COPd (Declared COP)	-	5,36	3,81	5,43	4,09	5,18	4,32	5,49	4,58
	Cdh (Degradation heating)	-	0,96	1	1	1	1	1	1	0,97
·(C)· condition (·7·°C DB / ·6·°C WB)	Pdh (Declared heating capacity)	[kW]	2,05	2,24	2,93	2,98	1,5	1,63	2,11	2,07
	COPd (Declared COP)	-	5,42	4,33	5,38	4,54	5,46	4,6	5,74	4,73
	Cdh (Degradation heating)	-	1	0,95	1	1	0,91	0,93	0,94	1
·(D)· condition (·12·°C DB / ·11·°C WB)	Pdh (Declared heating capacity)	[kW]	1,05	0,96	1,36	1,37	1,15	1,01	1,19	0,98
	COPd (Declared COP)	-	4,57	3,65	5,1	4,59	4,73	3,99	4,64	3,82
	Cdh (Degradation heating)	-	0,9	1	0,91	0,92	0,9	0,91	0,91	0,91
·(E)· condition (Tol (temperature operating limit))	Tol (Temperature operating limit)	[°C]	-10	-10	-10	-10	-22	-22	-22	-22
	Pdh (Declared heating capacity)	[kW]	5,95	6,44	8,55	8,49	5,95	6,44	8,55	8,49
	COPd (Declared COP)	-	4,67	2,9	4,29	2,85	4,67	2,9	4,29	2,89
	Wtol (Heating water operation limit)	[°C]	35	55	35	55	35	55	35	55
·(F)· condition (Tbiv (bivalent temperature))	Tbiv (Bivalent temperature)	[°C]	-10	-10	-10	-10	-22	-22	-22	-22
	Pdh (Declared heating capacity)	[kW]	5,95	6,44	8,55	8,49	5,95	6,44	8,55	8,49
	COPd (Declared COP)	-	4,67	2,9	4,29	2,85	4,67	2,9	4,29	2,89
Psup BUH (Capacity of integrated backup heater)		[kW]	9,0	9,0	9,0	9,0	9,0	9,0	9,0	9,0
Psup (Supplementary capacity at design temperature)		[kW]	0,0	0,0	0,0	0,0	0,0	0,0	0,0	0,0

Remark
·P_{dh} (Declared Heating Capacity)· according to ·EN14511:2018·
·COP_{dh} (Declared COP)· according to ·EN14511:2018·

3D122777

4 Capacity tables

4 - 2 Cooling Capacity Tables

EGSAH-UD9W
EGSAX-UD9W

Maximum cooling capacity

	LWC [°C]	7		13		15		18		22	
	EBT [°C]	CC [kW]	PI [kW]	CC [kW]	PI [kW]	CC [kW]	PI [kW]	CC [kW]	PI [kW]	CC [kW]	PI [kW]
EGSAH(X)10DA9W(G)	-5			8,12	0,57	8,12	0,57	8,12	0,57	8,12	0,57
	0			11,27	1,28	11,27	1,27	11,28	1,25	11,29	1,24
	5	11,76	1,43	11,94	1,50	12,00	1,50	12,10	1,50	12,24	1,49
	10	11,85	1,61	12,61	1,65	12,73	1,65	12,92	1,66	13,18	1,66
	15	11,17	1,68	12,10	1,73	12,35	1,72	12,74	1,71	13,25	1,69
	20	10,49	1,76	11,59	1,81	11,97	1,79	12,56	1,76	13,33	1,72
	25	9,82	1,84	11,08	1,89	11,59	1,86	12,37	1,81	13,41	1,74
	30	9,14	1,92	10,57	1,98	11,21	1,93	12,19	1,86	13,49	1,77
EGSAH(X)06DA9W(G)	-5			8,12	0,57	8,12	0,57	8,12	0,57	8,12	0,57
	0			9,73	1,00	9,73	1,00	9,73	0,99	9,73	0,97
	5	10,04	1,11	10,31	1,16	10,40	1,15	10,52	1,14	10,68	1,12
	10	10,13	1,22	10,90	1,25	11,06	1,24	11,30	1,23	11,62	1,22
	15	9,80	1,38	10,74	1,42	11,04	1,40	11,49	1,38	12,09	1,36
	20	9,46	1,55	10,57	1,59	11,01	1,57	11,67	1,54	12,56	1,49
	25	9,13	1,71	10,41	1,76	10,99	1,73	11,86	1,69	13,02	1,63
	30	8,79	1,87	10,24	1,93	10,96	1,90	12,04	1,84	13,49	1,77

Legend

LWC: Leaving water temperature [°C]
EBT: Entering brine temperature [°C]
CC: Cooling capacity at maximum operating frequency, measured according to ·EN14511:2018·.

PI: Power input at maximum operating frequency (including the controller and the pumps), measured according to ·EN14511:2018·.

Conditions

Cooling capacity

The capacity is according to ·EN14511:2018· and valid for chilled water range Dt = ·3~8·°C
Capacity values may not be extrapolated below 7°C leaving water temperature.

3D124144

4 Capacity tables

4 - 3 Heating Capacity Tables

EGSAH-UD9W
EGSAX-UD9W

Maximum heating capacity

	LWC [°C]	25		35		45		55		60	
	EBT [°C]	HC [kW]	PI [kW]	HC [kW]	PI [kW]	HC [kW]	PI [kW]	HC [kW]	PI [kW]	HC [kW]	PI [kW]
EGSAH(X)10DA9W(G)	-10	7,36	1,64	7,04	1,91	6,51	2,35	5,98	2,79	5,06	2,75
	-5	8,51	1,59	8,15	2,05	7,70	2,47	7,24	2,89	5,87	2,72
	0	9,65	1,55	9,55	2,20	8,88	2,59	8,49	2,98	6,68	2,70
	5	11,29	1,63	10,83	2,18	10,07	2,52	9,31	2,86	7,70	2,72
	10	12,93	1,72	12,40	2,16	11,26	2,45	10,12	2,74	8,72	2,75
	15	14,19	1,63	13,98	2,14	12,43	2,34	10,89	2,55	9,52	2,58
	20	15,46	1,55	15,56	2,12	13,61	2,24	11,66	2,37	10,31	2,41
	25	16,72	1,47	17,14	2,10	14,78	2,14	12,43	2,18	11,11	2,25
	30	17,98	1,38	18,71	2,08	15,96	2,04	13,20	2,00	11,90	2,08
EGSAH(X)06DA9W(G)	-10	6,08	1,42	5,84	1,64	5,36	1,99	4,88	2,34	4,41	2,50
	-5	7,14	1,37	6,86	1,72	6,45	2,08	5,99	2,44	5,54	2,60
	0	8,20	1,33	7,98	1,79	7,54	2,16	7,10	2,54	6,68	2,70
	5	9,60	1,40	9,30	1,83	8,81	2,21	8,33	2,60	7,70	2,72
	10	11,00	1,48	10,62	1,86	10,09	2,26	9,55	2,66	8,72	2,75
	15	12,13	1,40	12,05	1,84	11,26	2,17	10,46	2,49	9,52	2,58
	20	13,26	1,31	13,49	1,82	12,43	2,07	11,38	2,33	10,31	2,41
	25	14,39	1,22	14,92	1,79	13,61	1,98	12,29	2,16	11,11	2,25
	30	15,53	1,14	16,36	1,77	14,78	1,88	13,20	2,00	11,90	2,08

Legend

LWC: Leaving water temperature [°C]
EBT: Entering brine temperature [°C]
HC: Heating capacity at maximum operating frequency, measured according to ·EN14511:2018·.
PI: Power input at maximum operating frequency (including the controller and the pumps), measured according to ·EN14511:2018·.

Conditions

Heating capacity

The capacity is according to ·EN14511:2018· and valid for heated water range ΔT = ·3~8·°C

3D123293

4 Capacity tables
4 - 4 Certification Programs

EGSAH-UD9W / EGSAX-UD9W

Rated data for certification programmes - heating mode

EGSA(H/X)-06							
			Low temperature				
Space heating - Average climate - Part load			Entering brine temperature [°C]	Leaving water temperature [°C]	Heating capacity [kW]	COP	Cdh (Degradation heating)
A	-7		20	35	5,1	10,29	0,96
B	2		20	35	3,06	10,01	0,94
C	7		20	35	1,85	9,3	0,9
D	12		20	35	1,85	9,3	0,9
E	-10	Tol (Temperature operating limit)	20	35	5,66	9,67	0,97
F	-10	Tbiv (Bivalent temperature)	20	35	5,66	9,67	0,97

EGSA(H/X)-10							
			Low temperature				
Space heating - Average climate - Part load			Entering brine temperature [°C]	Leaving water temperature [°C]	Heating capacity [kW]	COP	Cdh (Degradation heating)
A	-7		20	35	9,66	9,04	0,98
B	2		20	35	5,27	9,59	0,96
C	7		20	35	3,49	8,94	0,95
D	12		20	35	1,65	6,42	0,93
E	-10	Tol (Temperature operating limit)	20	35	10,53	8,95	0,98
F	-10	Tbiv (Bivalent temperature)	20	35	10,53	8,95	0,98

EGSA(H/X)-06							
			Medium temperature				
Space heating - Average climate - Part load			Entering brine temperature [°C]	Leaving water temperature [°C]	Heating capacity [kW]	COP	Cdh (Degradation heating)
A	-7		20	55	5,75	4,75	0,98
B	2		20	55	3,71	3,94	0,98
C	7		20	55	2,08	3,11	0,97
D	12		20	55	1,52	2,7	0,97
E	-10	Tol (Temperature operating limit)	20	55	6,51	4,81	0,99
F	-10	Tbiv (Bivalent temperature)	20	55	6,51	4,81	0,99

EGSA(H/X)-10							
			Medium temperature				
Space heating - Average climate - Part load			Entering brine temperature [°C]	Leaving water temperature [°C]	Heating capacity [kW]	COP	Cdh (Degradation heating)
A	-7		20	55	8,77	4,94	0,99
B	2		20	55	5,83	4,65	0,98
C	7		20	55	3,83	4,29	0,98
D	12		20	55	2,06	3,47	0,97
E	-10	Tol (Temperature operating limit)	20	55	10,19	4,96	0,99
F	-10	Tbiv (Bivalent temperature)	20	55	10,19	4,96	0,99

3D130996

4 Capacity tables
4 - 4 Certification Programs

EGSAH-UD9W / EGSAX-UD9W

EGSA(H/X)-06									
Heating capacity									
Minimum					Maximum				
Flow rate Brine circuit [l/min]	Entering brine temperature [°C]	Leaving water temperature [°C]	Heating capacity [kW]	COP	Flow rate Brine circuit [l/min]	Entering brine temperature [°C]	Leaving water temperature [°C]	Heating capacity [kW]	COP
9	20	35	1,50	9,48	9	20	25	10,62	7,57
9	25	35	2,01	16,19	9	20	35	10,52	5,91
9	20	45	1,31	5,05	9	20	45	10,28	4,68
9	25	45	1,49	6,51	9	20	55	9,23	3,99
9	20	55	1,88	2,87	9	25	25	11,79	8,71
9	25	55	1,60	3,17	9	25	35	11,62	6,57
					9	25	45	11,38	5,16
					9	25	55	9,23	4,54

Domestic hot water operation

EGSA(H/X)-06 , -10					
Flow rate Brine circuit [l/min]	Entering brine temperature [°C]	Domestic hot water tank temperature	Heat-up time (hh:mm:ss)	Capacity Brine side Maximum [kW]	Capacity Brine side Average [kW]
9	20	10 -> 55	01:16:56	7,7	5,94
9	25	10 -> 55	01:10:04	8,5	6,53
9	20	37 -> 55	00:43:58	4,6	3,67
9	25	37 -> 55	00:38:59	5,3	4,39

Installation Restrictions

Safety Valve
The safety valve which is delivered with the unit opens at 3 bar. If design pressure is higher, then this should not be used. Maximum allowed design pressure on brine side is 4 bar. The safety valve selected must open at maximum 4 bar pressure.

Balancing Valve/ Regulating Valve
A balancing valve must be installled on the inlet or outlet brine pipe to limit maximum flow. Without such a valve, brine pump cannot operate correctly and operation of unit cannot be guaranteed. The recommended value for maximum flow rate is 9 l/min.

Hydraulic Separator
A Hydraulic Separator must be installed to separate primary flow circuit (chiller) from secondary flow circuit (EGSA unit)

Expansion Vessel
The brine level vessel delivered with the unit is only meant for single application, not collecive application. An expansion vessel must be installed to avoid issues with pump cavitation and to compensate for change in volume of medium as a result of temperature fluctuation.

Freeze Temperature Setting
If water is used as medium, field setting A-04 must be changed to value 0 to avoid break-down.

Check Valve
A check valve must be installed on brine outlet pipe.

Pipe Sizing

Pressure Drop Restirctions
When the units are installed in a parallel circuit, the maximum allowed pressure drop for the brine pump which is furthest away from the balancing bottle is 7 kPa. (illustrated below)

This pressure drop is calculated at a flow 8 l/min less than the design flow of the common pipe.

For example, if number of units = N and design flow for each apartment = 9 l/min , then 7 kPa is maximum pressure drop at a flow of (9N-8) l/min

If pressure drop is higher, then stable operation cannot be guaranteed.

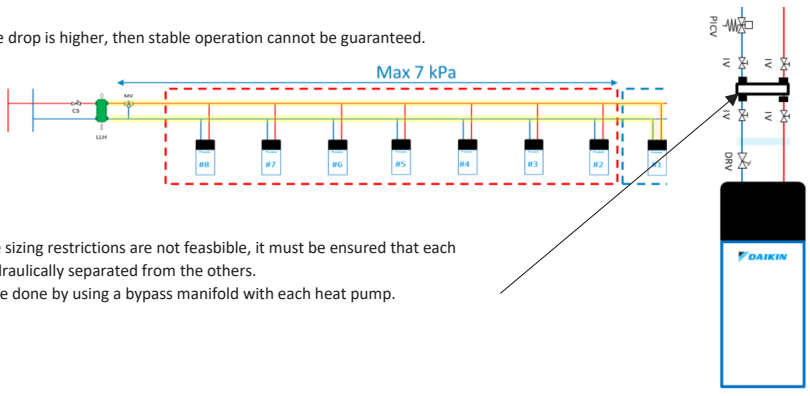

If the pipe sizing restrictions are not feasbible, it must be ensured that each unit is hydraulically separated from the others.
This can be done by using a bypass manifold with each heat pump.

3D130996

5 Dimensional drawings

5 - 1 Dimensional Drawings

5

EGSAH-UD9W / EGSAX-UD9W

(2) Plate heat exchanger Brine side
(3) Plate heat exchanger Water side
(4) High pressure switch
(5) Refrigerant pressure sensor
(6) Low pressure sensor
(7) Compressor
(8) Drain valve
(9) Service port 5/16" flare
(10) Pump Water side
(11) Pump Brine side
(12) Electronic expansion valve
(13) 4-way valve

The typical field installation has to be done according to the applicable legislation.

For examples, refer to the installer reference guide.

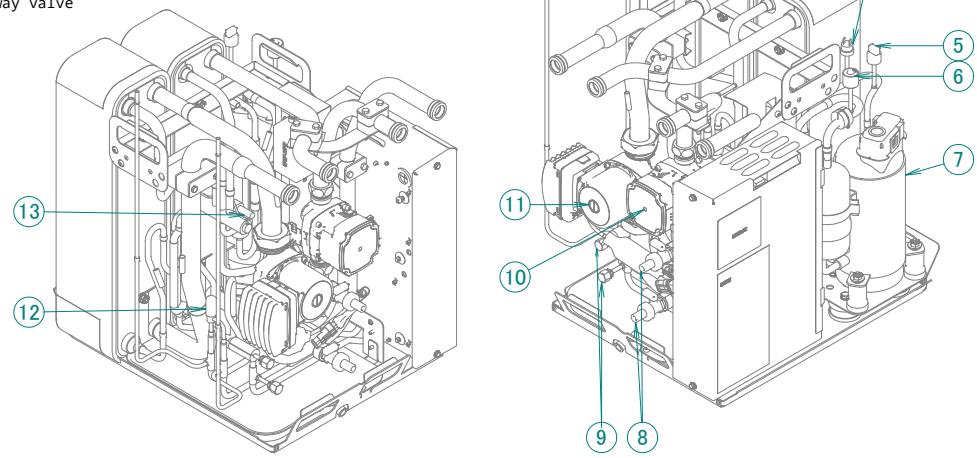

3D122355B

EGSAH-UD9W
EGSAX-UD9W

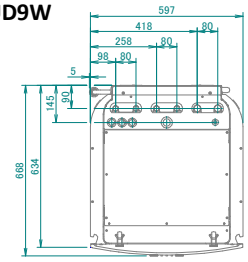

Screws used in this unit:

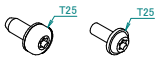

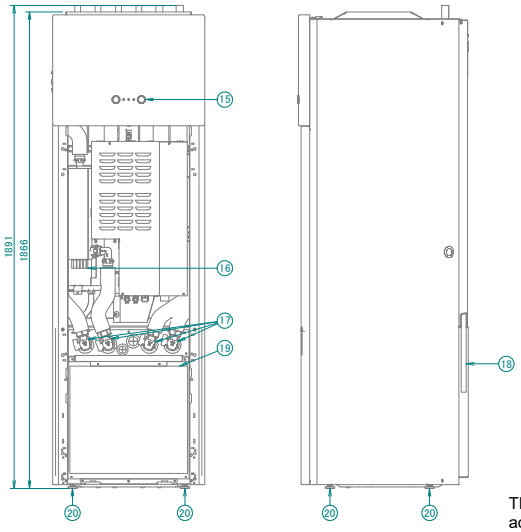

(1) Water out connection ·Ø22mm· straight
(2) Water in connection ·Ø22mm· straight
(3) Tank out connection ·Ø22mm· straight
(4) Tank in connection ·Ø22mm· straight
(5) Brine out connection ·Ø28mm· straight
(6) Brine in connection ·Ø28mm· straight
(7) Low voltage wiring intake ·Ø13.5mm·
(8) Recirculation connection ·G3/4"· (female)
(9) Safety valve
(10) Flow sensor
(11) Space heating water pressure sensor
(12) Air purge
(13) 3-way valve
(14) High voltage wiring intake ·Ø24mm·
(15) User interface
(16) Backup heater
(17) Shut-off valves
(18) Drain outlet (unit + safety valve)
(19) Hydrobox unit
(20) Levelling feet
(21) Tundish ·Ø22·mm
(22) Pressure and temperature relief valve

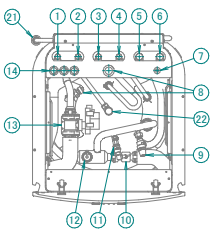

The typical field installation has to be done according to the applicable legislation.

For examples, refer to the installer reference guide.

3D125999

6 Centre of gravity

6 - 1 Centre of Gravity

EGSAH-UD9W
EGSAX-UD9W

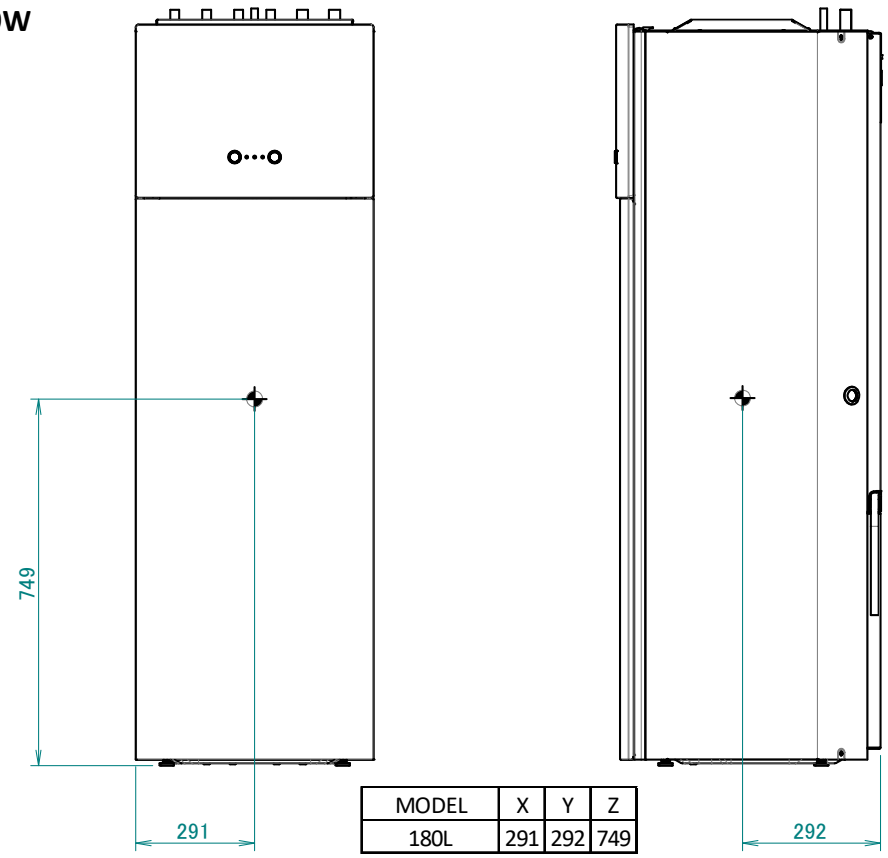

MODEL	X	Y	Z
180L	291	292	749

3D122238

7 Piping diagrams

7 - 1 Piping Diagrams

EGSAH-UD9W / EGSAX-UD9W

① Water out connection ø 22mm
② Water in connection ø 22mm
③ Tank out connection ø 22mm
④ Tank in connection ø 22mm
⑤ Shut-off valve
⑥ Safety valve
⑦ Automatic air purge valve
⑧ Drain valve
⑨ Pump
⑩ Plate heat exchanger
⑪ Flow sensor
⑫ Shut-off valve
⑬ Backup heater
⑭ 3-way valve
⑮ 4-way valve
⑯ Low pressure sensor
⑰ High pressure sensor
⑱ High pressure switch

⑲ Muffler
⑳ Compressor
㉑ Check valve
㉒ Service port
㉓ Space heating water pressure sensor
㉔ Rectifier
㉕ Heat sink
㉖ Filter
㉗ Electronic expansion valve
㉘ Brine in connection ø 28mm
㉙ Brine out connection ø 28mm

㉛ Recirculation connection 3/4" (G) (female)

㉜ R2T (A3P) - Thermistor (discharge)
㉝ R3T (A3P) - Thermistor (suction compressor)
㉞ R4T (A3P) - 2-phase sensor (Tx)
㉟ R5T (A3P) - Entering brine temperature
㊱ R6T (A3P) - Leaving brine temperature
㊲ R1T (A1P) - Outlet water heat exchanger thermistor
㊳ R2T (A1P) - Outlet water backup heater thermistor
㊴ R3T (A1P) - Refrigerant temperature sensor (liquid)
㊵ R4T (A1P) - Inlet water thermistor
㊶ R5T (A1P) - Tank thermistor
㊷ R8T (A1P) - Tank thermistor

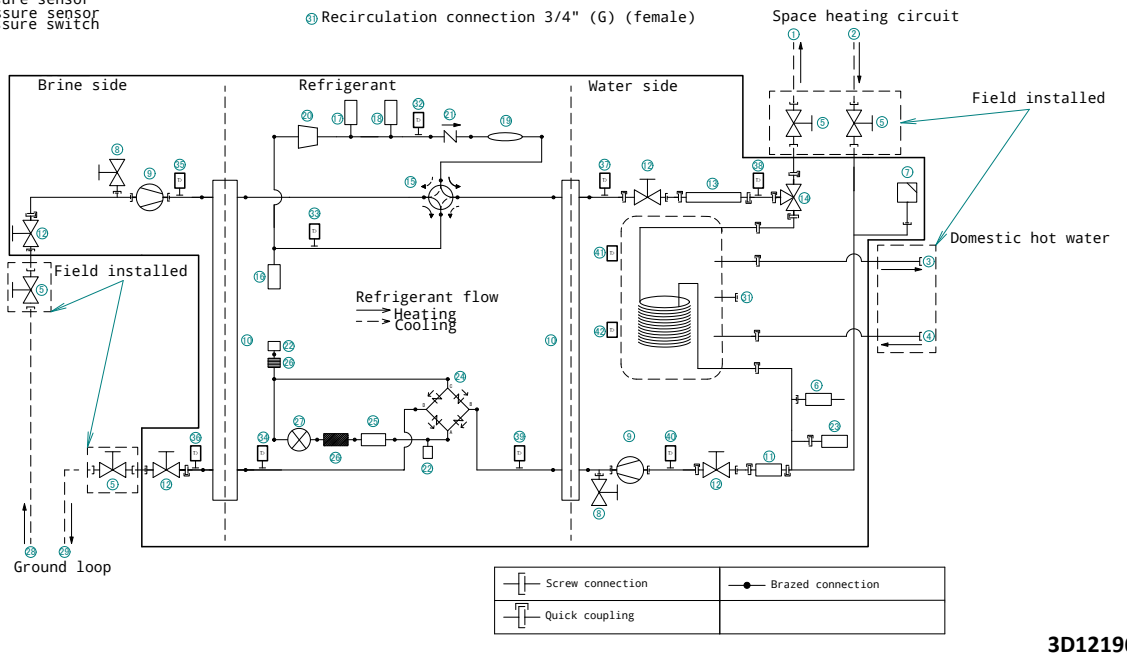

3D121963B

8 Wiring diagrams

8 - 1 Notes & Legend

EGSAH-UD9W
EGSAX-UD9W

NOTES to go through before starting the unit

X1M : Main terminal
X2M : Field wiring terminal for AC
X5M : Field wiring terminal for DC
: Earth wiring
: Field supply
15 : Wire number 15
**/12.2 : Connection ** continues on page 12 column 2
(1) : Several wiring possibilities
: Option
: Wiring depending on model
: Mounted in switch box
: PCB

Backup heater power supply:
☐ 1N~, 230 V, 3/6 kW
☐ 3N~, 400 V, 6/9 kW

User installed options:
☐ Remote user interface
☐ Ext. indoor thermistor
☐ Digital I/O PCB
☐ Demand PCB
☐ Brine low pressure switch

Main LWT:
☐ ON/OFF thermostat (wired)
☐ ON/OFF thermostat (wireless)
☐ Ext. thermistor
☐ Heat pump convector

Add LWT:
☐ ON/OFF thermostat (wired)
☐ ON/OFF thermostat (wireless)
☐ Ext. thermistor
☐ Heat pump convector

POSITION IN SWITCH BOX

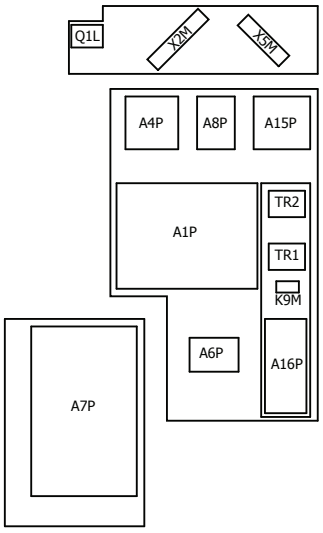

NOTES

1. Connection point of the power supply for the BUH should be foreseen outside the unit.

LEGEND

Part n°		Description
A1P		main PCB (hydro)
A2P	*	user interface PCB
A3P	*	ON/OFF thermostat
A3P	*	heat pump convector
A4P	*	digital I/O PCB
A4P	*	receiver PCB (wireless ON/OFF thermostat, PC=power circuit)
A6P		BUH control PCB
A7P		inverter PCB
A8P	*	demand PCB
A11P		MMI main PCB
A15P		LAN adapter
A16P		ACS digital I/O PCB
B1L		flow sensor
B1PR		refrigerant pressure sensor
B1PW		water pressure sensor
C2~C8		capacitor
CN* (A4P)	*	connector
CT*	*	current sensor
DS1 (A8P)	*	dipswitch
E1H		backup heater element (1 kW)
E2H		backup heater element (2 kW)
F1B	#	overcurrent fuse
F1T		thermal fuse backup heater
F1~2U (A4P)	*	fuse (5 A, 250 V)
F1U (A7P)		fuse (T, 6.3 A, 250 V)
F1U (A16P)		fuse (T, 1.5 A, 250 V)
F2B	#	overcurrent fuse compressor
FU1 (A1P)		fuse (T, 6.3 A, 250 V)
K*R (A1/4/7/16P)		relay on PCB
K1~6M (A6P)		BUH relay
K9M		thermal protector BUH relay
L1R		reactor
M1C		motor (compressor)
M1P		main water supply pump
M2P	#	domestic hot water pump
M2S	#	shut off valve
M3P	#	drain pump
M4P		brine pump
M3S		3 way valve for floorheating/domestic hot water
Q*DI	#	earth leakage circuit breaker

Part n°		Description
Q1L		thermal protector backup heater
Q1L (A7P)		thermal protector compressor
Q4L	#	safety thermostat
R1T (A1P)		outlet water heat temperature sensor (LWC)
R1T (A2P)	*	ambient sensor user interface
R1T (A3P)	*	ambient sensor ON/OFF thermostat
R1T (A7P)		thermistor (outdoor ambient)
R2T (A1P)		after BUH temperature sensor
R2T (A3P)	*	external sensor (floor or ambient)
R2T (A7P)		thermistor (discharge)
R3T (A1P)		refrigerant liquid temperature sensor
R3T (A7P)		thermistor (suction)
R4T (A1P)		inlet water temperature sensor (EWC)
R4T (A7P)		thermistor (2 phase)
R5T (A1P)		DHW tank temperature sensor
R5T (A7P)		thermistor (brine entering temperature)
R6T (A1P)		external indoor ambient thermistor
R6T (A7P)		thermistor (brine low temperature)
R8T (A1P)		DHW tank temperature sensor
R1H (A3P)	*	humidity sensor
S1L	#	low level switch
S1NPL		low pressure sensor (refrigerant)
S1PH		high pressure switch
S1PL	#	low brine pressure switch
S1S	#	preferential kWh rate PS contact
S2S	#	electrical meter pulse input 1
S3S	#	electrical meter pulse input 2
S6~9S	#	digital power limitation inputs
SS1 (A4P)	*	selector switch
TR1,TR2		power supply transformer
V1~6D (A6P)		diode
X*H*		backup heater connector
X*M		terminal strip
X*Y*		connector
Y1E		electronic expansion valve
Y1S		Solenoid valve (4-way valve)
Z*C		noise filter (ferrite core)
Z*F (A16P)		noise filter

* : optional
# : field supply

4D116863E

8 Wiring diagrams

8 - 2 Control Circuit

EGSAH-UD9W
EGSAX-UD9W

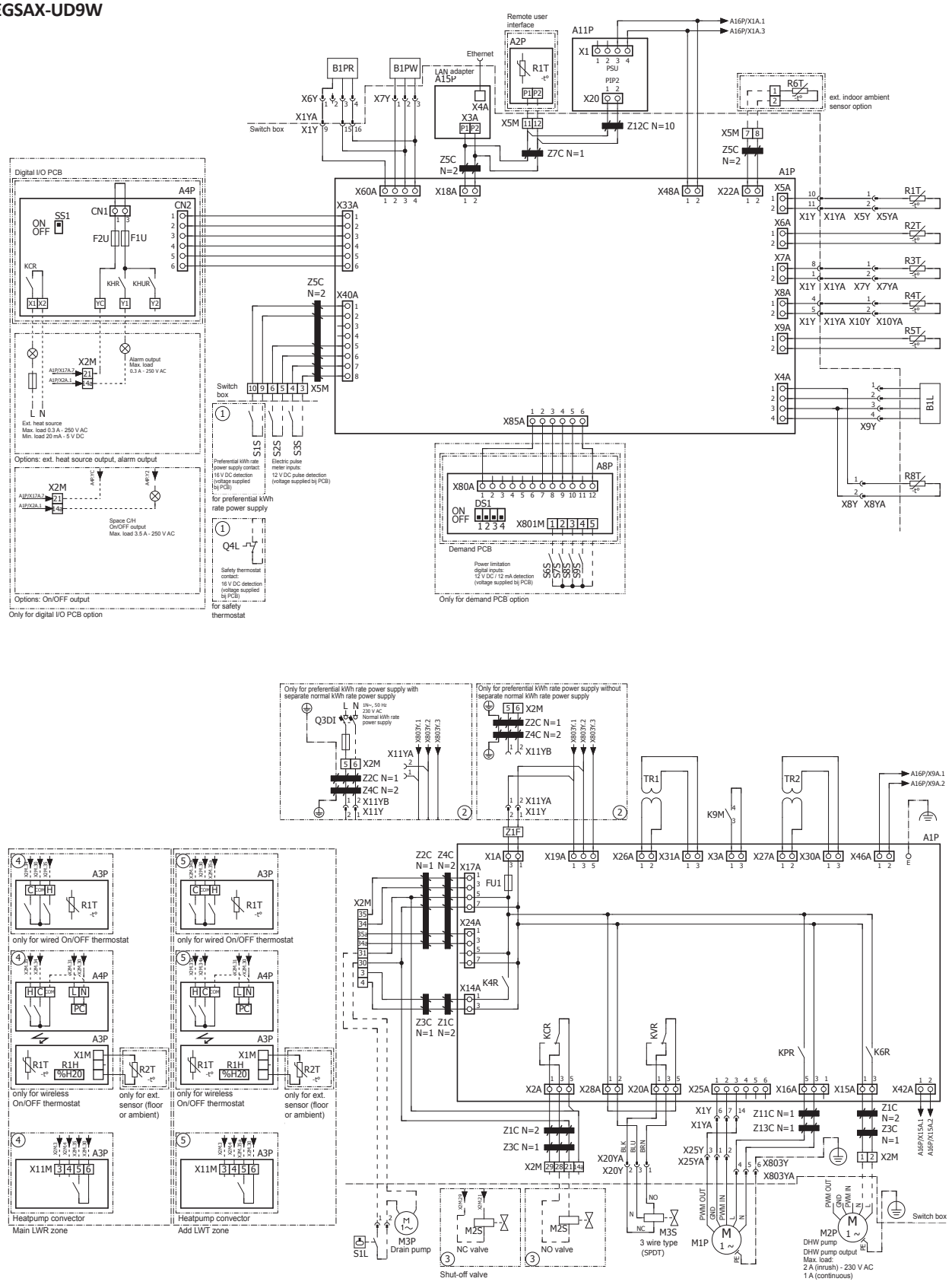

4D116863D

8 Wiring diagrams

8 - 2 Control Circuit

EGSAH-UD9W
EGSAX-UD9W

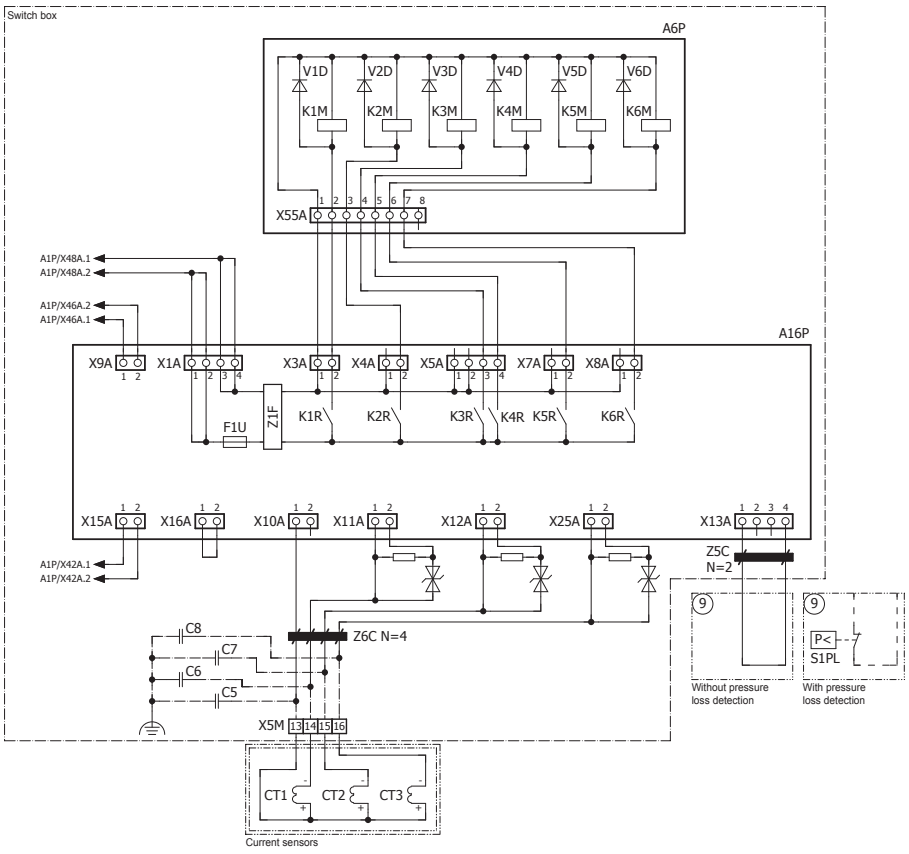

4D116863D

8 Wiring diagrams

8 - 3 Power Supply, Back-up Heater

EGSAH-UD9W
EGSAX-UD9W

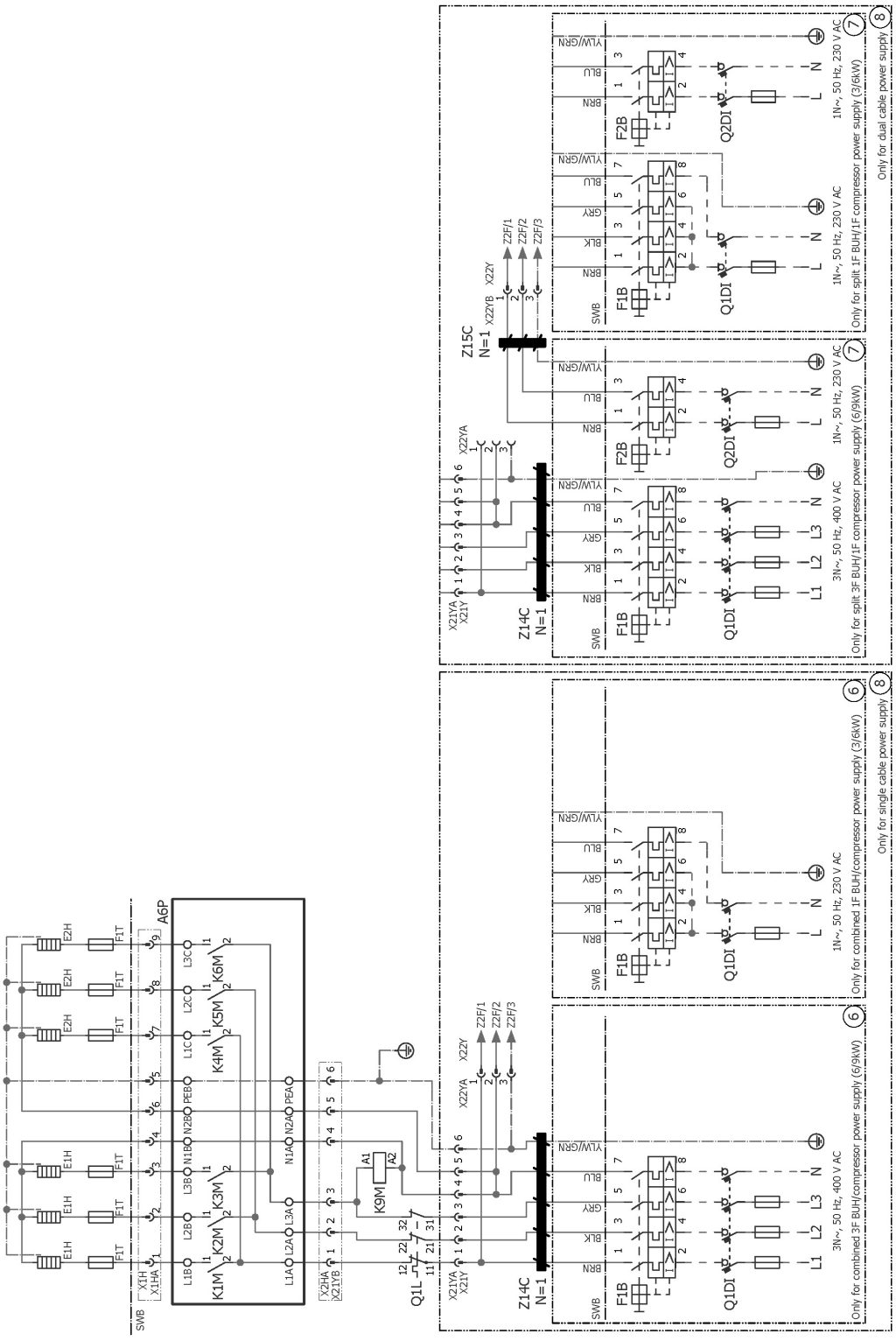

4D116863D

8 Wiring diagrams

8 - 4 Control Circuit, Inverter

EGSAH-UD9W
EGSAX-UD9W

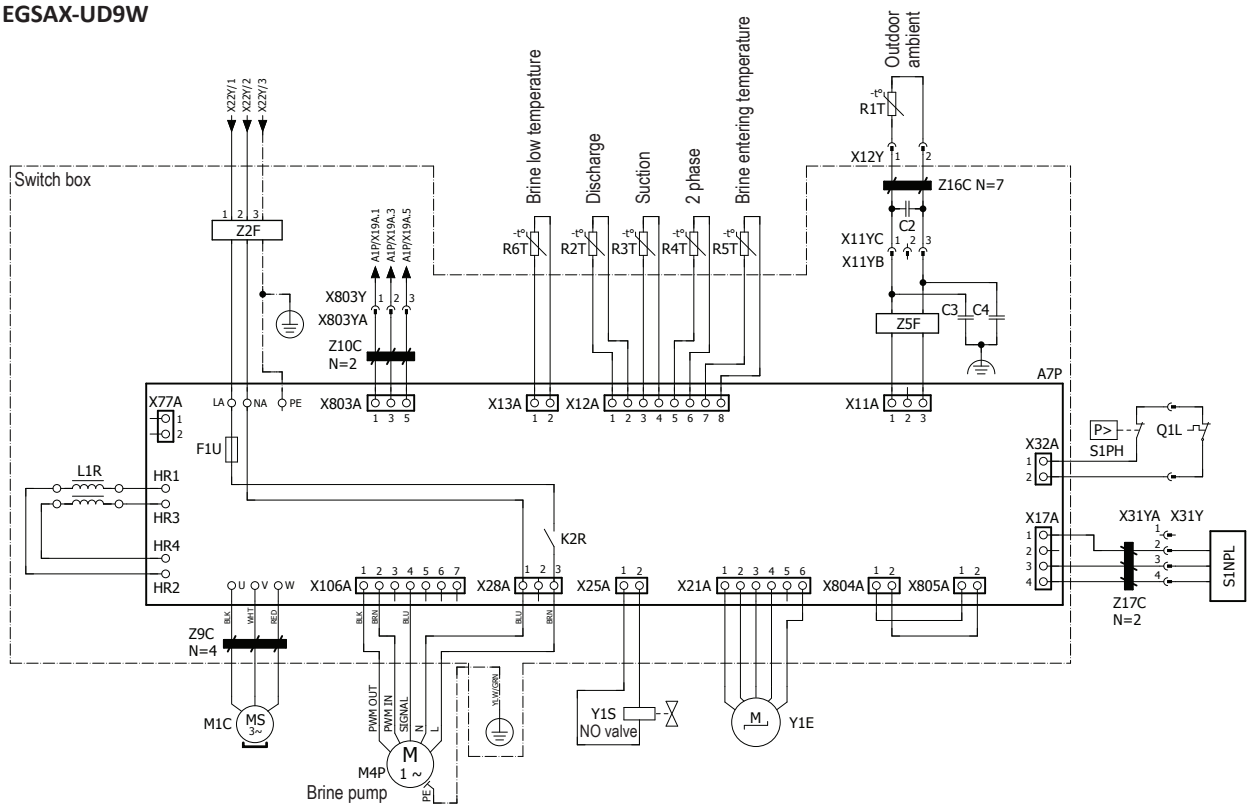

4D116863E

9 External connection diagrams

9 - 1 External Connection Diagrams

EGSAH-UD9W
EGSAX-UD9W

Electrical connection diagram Daikin Altherma Ground Source

For more details: please check unit wiring

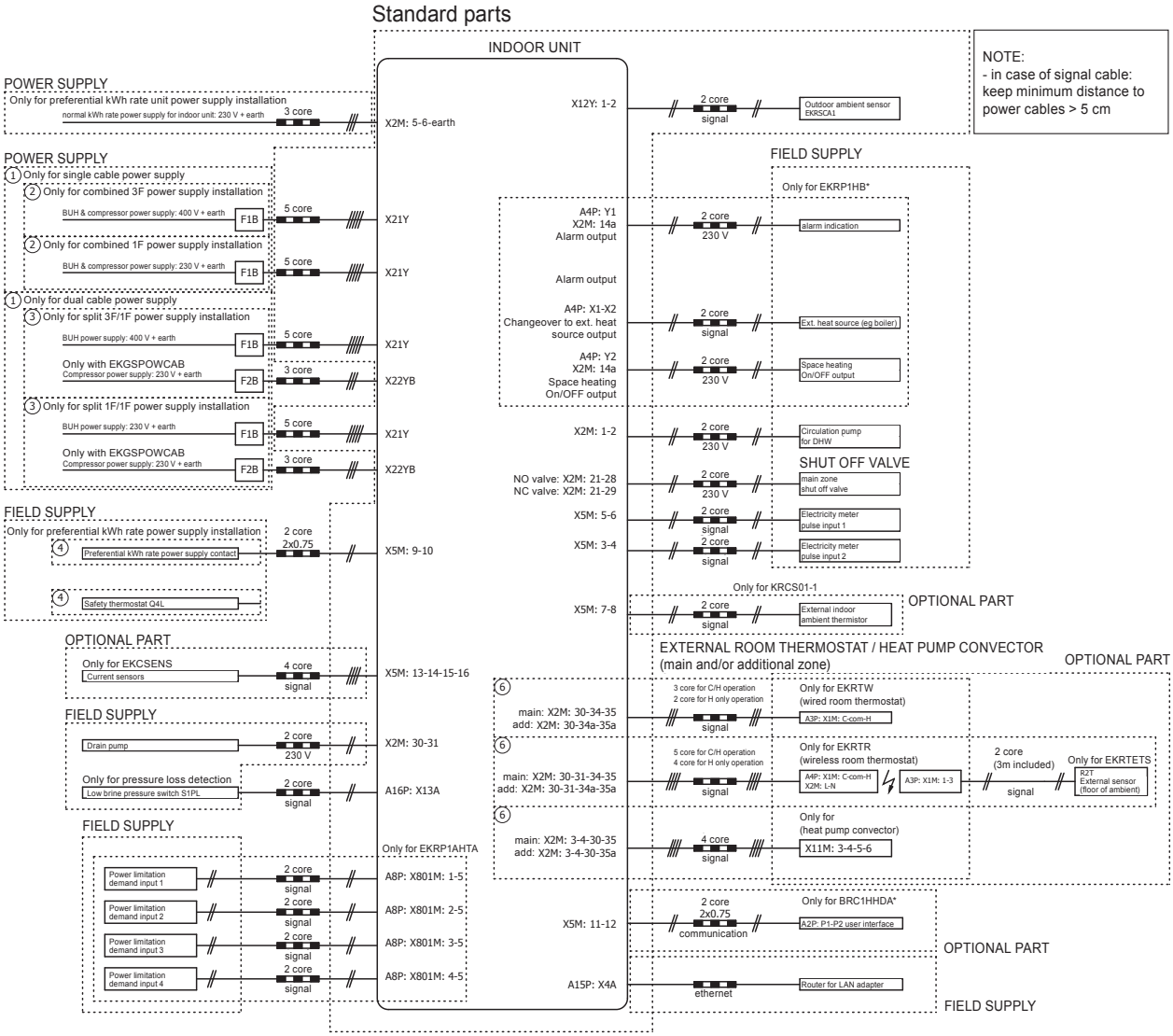

4D121919

10 Sound data

10 - 1 Sound Power Spectrum

EGSAH-UD9W
EGSAX-UD9W

Heating

EGSA*06*

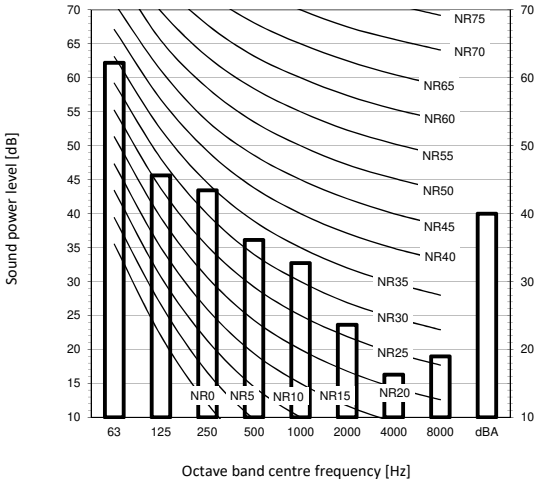

EGSA*10*

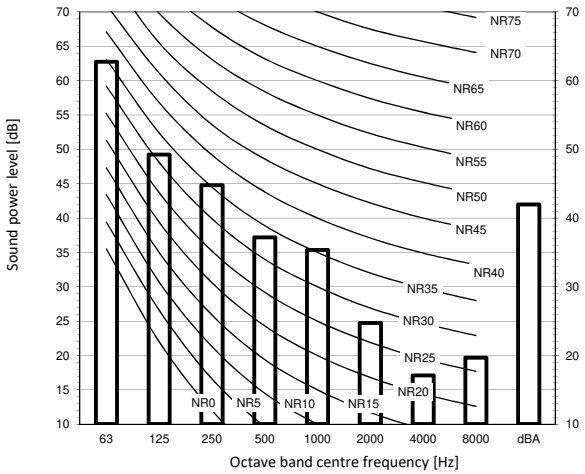

Notes

1. Data is valid at free field condition.
   Measured in a semi-anechoic chamber
2. Data is valid at nominal operation condition.
3. dBA = A-weighted sound pressure level (A scale according to IEC).
4. Reference acoustic pressure 0 dB = 20 µPa
5. If the sound is measured under actual installation conditions, the measured value will be higher due to environmental noise and sound reflections.

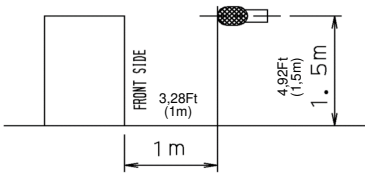

3D122374

10 Sound data

10 - 2 Sound Pressure Spectrum - Heating

EGSAH-UD9W
EGSAX-UD9W

10

Heating

EGSA*06*

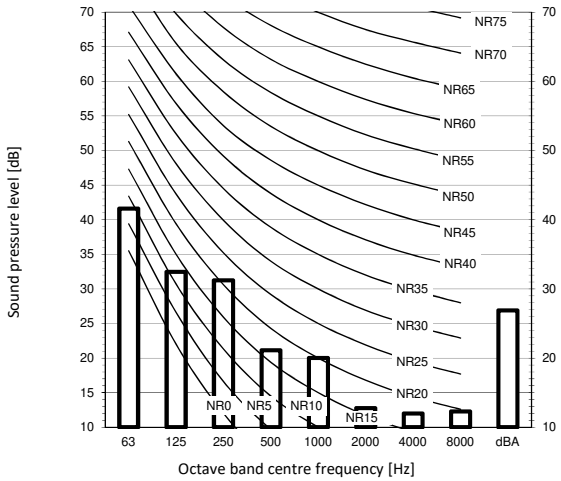

EGSA*10*

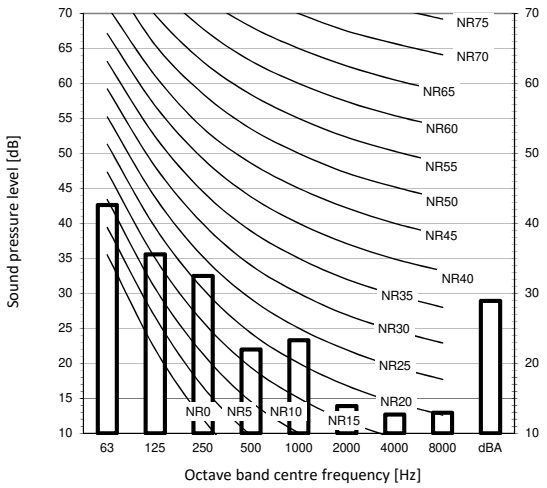

Notes
1. Data is valid at free field condition.
   Measured in a semi-anechoic chamber
2. Data is valid at nominal operation condition.
3. dBA = A-weighted sound pressure level (A scale according to IEC).
4. Reference acoustic pressure 0 dB = 20 µPa
5. If the sound is measured under actual installation conditions, the measured value will be higher due to environmental noise and sound reflections.

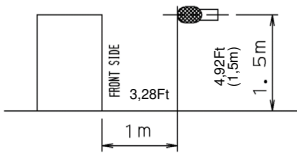

3D122375

11 Installation

11 - 1 Installation Method

EGSAH-UD9W
EGSAX-UD9W

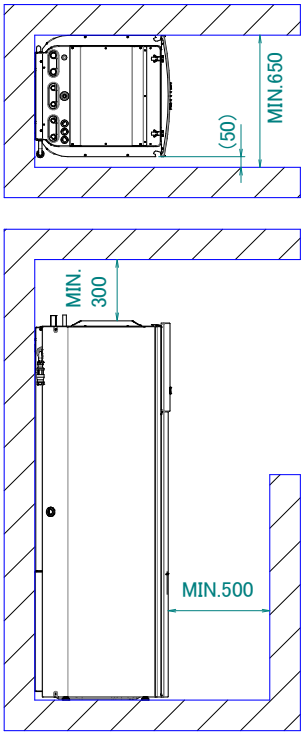

3D126000

12 Operation range

12 - 1 Operation Range

12

EGSAH-UD9W
EGSAX-UD9W

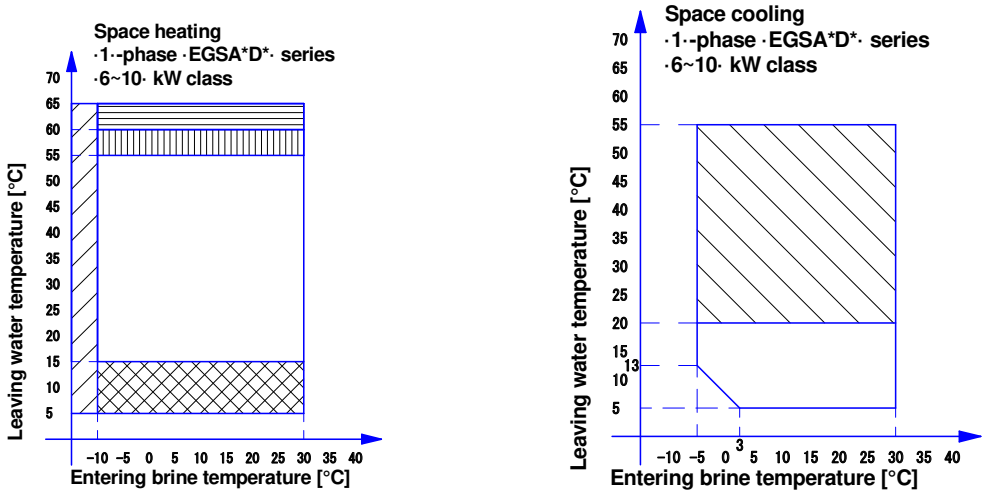

Legend

- Backup heater only operation
  Entering brine temperature = ·<-10·°C
- Heat pump operation
- Heat pump operation
  Heat pump operation if setpoint >·55·°C and ΔT = ·8·°C (ΔT = outlet temperature – inlet temperature)
- Heat pump + backup heater operation
- Pull-down area
- Heat pump operation
  Heating setpoint: ·>= 15·°C

Prevent the system from freezing by adding antifreeze to the brine side (see note).

For more information, refer to the installation manual.

In restricted power supply mode, the outdoor unit and backup heater can only operate separately.

3D122772

EGSAH-UD9W
EGSAX-UD9W

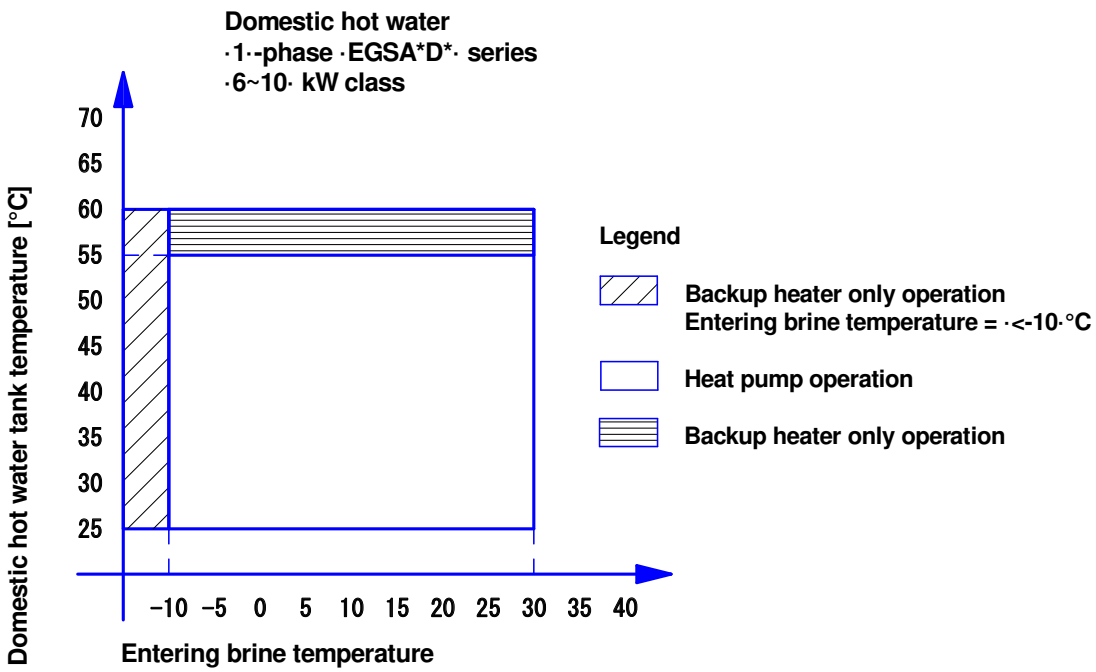

Prevent the system from freezing by adding antifreeze to the brine side (see note).

For more information, refer to the installation manual.

3D122773

13 Hydraulic performance

13 - 1 Static Pressure Drop Unit

EGSAH-UD9W
EGSAX-UD9W

Space heating/cooling circuit

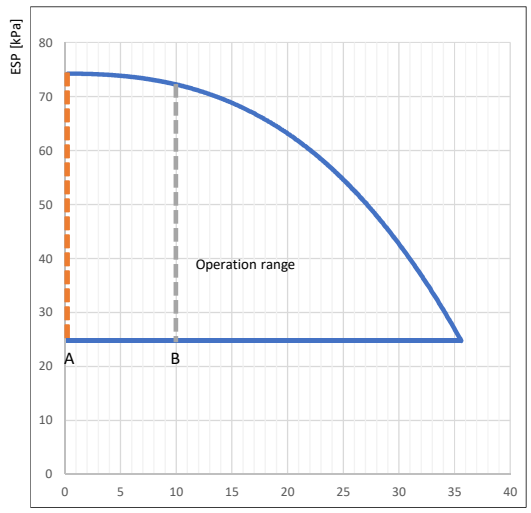

ESP: External Static Pressure
Flow: water flow through the unit
Flow [l/min]

Brine circuit
Mixture of water and propylene glycol (30V%) at an entering brine temperature of -3°C

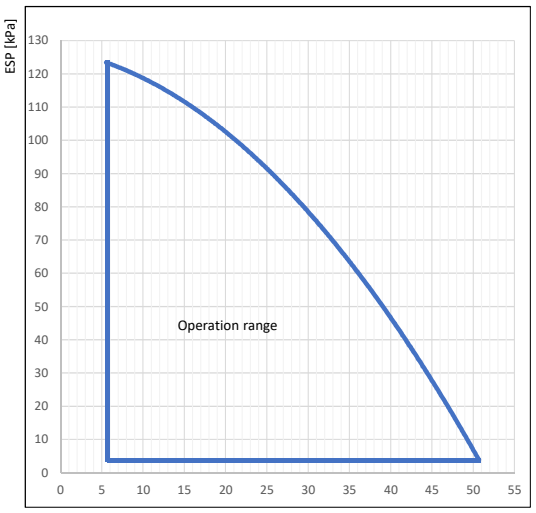

ESP: External Static Pressure
Flow: water/glycol flow through the unit
Flow [l/min]

A: Minimum water flow rate during heat pump operation
B: Minimum water flow rate during cooling operation

Selecting a flow outside the operating area can damage the unit or cause the unit to malfunction.

3D122776A





Copyright 2019 Daikin

DAIKIN EUROPE N.V.

Zandvoordestraat 300, B-8400 Oostende, Belgium

4P598592-1C 2022.04