DAIKIN

KER303A

1× 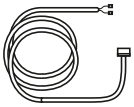

1× 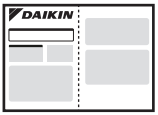



1

4× PH2

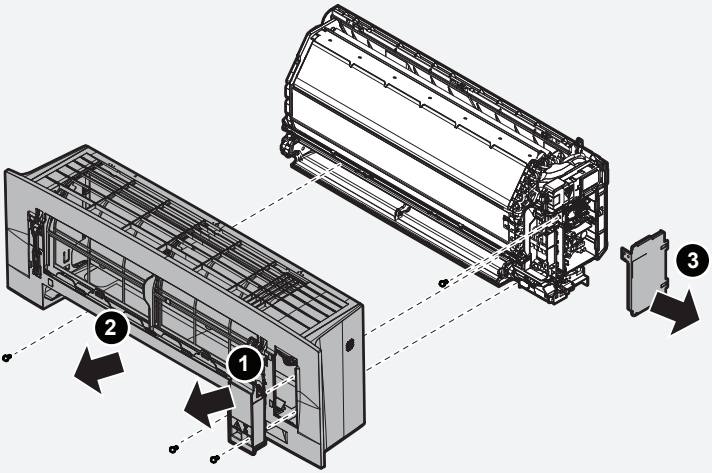

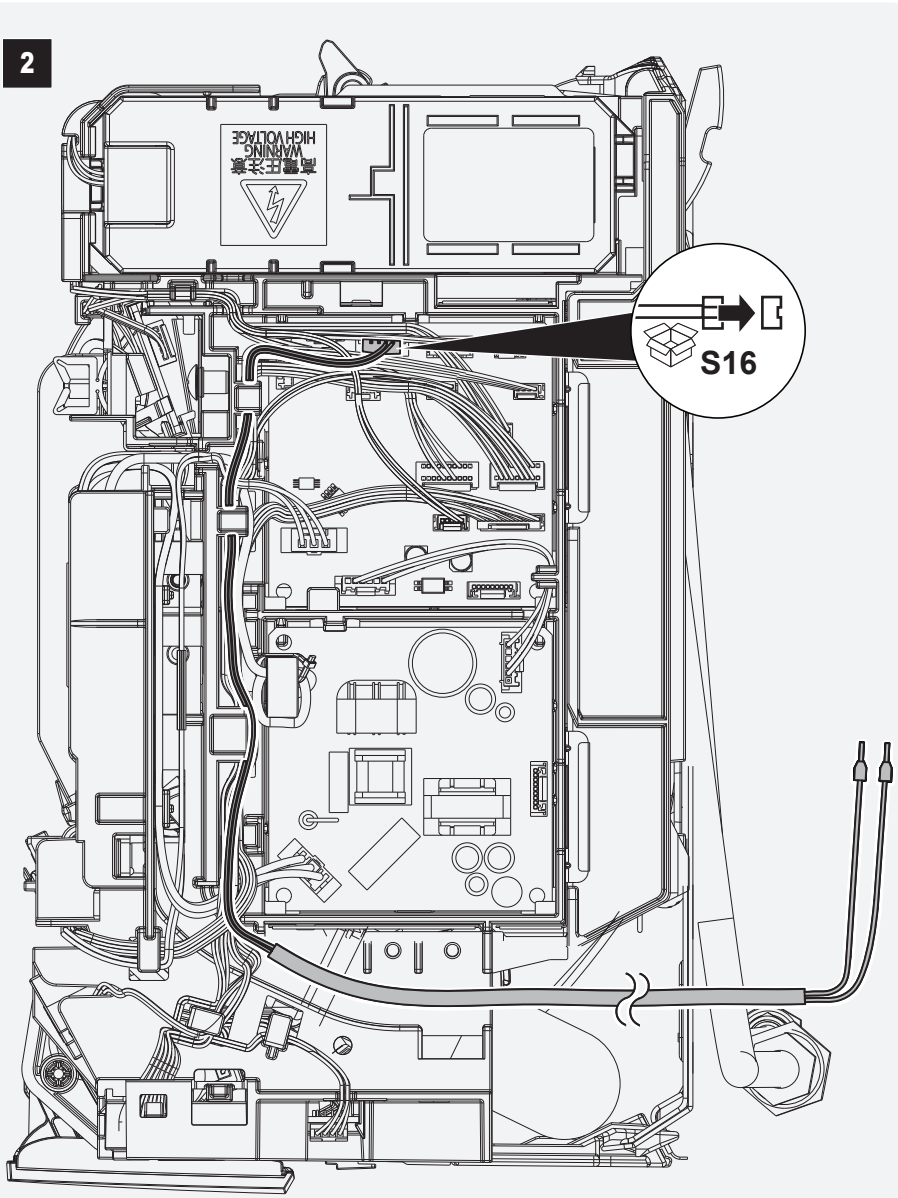

Copyright 2026 Daikin