https://daikintechnicaldatahub.eu

Installation manual

Daikin Altherma 4 H W

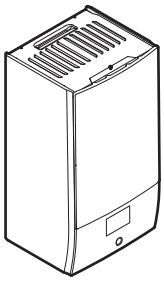

EPBX(U)07A▲4V▼
EPBX(U)10A▲4V▼
EPBX14A▲4V▼

EPBX10A▲9W▼
EPBX(U)14A▲9W▼

▲= 1, 2, 3, …, 9, A, B, C, …, Z
▼= , , 1, 2, 3, …, 9

v4.x.x (x = 0, 1, 2, …, 255)

Installation manual
Daikin Altherma 4 H W

English

Table of contents

1 About this document 2
2 Specific installer safety instructions 3
3 About the box 4
3.1 Indoor unit 4
3.1.1 To remove the accessories from the indoor unit 4
4 Unit installation 4
4.1 Preparing the installation site 4
4.1.1 Installation site requirements of the indoor unit 4
4.2 Opening and closing the unit 5
4.2.1 To open the indoor unit 5
4.2.2 To close the indoor unit 6
4.3 Installing the indoor unit 6
4.3.1 To install the indoor unit 6
4.3.2 To connect the drain hose to the drain 7
5 Piping installation 7
5.1 Preparing water piping 7
5.1.1 To check the water volume and flow rate 8
5.1.2 Third-party tank requirements 8
5.2 Connecting water piping 9
5.2.1 To connect the water piping 9
5.2.2 To fill the water circuit 10
5.2.3 To protect the water circuit against freezing 10
5.2.4 To fill the domestic hot water tank 10
5.2.5 To insulate the water piping 10
6 Electrical installation 10
6.1 About electrical compliance 11
6.2 Guidelines when connecting the electrical wiring 11
6.3 Field IO connections 11
6.4 Connections to the indoor unit 12
6.4.1 To connect the electrical wiring to the indoor unit 14
6.4.2 To connect the main power supply 15
6.4.3 To connect the backup heater power supply 16
6.4.4 To connect the normally closed shut-off valve (inlet leak stop) 18
6.4.5 To connect the shut-off valve 18
6.4.6 To connect the pumps (DHW pump and/or external pumps) 19
6.4.7 To connect the alarm output 19
6.4.8 To connect the space cooling/heating ON/OFF output 19
6.4.9 To connect the changeover to external heat source 19
6.4.10 To connect the bivalent bypass valve 20
6.4.11 To connect the decoupled bypass valve 20
6.4.12 To connect the electricity meters 21
6.4.13 To connect the safety thermostat 21
6.4.14 Smart Grid 21
6.4.15 To connect the WLAN cartridge (delivered as accessory) 23
6.4.16 To connect the Ethernet cable (Modbus / LAN) 23
6.4.17 To connect the solar input 24
7 Configuration 24
7.1 Configuration wizard 25
[10.1] Location and language 25
[10.2] NOT USED 25
[10.3] Time/date 25
[10.4] System 1/4 25
[10.5] System 2/4 26
[10.6] System 3/4 26
[10.7] System 4/4 26
[10.8] Backup heater 27
[10.9] Main zone 1/4 27
[10.10] Main zone 2/4 28
[10.11] Main zone 3/4 (Heating WD curve) 28
[10.12] Main zone 4/4 (Cooling WD curve) 28
[10.13] Additional zone 1/4 28
[10.14] Additional zone 2/4 28
[10.15] Additional zone 3/4 (Heating WD curve) 28
[10.16] Additional zone 4/4 (Cooling WD curve) 28
[10.17] Configuration wizard – DHW 1/2 28
[10.18] Configuration wizard – DHW 2/2 29
[10.19] Configuration wizard 29
7.2 Weather-dependent curve 29
7.2.1 What is a weather-dependent curve? 29
7.2.2 Using weather-dependent curves 29
7.3 Menu structure: Overview installer settings 30
8 Commissioning 31
8.1 Checklist before commissioning 32
8.2 Checklist during commissioning 33
8.2.1 To unlock the outdoor unit (compressor) 33
8.2.2 To open the stop valve of the outdoor unit's refrigerant vessel 35
8.2.3 To update the user interface software 36
8.2.4 To perform an air purge 36
8.2.5 To check the minimum flow rate 37
8.2.6 To perform an actuator test run 38
8.2.7 To perform an operation test run 39
8.2.8 To perform an underfloor heating screed dryout 40
9 Hand-over to the user 41
10 Technical data 42
10.1 Piping diagram: Indoor unit 42
10.2 Wiring diagram: Indoor unit 43

1 About this document

Target audience

Authorised installers

Software version

The settings in this document are applicable for user interface software **v4.x.x** (x = 0, 1, 2, …, 255). To see the software version of your user interface, go to [6.6.6]: `Information > About > MMI firmware version`.

Documentation set

This document is part of a documentation set. The complete set consists of:

- **General safety precautions:**
  - Safety instructions that you must read before installing
  - Format: Paper (in the box of the indoor unit)
- **Operation manual:**
  - Quick guide for basic usage
  - Format: Paper (in the box of the indoor unit)
- **User reference guide:**
  - Detailed step-by-step instructions and background information for basic and advanced usage
  - Format: Digital files on https://www.daikin.eu. Use the search function 🔍 to find your model.
- **Installation manual – Outdoor unit:**
  - Installation instructions
  - Format: Paper (in the box of the outdoor unit)
- **Installation manual – Indoor unit:**
  - Installation instructions
  - Format: Paper (in the box of the indoor unit)

- **Installer reference guide:**
  - Preparation of the installation, good practices, reference data, …
  - Format: Digital files on https://www.daikin.eu. Use the search function 🔍 to find your model.
- **Configuration reference guide:**
  - Configuration of the system.
  - Format: Digital files on https://www.daikin.eu. Use the search function 🔍 to find your model.
- **Addendum book for optional equipment:**
  - Additional info about how to install optional equipment
  - Format: Paper (in the box of the indoor unit) + Digital files on https://www.daikin.eu. Use the search function 🔍 to find your model.

The latest revision of the supplied documentation is published on the regional Daikin website and is available via your dealer.

The original instructions are written in English. All other languages are translations of the original instructions.

Technical engineering data

- A **subset** of the latest technical data is available on the regional Daikin website (publicly accessible).
- The **full set** of the latest technical data is available on the Daikin Business Portal (authentication required).

Online tools

In addition to the documentation set, some online tools are available for installers:

- **Daikin Technical Data Hub**
  - Central hub for technical specifications of the unit, useful tools, digital resources, and more.
  - Publicly accessible via https://daikintechnicaldatahub.eu.
- **Daikin Altherma 4 Monitoring Tools**
  - A hub for tools that allow you to monitor and record the Daikin Altherma 4 operation data.
  - For more information, see Daikin Altherma 4 Monitoring Tools (https://my.daikin.eu/denv/en_US/library/applications/software-finder/service-software/service-and-diagnostic-tool/daikin-altherma-4-monitoring-tools0.html).
- **Heating Solutions Navigator**
  - Digital toolbox that offers a variety of tools to facilitate the installation and configuration of heating systems.
  - To access the Heating Solutions Navigator, registration to the Stand By Me platform is required. For more information, see https://professional.standbyme.daikin.eu.
- **Daikin e-Care**
  - Mobile app for installers and service technicians that allows you to register, configure and troubleshoot heating systems.
  - Use the QR codes below to download the mobile app for iOS and Android devices. Registration to the Stand By Me platform is required to access the app.

App Store Google Play

2 Specific installer safety instructions

Always observe the following safety instructions and regulations.

Installation site (see "4.1 Preparing the installation site" [▶ 4])

WARNING
Follow the service space dimensions in this manual to install the unit correctly. See "4.1.1 Installation site requirements of the indoor unit" [▶ 4].

Opening and closing the unit (see "4.2 Opening and closing the unit" [▶ 5])

DANGER: RISK OF ELECTROCUTION

DANGER: RISK OF BURNING/SCALDING

Installing the indoor unit (see "4.3 Installing the indoor unit" [▶ 6])

WARNING
The indoor unit installation MUST be in accordance with the instructions from this manual. See "4.3 Installing the indoor unit" [▶ 6].

Piping installation (see "5 Piping installation" [▶ 7])

WARNING
Field piping MUST be in accordance with the instructions from this manual. See "5 Piping installation" [▶ 7].

WARNING
Adding anti-freeze solutions (e.g. glycol) to the water is NOT allowed.

Electrical installation (see "6 Electrical installation" [▶ 10])

DANGER: RISK OF ELECTROCUTION

WARNING
Electrical wiring MUST be in accordance with the instructions from:
- This manual. See "6 Electrical installation" [▶ 10].
- The wiring diagram, which is delivered with the unit, located on the inside of the indoor unit switch box cover. For a translation of its legend, see "10.2 Wiring diagram: Indoor unit" [▶ 43].

WARNING
- All wiring MUST be performed by an authorised electrician and MUST comply with the applicable national wiring regulation.
- Make electrical connections to the fixed wiring.
- All components procured on-site and all electrical construction MUST comply with the applicable legislation.

WARNING
ALWAYS use multicore cable for power supply cables.

WARNING
If the supply cord is damaged, it MUST be replaced by the manufacturer, its service agent or similarly qualified persons in order to avoid a hazard.

WARNING
Do NOT extend the power supply or the interconnection cable by using wire connectors, wire connection clamps, taped wires, extension cords.

These can cause overheating, electric shock or fire.

CAUTION
Do NOT push or place redundant cable length into the unit.

WARNING

The backup heater MUST have a dedicated power supply and MUST be protected by the safety devices required by the applicable legislation.

CAUTION

If the indoor unit has a separate tank with a built-in electrical booster heater, use a dedicated power circuit for the backup heater and booster heater. NEVER use a power circuit shared by another appliance. This power circuit MUST be protected with the required safety devices according to the applicable legislation.

CAUTION

To guarantee the unit is completely earthed, ALWAYS connect the backup heater power supply and the earth cable.

INFORMATION

For details on the fuse ratings, the fuse types and the circuit breaker ratings, see "6 Electrical installation" [▸ 10].

Commissioning (see "8 Commissioning" [▸ 31])

WARNING

Commissioning MUST be in accordance with the instructions from this manual. See "8 Commissioning" [▸ 31].

WARNING

After commissioning, do NOT turn OFF the circuit breakers (**c**) to the units so that the protection remains activated. In case of normal kWh rate power supply (**a**), there is one circuit breaker. In case of preferential kWh rate power supply (**b**), there are two.

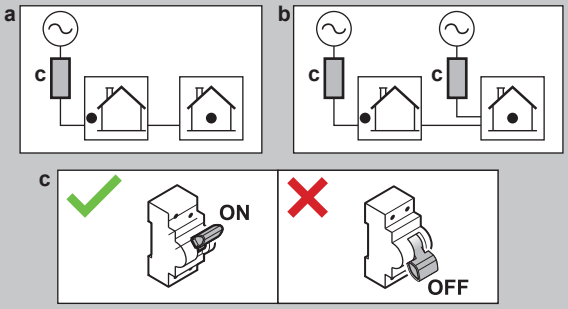

3 About the box

Keep the following in mind:

- At delivery, the unit MUST be checked for damage and completeness. Any damage or missing parts MUST be reported immediately to the claims agent of the carrier.
- Bring the packed unit as close as possible to its final installation position to prevent damage during transport.
- Prepare in advance the path along which you want to bring the unit to its final installation position.

3.1 Indoor unit

3.1.1 To remove the accessories from the indoor unit

Some accessories are located inside the unit. For more information on opening the unit, see "4.2.1 To open the indoor unit" [▸ 5].

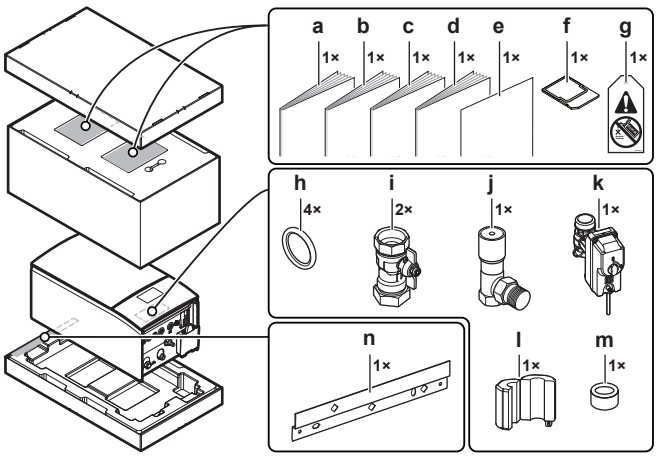

a	General safety precautions
b	Addendum book for optional equipment
c	Indoor unit installation manual
d	Operation manual
e	Addendum – Updating the BRC1HH* firmware
f	WLAN cartridge
g	"No glycol" tag (to attach to the field piping near the filling point)
h	Sealing ring for shut-off valve
i	Shut-off valve
j	Differential pressure bypass valve
k	Normally closed shut-off valve (inlet leak stop)
l+m	Ferrite cores (only for EPBX(U)10+14; to put on the Ethernet cable)
n	Wall bracket

4 Unit installation

4.1 Preparing the installation site

4.1.1 Installation site requirements of the indoor unit

- The indoor unit is designed for indoor installation only and for the following ambient temperatures:
  - Space heating operation: 5~30°C
  - Space cooling operation: 5~35°C
  - Domestic hot water production: 5~35°C
- Mind the measurement guidelines:

Maximum height difference between indoor unit and outdoor unit		10 m
Maximum height difference between domestic hot water tank and outdoor unit		10 m
Maximum water piping length between indoor unit and domestic hot water tank (piping diameter 1 1/4"[(a)])		10 m[(a)]
Maximum distance between the 3-way valve and the indoor unit (for installations with domestic hot water tank)		3 m
Maximum water piping length (single run) between outdoor unit and indoor unit in case of…		
	EPSKS04+06	
	1" field piping	20 m[(a)]
	EPSKS07	
	1" field piping	7 m[(a)]
	1 1/4" field piping	20 m[(a)]

EPSK06~14A		
	1" field piping	5 m[(a)(b)]
	1 1/4" field piping	20 m[(a)(c)]
	1 1/2" field piping + V3 outdoor model (1N~)	30 m[(a)(c)]
	1 1/2" field piping + W1 outdoor model (3N~)	50 m[(a)(c)]

(a) The precise water piping length and diameter can be determined using the Hydronic Piping Calculation tool. The Hydronic Piping Calculation tool is part of the Heating Solutions Navigator which can be reached via https://professional.standbyme.daikin.eu. Contact your dealer if you have no access to the Heating Solutions Navigator.
(b) 6 bends
(c) 8 bends

- Mind the following spacing installation guidelines:

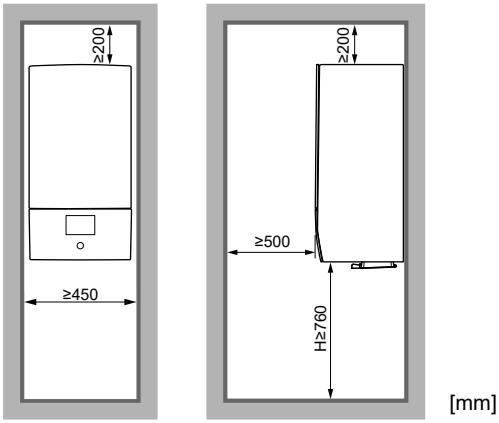

H Height measured from the bottom of the casing to the floor

4.2 Opening and closing the unit

4.2.1 To open the indoor unit

Overview

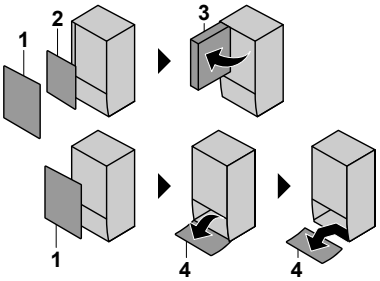

1 Front panel
2 Switch box cover
3 Switch box
4 User interface panel

Open

1 Remove the front panel.

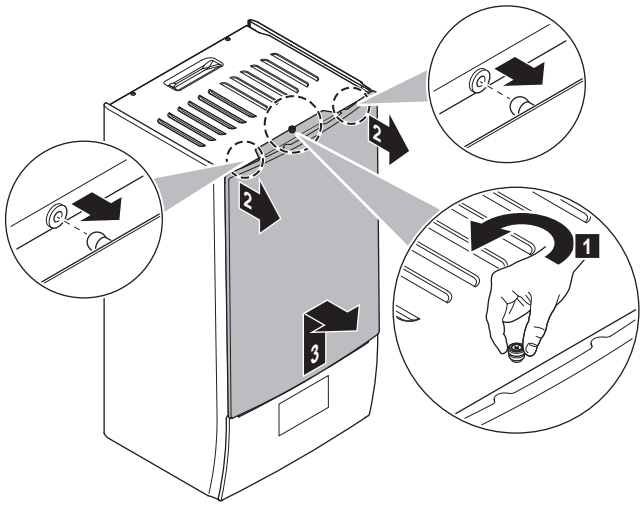

2 If you have to connect electrical wiring, remove the switch box cover.

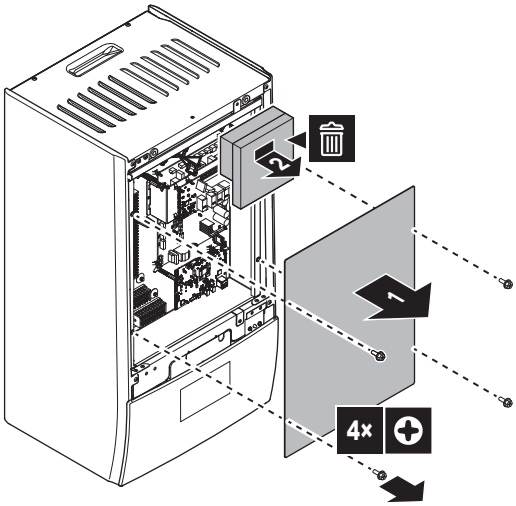

3 If you have to do work behind the switch box, open the switch box.

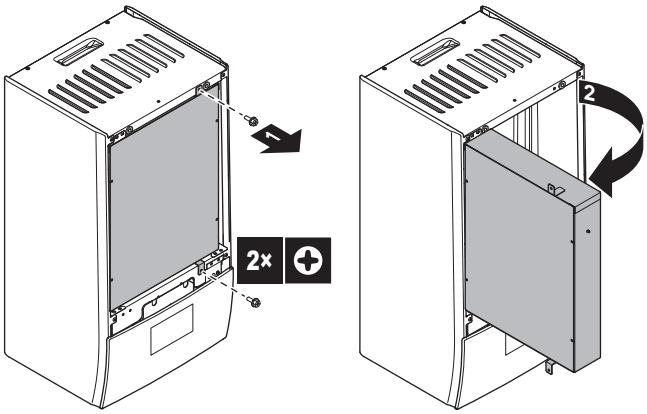

4 If you have to do work behind the user interface panel, open the user interface panel.

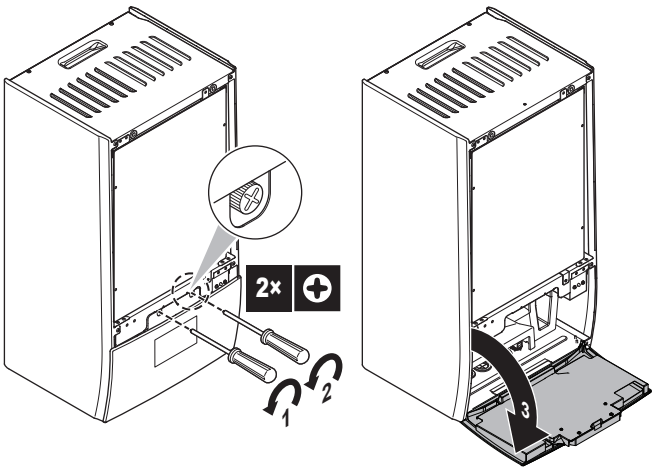

5 Optional: Remove the user interface panel.

- (1) Remove the cover (sheet metal).
- (2) Remove the cover (back of user interface).
- (3)(4) Disconnect the wire harnesses.
- (5) Remove the user interface panel.

NOTICE

The wire harnesses and connectors are fragile. Handle with care.

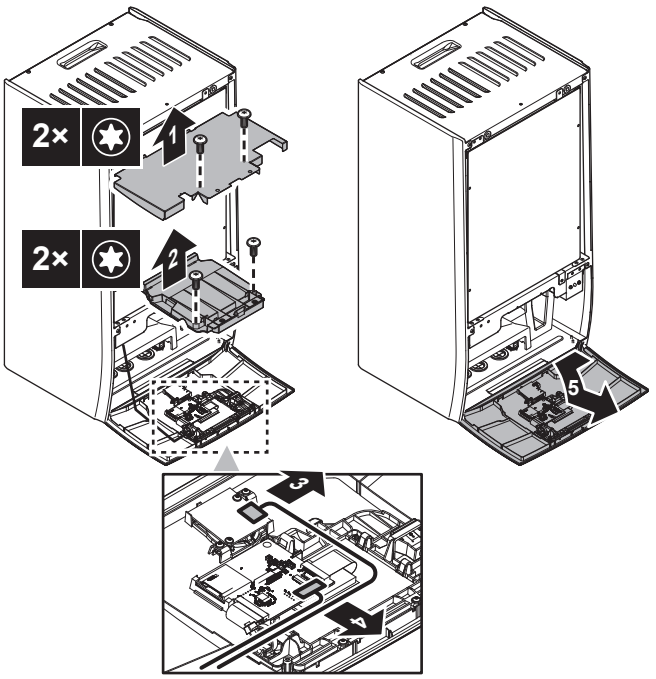

4.2.2 To close the indoor unit

1 Reinstall the user interface panel.

2 Reinstall the switch box cover and close the switch box.

3 Reinstall the front panel.

NOTICE

When reconnecting the wire harnesses, mind their orientation, especially for (1).

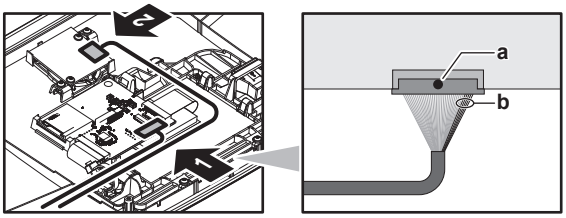

a Black dot on connector = Top side

b 5 red wires = Right side

NOTICE

When closing the indoor unit cover, make sure that the tightening torque does NOT exceed 4.1 N•m.

4.3 Installing the indoor unit

4.3.1 To install the indoor unit

1 Fix the wall bracket (accessory) to the wall (level) with 2× Ø8 mm bolts.

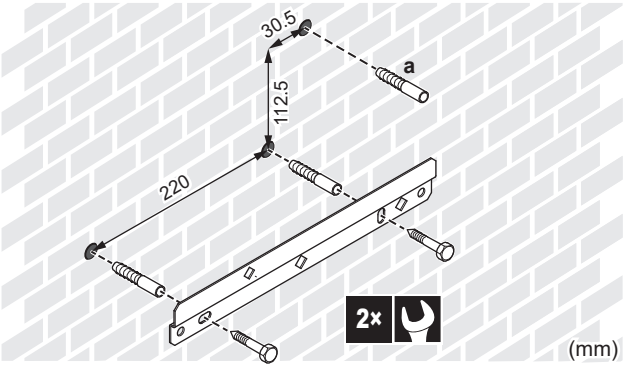

a Recommended: If you want to fix the unit to the wall from inside the unit, provide an additional screw plug.

2 Lift the unit.

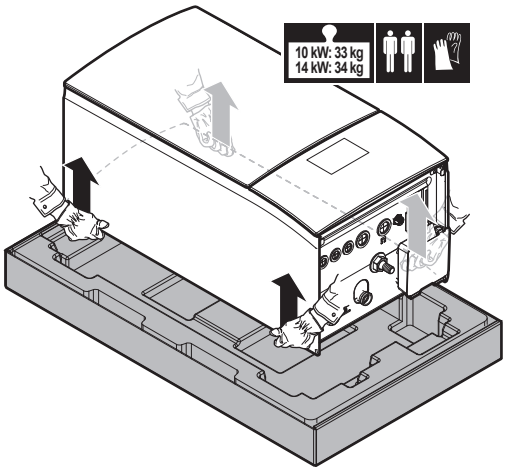

3 Attach the unit to the wall bracket:

- Tilt the top of the unit against the wall at the position of the wall bracket.
- Slide the bracket on the back of the unit over the wall bracket. Make sure the unit is fixed properly.

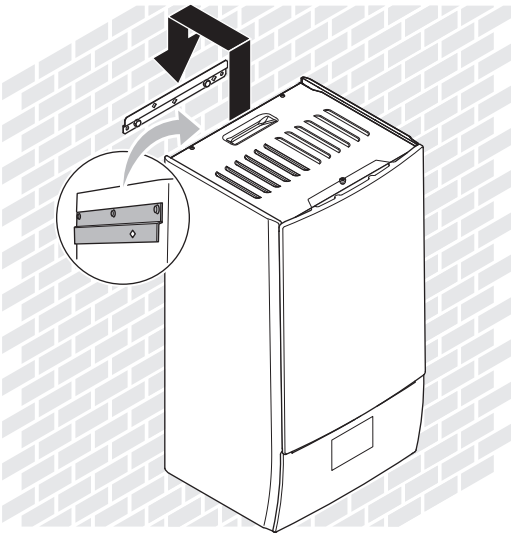

4 Recommended: If you want to fix the unit to the wall from inside the unit:

- Remove the upper front panel, and open the switch box. See "4.2.1 To open the indoor unit" [▶ 5].
- Fix the unit to the wall with an Ø8 mm screw.

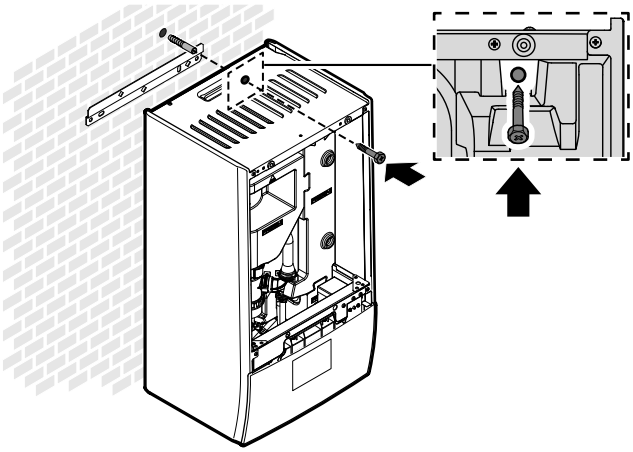

4.3.2 To connect the drain hose to the drain

Water coming from the pressure relief valve is collected in the drain pan. You must connect the drain pan to an appropriate drain according to the applicable legislation.

1 Connect a drain tube (field supply) to the drain pan connector as follows:

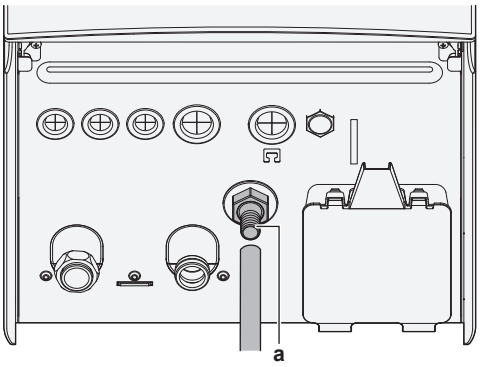

a Drain pan connector

It is recommended to use a tundish to collect the water.

5 Piping installation

5.1 Preparing water piping

NOTICE

In case of plastic pipes, make sure they are fully oxygen diffusion tight according to DIN 4726. The diffusion of oxygen into the piping can lead to excessive corrosion.

NOTICE

Water circuit requirements. Make sure to comply with the water pressure and water temperature requirements below. For additional water circuit requirements, see the installer reference guide.

- **Water pressure – Space heating/cooling circuit.** The maximum water pressure is 3 bar (=0.3 MPa). Provide adequate safeguards in the water circuit to ensure that the maximum pressure is NOT exceeded. The minimum water pressure to operate is 1 bar (=0.1 MPa).
- **Water temperature.** All installed piping and piping accessories (valve, connections,…) MUST withstand the following temperatures:

INFORMATION

The following figure is an example and may NOT completely match your system layout.

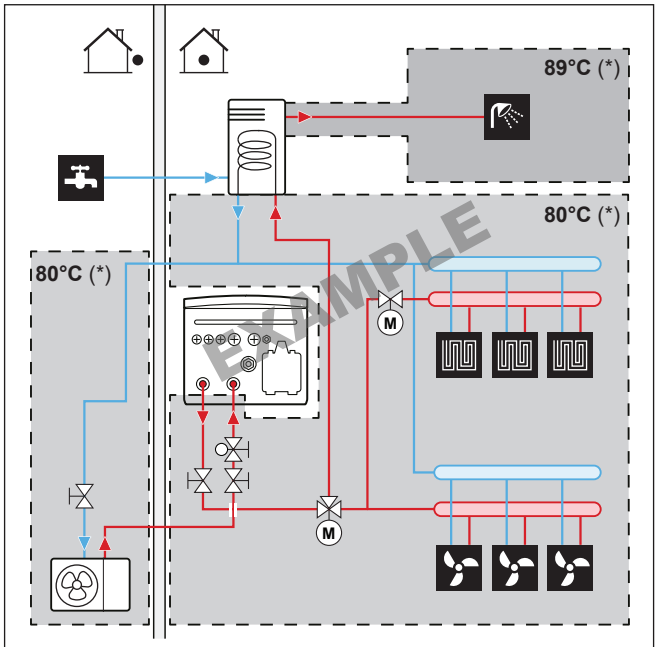

(*) Maximum temperature for piping and accessories

INFORMATION

The maximum leaving water temperature is decided based on setting [3.12] `Overheating setpoint`. This limit defines the maximum leaving water **in the system**. Depending on the value of this setting, the maximum LWT setpoint will also be reduced by 5°C to allow stable control towards the setpoint.

The maximum leaving water temperature **in the main zone** is decided based on setting [1.19] `Overheating water circuit`, only in case [3.13.5] `Bizone kit installed` is enabled. This limit defines the maximum leaving water **in the main zone**. Depending on the value of this setting, the maximum LWT setpoint will also be reduced by 5°C to allow stable control towards the setpoint.

5.1.1 To check the water volume and flow rate

Minimum water volume

The installation needs to be made in such a way that a minimum water volume (see table below) is always available in the space heating/cooling loop of the unit, even when the available volume towards the unit is reduced because of closure of valves (heat emitters, thermostatic valves, etc.) in the space heating/cooling circuit. The internal water volume of the outdoor unit is NOT considered for this minimum water volume.

If…	Then the minimum water volume is…
Cooling operation	▪ For EPBX07: 13 l ▪ For EPBX10: 25 l ▪ For EPBX14: 30 l
Heating/defrost operation	▪ For EPBX07: 13 l ▪ For EPBX10: 55 l ▪ For EPBX14: 55 l

Example 1: Minimum water volume (bold lines) in case all emitters are closed via shut-off valves.

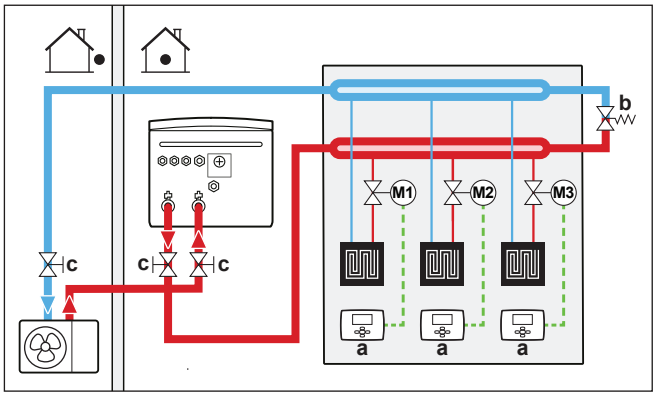

a Individual room thermostat (optional)
b Differential pressure bypass valve (delivered as accessory)
c Shut-off valve

Example 2: Minimum water volume (bold lines) in case one emitter circuit cannot be closed via shut-off valves. In this case, that one emitter circuit is also considered as part of the minimum water volume.

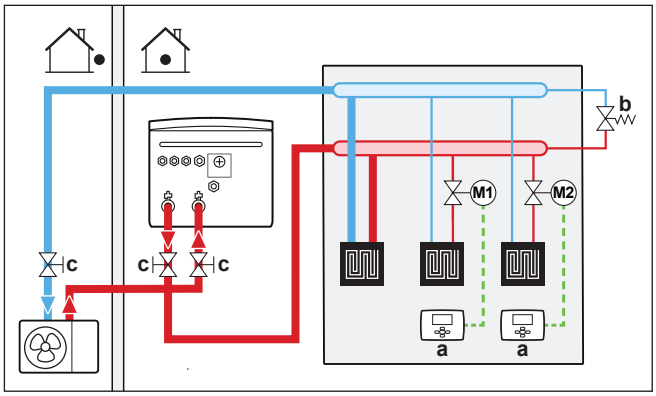

a Individual room thermostat (optional)
b Differential pressure bypass valve (delivered as accessory)
c Shut-off valve

Maximum water volume

Use the following graph to determine the maximum water volume for the calculated pre-pressure.

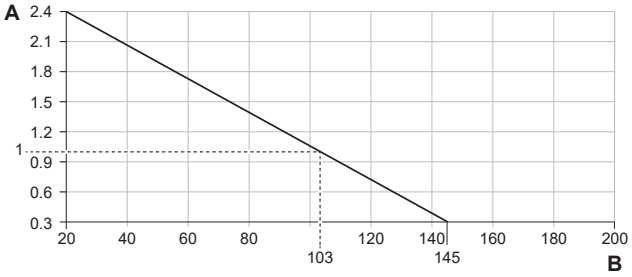

A Pre-pressure (bar)
B Maximum water volume (l)

Minimum flow rate

Check that the minimum flow rate in the installation is guaranteed in all conditions. For this purpose, use the differential pressure bypass valve delivered with the unit, and respect the minimum water volume.

If operation is…	Then…[a]
Cooling / heating start-up / defrost / backup heater operation	The **REQUIRED** minimum flow rate is: ▪ For EPBX07: 20 l/min ▪ For EPBX10: 22 l/min ▪ For EPBX14: 24 l/min
Domestic hot water production	The **RECOMMENDED** minimum flow rate is: ▪ For EPBX07: 20 l/min ▪ For EPBX10: 25 l/min ▪ For EPBX14: 25 l/min

[a] • **REQUIRED** minimum flow rate = Minimum flow rate needed for reliable and error-free operation.
• **RECOMMENDED** minimum flow rate = Minimum flow rate recommended for optimal system performance.

NOTICE

When circulation in each or certain space heating loops is controlled by remotely controlled valves, it is important that the **REQUIRED** minimum flow rate is guaranteed, even if all valves are closed. In case the **REQUIRED** minimum flow rate cannot be reached, a flow error 7H will be generated.

See the installer reference guide for more information.

See the recommended procedure as described in "8.2 Checklist during commissioning" [▶ 33].

5.1.2 Third-party tank requirements

In case of a third-party tank, the tank shall adhere to the following requirements:

- The heat exchanger coil of the tank is ≥1.05 m² and ≤3.7 m².
- The tank thermistor must be located above the heat exchanger coil.
- The booster heater must be located above the heat exchanger coil.

NOTICE

Performance. Performance data for third-party tanks CANNOT be provided, and performance CANNOT be guaranteed.

NOTICE

Configuration. Configuration of a third-party tank depends on the size of the heat exchanger coil of the tank. For more information, see the configuration reference guide.

5.2 Connecting water piping

5.2.1 To connect the water piping

NOTICE

Do NOT use excessive force when connecting the field piping and make sure the piping is aligned properly. Deformed pipes can cause the unit to malfunction.

Delivered as accessory:

1 normally closed shut-off valve (+ quick clip)	To prevent refrigerant from entering the indoor unit in case of a refrigerant leak in the outdoor unit.
2 shut-off valves (+ O-rings)	To facilitate service and maintenance.
1 differential pressure bypass valve	To ensure the minimum flow rate (and prevent overpressure).

1 Remove the protective caps.

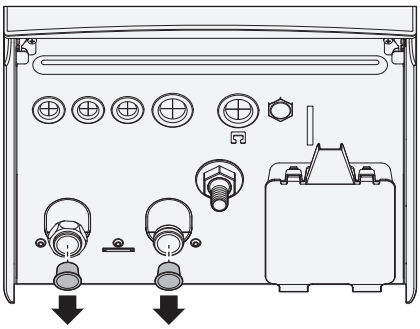

2 Install the normally closed shut-off valve (+ quick clip), and shut-off valves (+ O-rings) as follows:

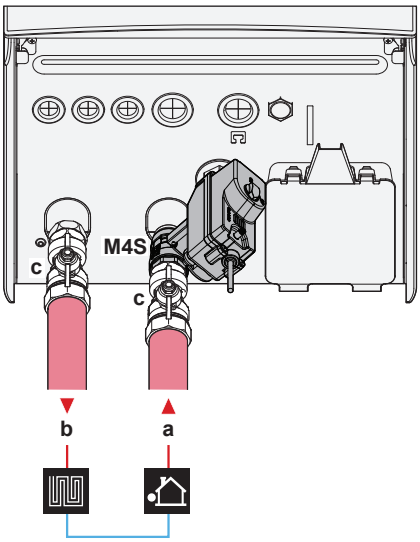

a Water IN from outdoor unit (screw connection)
- EPBX(U)07: 1"
- EPBX(U)10+14: 1 1/4"

b Water OUT to space heating (screw connection)
- EPBX(U)07: 1"
- EPBX(U)10+14: 1 1/4"

c Shut-off valve (+ O-rings)
- EPBX(U)07: male 1" – female 1"
- EPBX(U)10+14: male 1" – female 1 1/4"

M4S Normally closed shut-off valve (+ quick clip)(inlet leak stop)(quick coupling – female 1")

3 Install the differential pressure bypass valve on the space heating water outlet.

NOTICE

Differential pressure bypass valve (delivered as accessory). We recommend to install the differential pressure bypass valve in the space heating water circuit.

- Mind the minimum water volume when choosing the installation location of the differential pressure bypass valve (at the indoor unit, or at the collector). See "5.1.1 To check the water volume and flow rate" [▸ 8].
- Mind the minimum flow rate when adjusting the differential pressure bypass valve setting. See "5.1.1 To check the water volume and flow rate" [▸ 8] and "8.2.5 To check the minimum flow rate" [▸ 37].

NOTICE

Install air purge valves at all local high points.

If air is not purged correctly via these high points, and if there are contaminants (i.e. sludge and microbiological organisms that create biofilm and gases) in the system / field piping, then this can lead to unintended activation of the indoor unit gas sensor. This generates error A0-02, and automatically stops the unit. Error A0-02 can only be cleared by trained installers with the required competences, as the procedure includes the generation of a Digital Key.

NOTICE

In case an optional domestic hot water tank is installed: A pressure relief valve (field supply) with an opening pressure of maximum 10 bar (= 1 MPa) must be installed on the domestic cold water inlet connection in accordance with the applicable legislation.

NOTICE

In case an optional domestic hot water tank is installed:

- A drain device and pressure relief device must be installed on the cold water inlet connection of the domestic hot water cylinder.
- To avoid back siphonage, it is recommended to install a non-return valve on the water inlet of the domestic hot water tank in accordance with the applicable legislation. Make sure it is NOT between the pressure relief valve and the DHW tank.
- It is recommended to install a pressure reducing valve on the cold water inlet in accordance with the applicable legislation.
- It is recommended to install an expansion vessel on the cold water inlet in accordance with the applicable legislation.
- It is recommended to install the pressure relief valve on a higher position than the top of the domestic hot water tank. Heating of the domestic hot water tank causes water to expand and without pressure relief valve the water pressure inside the tank can rise above the tank design pressure. Also the field installation (piping, tapping points, etc.) connected to the tank is subjected to this high pressure. To prevent this, a pressure relief valve needs to be installed. The overpressure prevention depends on the correct operation of the field installed pressure relief valve. If this is NOT working correctly, overpressure will deform the tank and water leakage may occur. To confirm good operation, regular maintenance is required.

5.2.2 To fill the water circuit

To fill the water circuit, use a field supply filling kit. Make sure you comply with the applicable legislation.

Attach the "No glycol" tag (delivered as accessory) to the field piping near the filling point.

WARNING

Adding anti-freeze solutions (e.g. glycol) to the water is NOT allowed.

NOTICE

If automatic air purge valves are installed in the field piping:

- Between the outdoor unit and the indoor unit (on the entering water pipe of the indoor unit), they must be closed after commissioning.
- After the indoor unit (on the emitter side), they may remain open after commissioning.

NOTICE

To prevent the pump from running in dry conditions, only power ON the unit when there is water in the unit.

5.2.3 To protect the water circuit against freezing

About freeze protection

Frost can damage the system. To prevent the hydraulic components from freezing, the unit is equipped with the following:

- The software is equipped with special frost protection functions such as water pipe freeze prevention that include the activation of a pump in case of low temperatures. However, in case of a power failure, these functions cannot guarantee protection.
- The outdoor unit is equipped with two factory mounted freeze protection valves. Freeze protection valves drain the water from the outdoor unit before it can freeze and damage the unit. This is to prevent R290 leaks in the outdoor unit. **Note:** The factory mounted freeze protection valves are designed to protect the outdoor unit, not the field piping.

To ensure protection of field piping, install **additional freeze protection valves** at all lowest points of the field piping. Insulate these field installed freeze protection valves in a similar way as the water piping, but do NOT insulate the inlet and outlet (release) of these valves.

Optionally, you can install **normally closed valves** (located indoors near the piping entry/exit points). These valves can prevent that all water from the indoor piping is drained when the freeze protection valves open. **Note:** The normally closed shut-off valve that is delivered as accessory with the indoor unit, which is mandatory to install on the indoor unit for safety reasons (inlet leak stop), does NOT prevent drainage of the indoor piping when the freeze protection valves open. For this, you need additional normally closed valves (optional).

For more information, see the installer reference guide.

NOTICE

When freeze protection valves are installed, set the minimum cooling setpoint (default=7°C) at least 2°C higher than the maximum opening temperature of the freeze protection valves (the opening temperature of the factory-mounted freeze protection valves is 3°C ±1).

If you set the minimum cooling setpoint lower than the safe value (i.e. maximum opening temperature of freeze protection valves + 2°C), you risk that the freeze protection valves open when cooling to the minimum setpoint.

INFORMATION

The minimum leaving water temperature is decided based on setting [3.11] `Undercooling setpoint`. This limit defines the minimum leaving water **in the system**. Depending on the value of this setting, the minimum LWT setpoint will also be increased by 4°C to allow stable control towards the setpoint.

The minimum leaving water temperature **in the main zone** is decided based on setting [1.20] `Undercooling water circuit`, only in case [3.13.5] `Bizone kit installed` is enabled. This limit defines the minimum leaving water **in the main zone**. Depending on the value of this setting, the minimum LWT setpoint will also be increased by 4°C to allow stable control towards the setpoint.

WARNING

Adding anti-freeze solutions (e.g. glycol) to the water is NOT allowed.

5.2.4 To fill the domestic hot water tank

See the installation manual of the domestic hot water tank.

5.2.5 To insulate the water piping

The piping in the complete water circuit MUST be insulated to prevent condensation during cooling operation and reduction of the heating and cooling capacity.

Outdoor water piping insulation

See the installation manual of the outdoor unit, or the installer reference guide.

6 Electrical installation

DANGER: RISK OF ELECTROCUTION

WARNING

- All wiring MUST be performed by an authorised electrician and MUST comply with the applicable national wiring regulation.
- Make electrical connections to the fixed wiring.
- All components procured on-site and all electrical construction MUST comply with the applicable legislation.

WARNING

ALWAYS use multicore cable for power supply cables.

WARNING

If the supply cord is damaged, it MUST be replaced by the manufacturer, its service agent or similarly qualified persons in order to avoid a hazard.

WARNING

Do NOT extend the power supply or the interconnection cable by using wire connectors, wire connection clamps, taped wires, extension cords.

These can cause overheating, electric shock or fire.

CAUTION

Do NOT push or place redundant cable length into the unit.

NOTICE

The distance between the high voltage and low voltage cables should be at least 50 mm.

INFORMATION

When installing field supply or option cables, foresee sufficient cable length. This will make it possible to open the switch box and gain access to other components during service.

6.1 About electrical compliance

Only for the backup heater of the indoor unit

See "6.4.3 To connect the backup heater power supply" [▶ 16].

6.2 Guidelines when connecting the electrical wiring

NOTICE

We recommend using solid wires. If stranded wires are used, slightly twist the strands to consolidate the end of the conductor for either direct use in the terminal clamp or insertion in a round crimp-style terminal. Details are described in "Guidelines when connecting the electrical wiring" in the installer reference guide.

Tightening torques

Indoor unit:

Item	Tightening torque (N•m)
M3.5 (X44M, X45M)	0.88 ±10%
M4 (X40M, X41M)	1.47 ±10%
M4 (earth)	1.47 ±10%

6.3 `Field IO` connections

When connecting the electrical wiring, for certain components, you can choose which terminal pins to use. After connection, you must tell the user interface which terminal pins you used so that it matches your system layout:

- Preferably, via the breadcrumbs in [13] `Field IO`.
- Alternatively, via the field codes (see the field settings table in the installer reference guide).

1	**Choose which terminal pins to use for which component.**
1a	In case of `Field IO` inputs: Choose between the standard possibilities (❶❷❸❹❺ as shown in the respective topics of "6.4 Connections to the indoor unit" [▶ 12] and in the addendum book for optional equipment). For example: 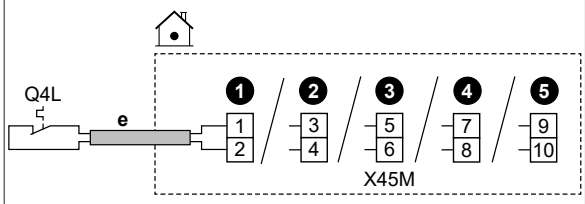
1b	In case of `Field IO` outputs: You have multiple options.
1b.1	**Option 1** (**preferred**; only possible if the running current and/or inrush current of the connected component does NOT exceed the maximum running current and/or inrush current of the terminals as listed in the respective topic)**:** Choose between the standard possibilities (❶❷❸❹ as shown in the respective topics of "6.4 Connections to the indoor unit" [▶ 12] and in the addendum book for optional equipment). For example: ▪ Maximum running current and/or inrush current of respective terminals = 0.3 A ▪ Maximum running current and/or inrush current of connected component is ≤0.3 A 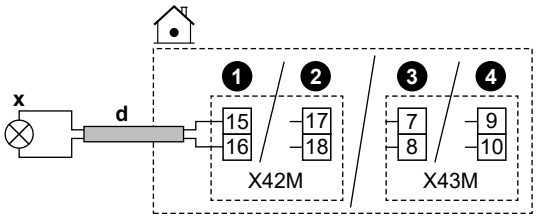
1b.2	**Option 2** (in case the running current and/or inrush current of the connected component exceeds the maximum running current and/or inrush current of the terminals as listed in the respective topic): Choose between the standard possibilities (❶❷❸❹ as shown in the respective topics of "6.4 Connections to the indoor unit" [▶ 12] and in the addendum book for optional equipment), but instead of directly connecting to the component, install a relay (field supply) with an external power supply outside of the switch box in-between. For example: ▪ Maximum running current and/or inrush current of respective terminals = 0.3 A ▪ Maximum running current and/or inrush current of connected component is >0.3 A 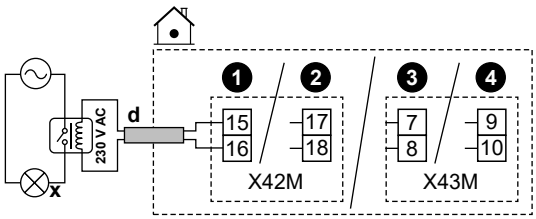
1b.3	**Option 3**: Alternatively, instead of choosing one of the standard possibilities (❶❷❸❹), you can use the terminal pins of any of the other `Field IO` outputs (if they are selectable in the user interface). However, you must also check if the running current and/or inrush current of the connected component exceeds the maximum running current and/or inrush current of the terminals as listed in the respective topic. If exceeded, you must install a relay in-between (similar to **Option 2**).
2	**Tell the user interface which terminal pins you used for which component.**
2.1	Go to [13] `Field IO`.

2.2	Select the used terminal block. **Result:** The screen with the connections on that terminal block is shown. For example: 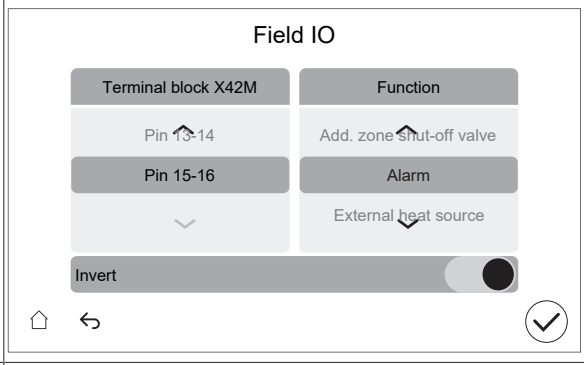
2.3	On the left, select the used terminal pins.
2.4	On the right, select the connected component: ▪ `Field IO` inputs (see table below) ▪ `Field IO` outputs (see table below)
2.5	Set whether the logic has to be inverted: **Note:** not all terminals / connected options can be inverted. If the selection is possible or not is visible in [13] `Field IO`.

If the component is…	Then set…
Normally open	`Invert` = OFF
Normally closed	`Invert` = ON

Field IO inputs

If the connected component is…	Then select `Function` = …
Remote outdoor sensor. See addendum book for optional equipment (and "6.4 Connections to the indoor unit" [▶ 12]).	`External outdoor sensor`
Remote indoor sensor. See addendum book for optional equipment (and "6.4 Connections to the indoor unit" [▶ 12]).	`External indoor sensor`
Smart Grid contacts. See "6.4.14 Smart Grid" [▶ 21].	`HV/LV Smart Grid Contact 1` `HV/LV Smart Grid Contact 2`
Preferential kWh rate power supply contact. See "6.4.2 To connect the main power supply" [▶ 15].	`HP Tariff Contact`
Safety thermostats for unit. See "6.4.13 To connect the safety thermostat" [▶ 21].	`Safety thermostat unit`
Smart Grid meter contact. See "6.4.14 Smart Grid" [▶ 21].	`Smart Meter Contact`
Solar input. (only possible in case of standalone tank EKHWP) See "6.4.17 To connect the solar input" [▶ 24].	`Solar input`

Field IO outputs

If the connected component is…	Then select `Function` = …
Shut-off valves for main zone and additional zone. See "6.4.5 To connect the shut-off valve" [▶ 18]	`Main zone shut-off valve` `Add. zone shut-off valve`
Alarm output. See "6.4.7 To connect the alarm output" [▶ 19].	`Alarm`
Changeover to external heat source. See "6.4.9 To connect the changeover to external heat source" [▶ 19].	`External heat source`
Bivalent bypass valve. See "6.4.10 To connect the bivalent bypass valve" [▶ 20].	`Bivalent bypass valve`
Decoupled bypass valve. See "6.4.11 To connect the decoupled bypass valve" [▶ 20].	`Decoupled bypass valve`
Space cooling/heating operation ON/OFF output for the main zone or additional zone. See "6.4.8 To connect the space cooling/heating ON/OFF output" [▶ 19].	`Cooling/Heating mode`
Heat pump convectors. See addendum book for optional equipment (and "6.4 Connections to the indoor unit" [▶ 12]).	

DHW pump + extra external pumps.
See "6.4.6 To connect the pumps (DHW pump and/or external pumps)" [▶ 19].
	`DHW pump`
	`C/H secondary pump`
	`C/H pump ext. main`
	`C/H pump ext. add.`

Booster heater (in case of DHW tank). See addendum book for optional equipment (and "6.4 Connections to the indoor unit" [▶ 12]).	`Booster heater`
3-way valve (in case of DHW tank). See addendum book for optional equipment (and "6.4 Connections to the indoor unit" [▶ 12]).	`3-Way Valve`

6.4 Connections to the indoor unit

Item	Description
Power supply (main)	See "6.4.2 To connect the main power supply" [▶ 15].
Power supply (backup heater)	See "6.4.3 To connect the backup heater power supply" [▶ 16].
Normally closed shut-off valve (inlet leak stop)	See "6.4.4 To connect the normally closed shut-off valve (inlet leak stop)" [▶ 18].
Shut-off valve	See "6.4.5 To connect the shut-off valve" [▶ 18].
Domestic hot water pump or external pumps	See "6.4.6 To connect the pumps (DHW pump and/or external pumps)" [▶ 19].
Alarm output	See "6.4.7 To connect the alarm output" [▶ 19].
Space cooling/heating operation control	See "6.4.8 To connect the space cooling/heating ON/OFF output" [▶ 19].

Item	Description
Changeover to external heat source control	See "6.4.9 To connect the changeover to external heat source" [▶ 19].
Bivalent bypass valve	See "6.4.10 To connect the bivalent bypass valve" [▶ 20].
Decoupled bypass valve	See "6.4.11 To connect the decoupled bypass valve" [▶ 20].
Electricity meters	See "6.4.12 To connect the electricity meters" [▶ 21].
Safety thermostat	See "6.4.13 To connect the safety thermostat" [▶ 21].
Smart Grid	See "6.4.14 Smart Grid" [▶ 21].
WLAN cartridge	See "6.4.15 To connect the WLAN cartridge (delivered as accessory)" [▶ 23].
Ethernet cable	See "6.4.16 To connect the Ethernet cable (Modbus / LAN)" [▶ 23].
Solar input (only possible in case of standalone tank EKHWP)	See "6.4.17 To connect the solar input" [▶ 24].
Room thermostat (wired or wireless)	See below table.
	Wires: 1 mm² Maximum load: 0.1 A, 230 V AC
	MMI For the main zone: ▪ [1.12] `Control` ▪ [1.13] `External room thermostat` For the additional zone: ▪ [2.12] `Control` ▪ [2.13] `External room thermostat`
Heat pump convector	There are different controllers and setups possible for the heat pump convectors. Depending on the setup, you also need to implement a relay (field supply, see addendum book for optional equipment). For more information, see: ▪ Installation manual of the heat pump convectors ▪ Installation manual of the heat pump convector options ▪ Addendum book for optional equipment
	Wires: 1 mm² Maximum load: 0.1 A, 230 V AC This is a `Field IO` output connection. See "6.3 `Field IO` connections" [▶ 11].
	MMI [13] `Field IO` (`Cooling/Heating mode`) For the main zone: ▪ [1.12] `Control` ▪ [1.13] `External room thermostat` For the additional zone: ▪ [2.12] `Control` ▪ [2.13] `External room thermostat`

Item	Description
Remote outdoor sensor	See: ▪ Installation manual of the remote outdoor sensor ▪ Addendum book for optional equipment
	Wires: 2×0.75 mm² This is a `Field IO` input connection. See "6.3 `Field IO` connections" [▶ 11].
	MMI [13] `Field IO` (`External outdoor sensor`) [5.22] `External ambient sensor offset`
Remote indoor sensor	See: ▪ Installation manual of the remote indoor sensor ▪ Addendum book for optional equipment
	Wires: 2×0.75 mm² This is a `Field IO` input connection. See "6.3 `Field IO` connections" [▶ 11].
	MMI [13] `Field IO` (`External indoor sensor`) [1.33] `External room sensor offset`
Human Comfort Interface	See: ▪ Installation and operation manual of the Human Comfort Interface ▪ Addendum book for optional equipment
	Wires: 2×(0.75~1.25 mm²) Maximum length: 500 m
	MMI [1.12] `Control` [1.38] `Room sensor offset`
Bizone kit	See: ▪ Installation manual of the bizone kit ▪ Addendum book for optional equipment
	Use the cable delivered with the bizone kit.
	MMI [3.13.5] `Bizone kit installed`
(in case of DHW tank) 3-way valve	See: ▪ Installation manual of the 3-way valve ▪ Addendum book for optional equipment
	Wires: 3×1 mm² Maximum load: 0.1 A, 230 V AC This is a `Field IO` output connection. See "6.3 `Field IO` connections" [▶ 11].
	MMI [13] `Field IO` (`3-Way Valve`) [4] `Domestic hot water`

Item	Description
(in case of DHW tank) Domestic hot water tank thermistor	See: ▪ Installation manual of the domestic hot water tank ▪ Addendum book for optional equipment
	Wires: 2 The thermistor and connection wire (12 m) are delivered with the domestic hot water tank.
	MMI [4] `Domestic hot water`
(in case of DHW tank) Power supply for booster heater (from indoor unit to thermal protector of booster heater)	See: ▪ Installation manual of the DHW tank ▪ Addendum book for optional equipment
	Wires: (2+GND)×2.5 mm²
	MMI [4.14] `Booster heater`
(in case of DHW tank) Power supply for booster heater (from mains to indoor unit)	See: ▪ Installation manual of the domestic hot water tank ▪ Addendum book for optional equipment
	Wires: 2+GND Maximum running current: 13 A
	MMI [4.14] `Booster heater`

for room thermostat (wired or wireless):

In case of…	See…
Wireless room thermostat	▪ Installation manual of the wireless room thermostat ▪ Addendum book for optional equipment
Wired room thermostat without multi-zoning base unit	▪ Installation manual of the wired room thermostat ▪ Addendum book for optional equipment

Wired room thermostat with multi-zoning base unit	▪ Installation manual of the wired room thermostat (digital or analogue) + multi-zoning base unit
	▪ Addendum book for optional equipment
	▪ In this case:
	  ▪ You need to connect the wired room thermostat (digital or analogue) to the multi-zoning base unit
	  ▪ You need to connect the multi-zoning base unit to the outdoor unit
	  ▪ For cooling/heating operation, you also need to implement a relay (field supply, see addendum book for optional equipment)

6.4.1 To connect the electrical wiring to the indoor unit

Opening the unit

See "4.2.1 To open the indoor unit" [▶ 5].

Cable routing

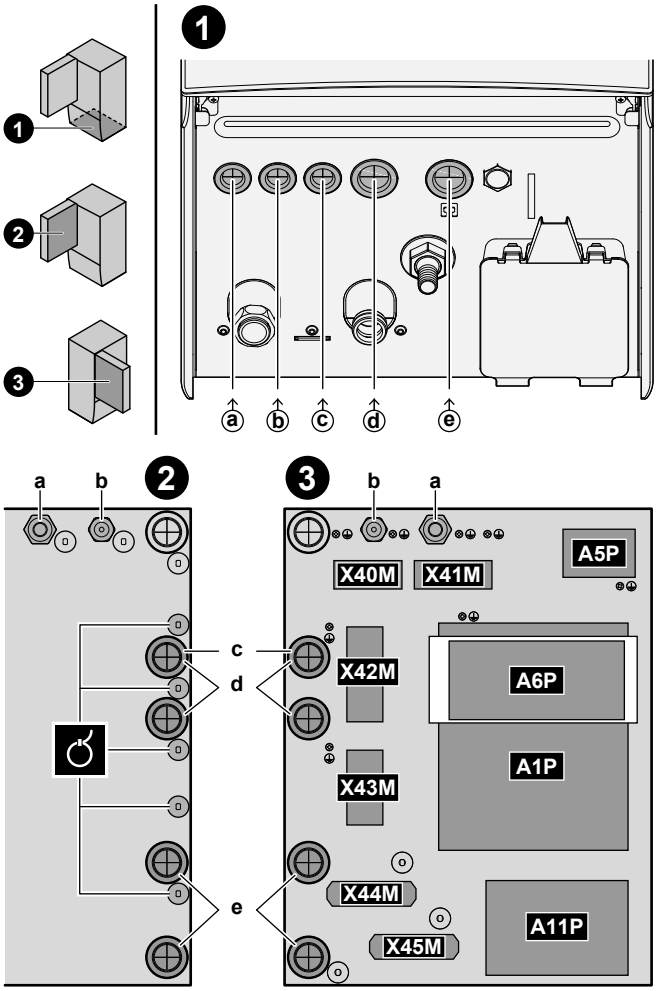

❶	Entry into the unit (from the bottom)
❷	Entry into the switch box (from the back) + strain relief (cable ties or cable glands)
❸	Terminal blocks and PCBs (inside the switch box): ▪ A1P: Hydro PCB ▪ A5P: Power supply PCB ▪ A6P: Multistep backup heater PCB ▪ A11P: Interface PCB

Cables

Note: For the Ethernet cable, see "6.4.16 To connect the Ethernet cable (Modbus / LAN)" [▶ 23].

#	Cable	Terminal block
a	Backup heater power supply	X41M
b	Interconnection cable (= main power supply)	X40M
c	Normal kWh rate power supply for the indoor unit (in case the outdoor unit is connected to a preferential kWh rate power supply)	X42M

#	Cable	Terminal block
d	High voltage options: ▪ Heat pump convector (option kit) ▪ Room thermostat (option kit) ▪ Shut-off valve (field supply) ▪ Domestic hot water pump + extra external pumps (field supply) ▪ Alarm output (field supply) ▪ Changeover to external heat source control (field supply) ▪ Bivalent bypass valve (field supply) ▪ Decoupled bypass valve (field supply) ▪ Space heat/cool operation control (field supply) ▪ Smart Grid (high voltage contacts) (field supply) ▪ 3-way valve (in case of DHW tank) ▪ Power supply for booster heater (from mains to indoor unit) (in case of DHW tank) ▪ Power supply for booster heater and thermal protection (from indoor unit DHW tank) (in case of DHW tank)	X42M+X43M
e	Low voltage options: ▪ Preferential power supply contact (field supply) ▪ Human Comfort Interface (option kit) ▪ Outdoor ambient temperature sensor (option kit) ▪ Indoor ambient temperature sensor (option kit) ▪ Electricity meters (field supply) ▪ Safety thermostat (field supply) ▪ Smart Grid (field supply) ▪ Domestic hot water tank thermistor (option kit) (in case of DHW tank) ▪ Bizone mixing kit (option kit) ▪ Solar input (field supply)	X44M+X45M

INFORMATION

When installing field supply or option cables, foresee sufficient cable length. This will make it possible to remove/reposition the switch box and gain access to other components during service.

CAUTION

Do NOT push or place redundant cable length into the unit.

6.4.2 To connect the main power supply

NOTICE

Anti-blockage safety routine – Pumps and valves:

The following pumps and valves are equipped with an anti-blockage safety routine. This means that when the component is inactive (in case of pumps), closed (in case of shut-off valves) or at standstill (in case of bizone kit mixing valve) for 24 h, then the component will operate for a short period of time to ensure it does not get stuck.

- `Unit pump`
- `C/H secondary pump`
- `C/H pump ext. main`
- `C/H pump ext. add.`
- `Main zone shut-off valve`
- `Add. zone shut-off valve`
- `Bizone kit mixing valve`
- `Bizone kit direct pump`
- `Bizone kit mixed pump`

Note:

- To enable these anti-blockage safety routines, the unit must be connected to the power supply all year round.
- During maintenance mode the anti-blockage safety routine does not run.
- When an anti-blockage safety routine is initiated for one component (pump or shut-off valve) in a specific zone, the other component in that zone, if installed, will also be deblocked. **Example:** If the pump of the main zone is being deblocked, the shut-off valve of that zone will also be deblocked.

This topic describes 2 possible ways to connect the main power supply:

- In case of normal kWh rate power supply
- In case of preferential kWh rate power supply

In case the outdoor unit is connected to a normal kWh rate power supply

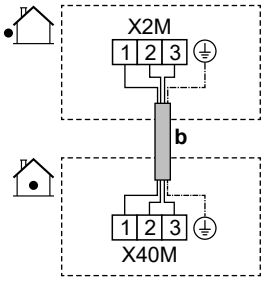

	b	Interconnection cable (= main power supply) (outdoor unit connected to a normal kWh rate power supply)	▪ Follow cable route ⓑ→ in "6.4.1 To connect the electrical wiring to the indoor unit" [▸ 14]. ▪ Wires: (3+GND)×1.5 mm²
MMI	—		

In case the outdoor unit is connected to a preferential kWh rate power supply

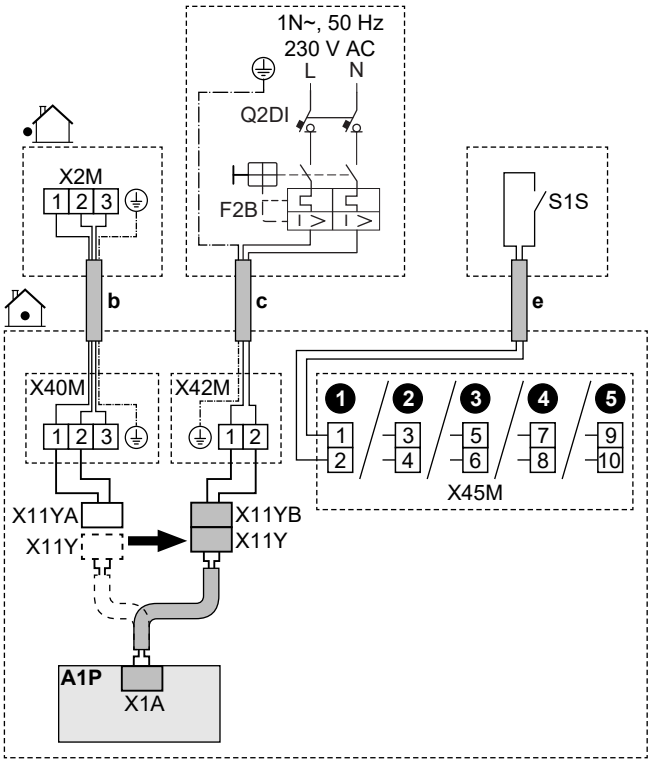

	b	Interconnection cable (= main power supply) (outdoor unit connected to a preferential kWh rate power supply)	▪ Follow cable route ⓑ→ in "6.4.1 To connect the electrical wiring to the indoor unit" [▸ 14]. ▪ Wires: (3+GND)×1.5 mm²
	c	Normal kWh rate power supply for the indoor unit	▪ Follow cable route ⓒ→ in "6.4.1 To connect the electrical wiring to the indoor unit" [▸ 14]. ▪ Wires: (2+GND)×1.5 mm² ▪ Maximum running current: 5 A ▪ Recommended field fuse (F2B): 6 A
			▪ Q2DI: Earth leakage circuit breaker / residual current device In the power supply line, ALWAYS install a residual current device (RCD) that complies with the national wiring regulation. This MUST be an RCD of 30 mA with an instantaneous action, unless otherwise defined by the national wiring regulation.
	e	Preferential kWh rate power supply contact (S1S)	▪ Follow cable route ⓔ→ in "6.4.1 To connect the electrical wiring to the indoor unit" [▸ 14]. ▪ Wires: 2×0.75 mm² ▪ Maximum length: 50 m. ▪ Contact rating: 16 V DC ▪ This is a `Field IO` input connection. See "6.3 `Field IO` connections" [▸ 11].
	X11Y	▪ Disconnect X11Y from X11YA. ▪ Connect X11Y to X11YB.	
MMI	▪ [13] `Field IO` (`HP Tariff Contact`) ▪ [9.14.1] `Operation mode` (`Heat pump tariff`)		

6.4.3 To connect the backup heater power supply

WARNING

The backup heater MUST have a dedicated power supply and MUST be protected by the safety devices required by the applicable legislation.

WARNING

Take care when installing a fuse <10 A.

Refer to setting [10.8] `Configuration wizard - Backup heater` so a correct limitation is applied.

CAUTION

To guarantee the unit is completely earthed, ALWAYS connect the backup heater power supply and the earth cable.

CAUTION

If the indoor unit has a separate tank with a built-in electrical booster heater, use a dedicated power circuit for the backup heater and booster heater. NEVER use a power circuit shared by another appliance. This power circuit MUST be protected with the required safety devices according to the applicable legislation.

NOTICE

If the backup heater is not powered, then:

- Space heating and tank heat-up is not allowed.
- Error AA-01 (`Backup heater overheated or BUH power cable not connected`) is generated.

NOTICE

The output of the backup heater depends on the wiring and the selection in the user interface. Make sure that the power supply matches the selection in the user interface.

Possible layouts in case of 9W models (9 kW multistep backup heater)

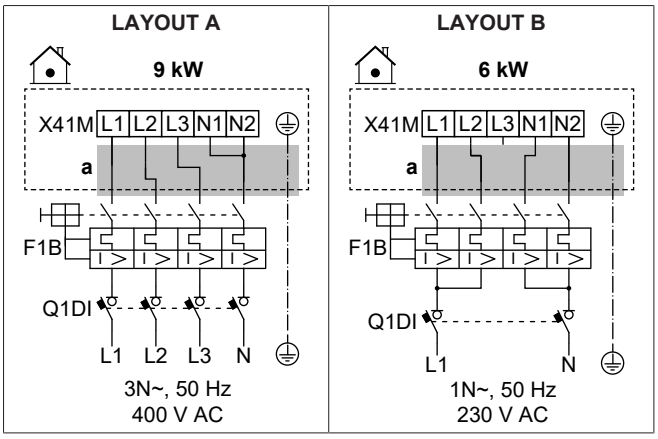

LAYOUT C

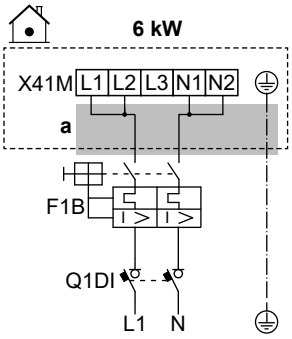

Possible layouts in case of 4V models (4.5 kW multistep backup heater)

LAYOUT D

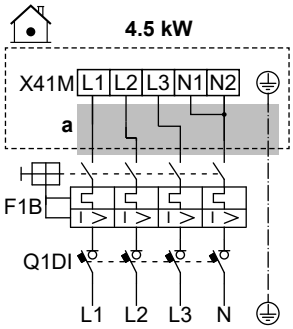

LAYOUT E

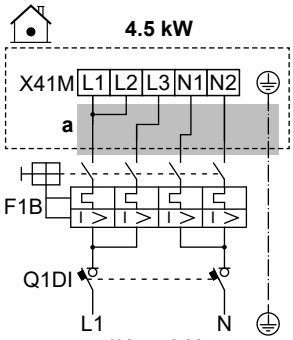

LAYOUT F

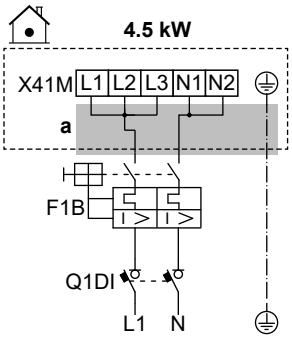

LAYOUT G

For this layout, you need option kit EKBUKRW3.

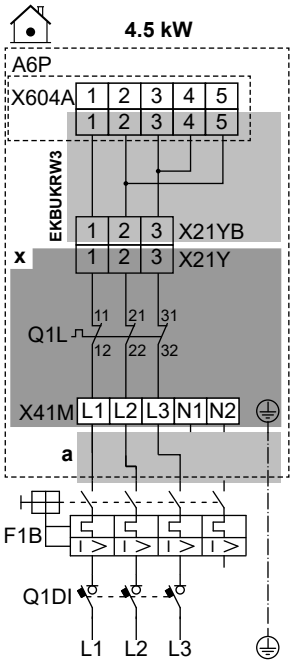

LAYOUT H

For this layout, you need option kit EKBUKRW1.

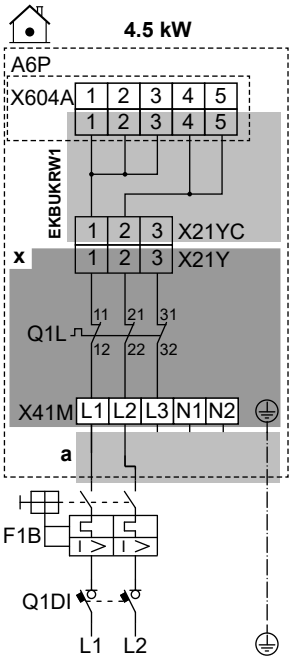

	a	Follow cable route ⓐ→ in "6.4.1 To connect the electrical wiring to the indoor unit" [▶ 14].
	x	Factory-mounted
	EKBUKRW1	Option kit: Backup heater wire harness for a 2-phase 230 V without N power supply. To be used instead of the factory-mounted wire harness (with connector X21YA).
	EKBUKRW3	Option kit: Backup heater wire harness for a 3-phase 230 V without N power supply. To be used instead of the factory-mounted wire harness (with connector X21YA).
	F1B	Overcurrent fuse (field supply)
	Q1DI	Earth leakage circuit breaker (field supply)
	Q1L	Thermal protector backup heater
MMI	[5.5] `Backup heater`	

Specifications of wiring components

Component		LAYOUT							
		A	B	C	D	E	F	G	H
Power supply:									
	Voltage	390-410 V	220-240 V		390-410 V	220-240 V			
	Power	9 kW	6 kW		4.5 kW				
	Rated current	13 A	13 A	26.1	6.5 A	13 A	19.6	17 A[(a)]	19.6 A[(a)]
	Phase	3N~	1N~		3N~	1N~		3~	2~
	Frequency	50 Hz							
Wire size		MUST comply with national wiring regulation							
		Wire size based on the current, but minimum 2.5 mm²		Min. 6 mm²	Wire size based on the current, but minimum 2.5 mm²		Min. 4 mm²	Wire size based on the current, but minimum 2.5 mm²	Min. 4 mm²
		5-core cable		3-core cable	5-core cable		3-core cable	4-core cable	3-core cable
		3L+N+GND	2L+2N+GND	L+N+GND	3L+N+GND	2L+2N+GND	L+N+GND	3L+GND	2L+GND

Component	LAYOUT							
	A	B	C	D	E	F	G	H
Recommended overcurrent fuse	4-pole 16A		2-pole 32A	4-pole 10A	4-pole 16A	2-pole 25A	4-pole 20A	2-pole 25A
Earth leakage circuit breaker / residual current device	In the power supply line, ALWAYS install a residual current device (RCD) that complies with the national wiring regulation. This MUST be an RCD of 30 mA with an instantaneous action, unless otherwise defined by the national wiring regulation.							

[a] Electrical equipment complying with EN/IEC 61000-3-12 (European/International Technical Standard setting the limits for harmonic currents produced by equipment connected to public low-voltage systems with input current >16 A and ≤75 A per phase).

6.4.4 To connect the normally closed shut-off valve (inlet leak stop)

NOTICE

The shut-off valve (inlet leak stop) is equipped with an anti-blockage safety routine. To enable this routine, the unit must be connected to the power supply all year round. This routine operates as follows every 14 days after the last execution:

- If the unit is not operational, the anti-blockage safety routine is executed (i.e. the valve closes for a short period of time).
- If the unit is operational, the anti-blockage safety routine is postponed for a maximum of 7 days. If the unit is still operational after these 7 days, the unit will be temporarily forced to stop in order to execute the anti-blockage safety routine.

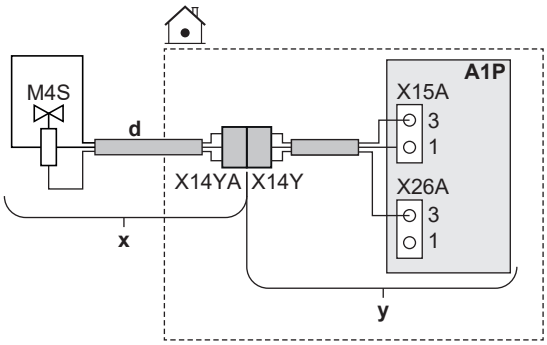

	x	Delivered as accessory
	y	Factory-mounted
	d	Follow cable route ⓓ→ in "6.4.1 To connect the electrical wiring to the indoor unit" [▸ 14].
	M4S	Normally closed shut-off valve (inlet leak stop)
	X14Y	Connect X14YA to X14Y.
MMI	—	

6.4.5 To connect the shut-off valve

INFORMATION

Shut-off valve usage example. In case of one LWT zone, and a combination of underfloor heating and heat pump convectors, install a shut-off valve before the underfloor heating to prevent condensation on the floor during cooling operation.

NOTICE

Wiring is different for a NC (normally closed) valve and a NO (normally open) valve.

In case of normally closed shut-off valves

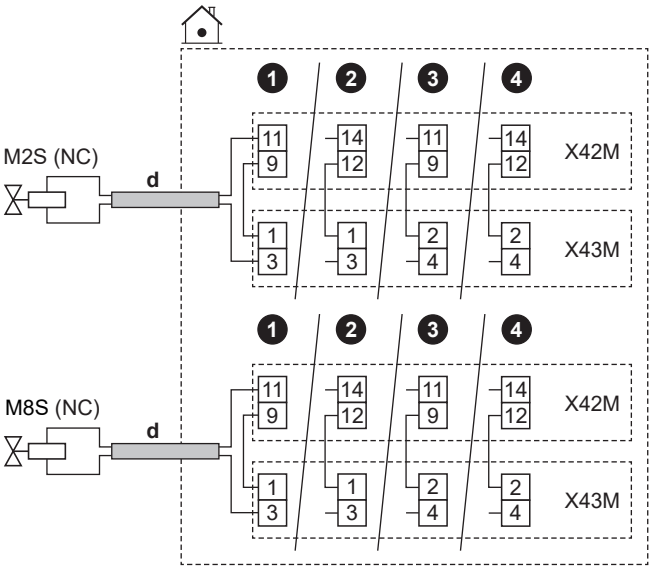

In case of normally open shut-off valves

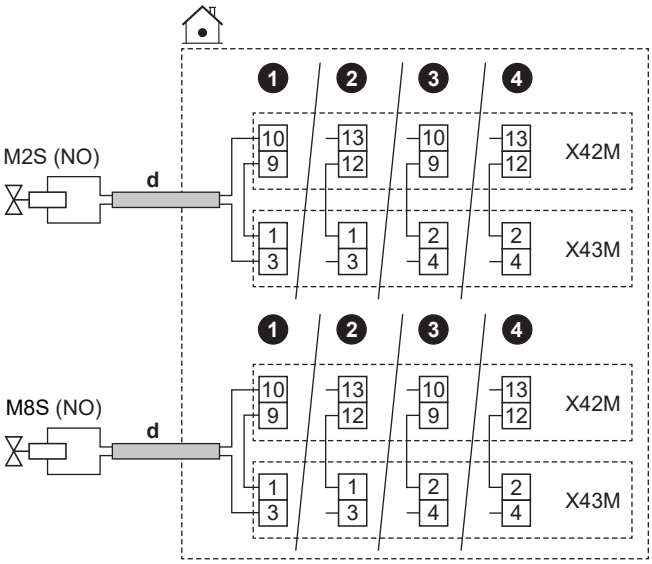

	d	▪ Follow cable route ⓓ→ in "6.4.1 To connect the electrical wiring to the indoor unit" [▸ 14]. ▪ Wires: (2 + bridge)×1 mm² ▪ This is a `Field IO` output connection. See "6.3 `Field IO` connections" [▸ 11].	
	M2S	Shut-off valve for the main zone	Maximum load: 0.1 A, 230 V AC
	M8S	Shut-off valve for the additional zone	
	NC	Normally closed	
	NO	Normally open	

MMI	▪ [13] `Field IO`: ▪ `Main zone shut-off valve` ▪ `Add. zone shut-off valve` ▪ [6.4.22] `Main zone shut-off valve` (actuator status, read-only) ▪ [6.4.23] `Add. zone shut-off valve` (actuator status, read-only) For more information, see the application guidelines in the installer reference guide.

6.4.6 To connect the pumps (DHW pump and/or external pumps)

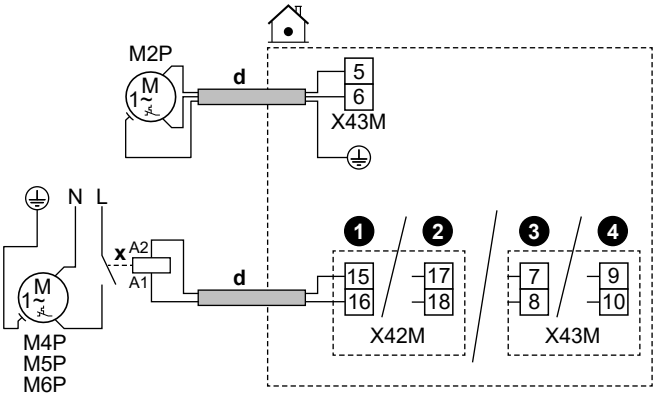

	d	▪ Follow cable route ⓓ→ in "6.4.1 To connect the electrical wiring to the indoor unit" [▸ 14]. ▪ Wires: (2+GND)×1 mm² ▪ This is a `Field IO` output connection. See "6.3 `Field IO` connections" [▸ 11].
	x	External relay
	M2P	DHW pump: ▪ Maximum load: 2 A (inrush), 230 V AC, 1 A (continuous)
	M4P	`C/H secondary pump` — Maximum load: 0.3 A, 230 V AC
	M5P	`C/H pump ext. main`
	M6P	`C/H pump ext. add.`
MMI	▪ [13] `Field IO` ▪ `DHW pump`: Pump used for instant hot water and/or disinfection operation. In this case you must also specify the functionality in setting [4.13] `DHW pump`: * `Instant hot water` * `Disinfection` * `Both` ▪ `C/H secondary pump`: Pump runs when there is a request from the main or additional zone. ▪ `C/H pump ext. main`: Pump runs when there is a request from the main zone. ▪ `C/H pump ext. add.`: Pump runs when there is a request from the additional zone. ▪ [4.26] `DHW pump schedule` ▪ [6.4.24] `C/H secondary pump` (actuator status, read-only) ▪ [6.4.25] `C/H pump ext. main` (actuator status, read-only) ▪ [6.4.26] `C/H pump ext. add.` (actuator status, read-only) For more information, see the application guidelines in the installer reference guide.	

6.4.7 To connect the alarm output

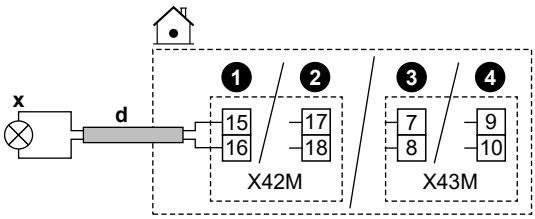

	d	▪ Follow cable route ⓓ→ in "6.4.1 To connect the electrical wiring to the indoor unit" [▸ 14]. ▪ Wires: 2×1 mm² ▪ This is a `Field IO` output connection. See "6.3 `Field IO` connections" [▸ 11].
	x	Alarm output: ▪ Maximum load: 0.3 A, 230 V AC
MMI	▪ [13] `Field IO (Alarm)`: If the type of malfunction is error, the alarm output will be triggered.	

6.4.8 To connect the space cooling/heating ON/OFF output

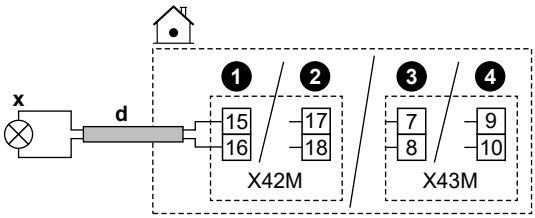

	d	▪ Follow cable route ⓓ→ in "6.4.1 To connect the electrical wiring to the indoor unit" [▸ 14]. ▪ Wires: 2×1 mm² ▪ This is a `Field IO` output connection. See "6.3 `Field IO` connections" [▸ 11].
	x	Space cooling/heating ON/OFF output: ▪ Maximum load: 0.3 A, 230 V AC
MMI	▪ [13] `Field IO (Cooling/Heating mode)`: This signal becomes active when the unit is actively running in space cooling. For more information, see the application guidelines in the installer reference guide.	

6.4.9 To connect the changeover to external heat source

INFORMATION

Bivalent is ONLY possible in case of ONE leaving water temperature zone with:

- room thermostat control, OR
- external room thermostat control.

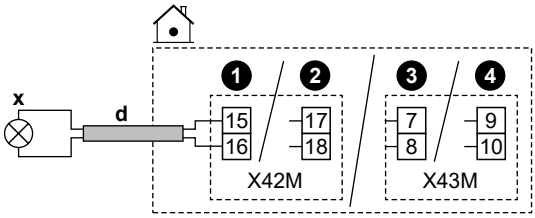

	d	▪ Follow cable route ⓓ→ in "6.4.1 To connect the electrical wiring to the indoor unit" [▸ 14]. ▪ Wires: 2×1 mm² ▪ This is a `Field IO` output connection. See "6.3 `Field IO` connections" [▸ 11].
	x	Changeover to external heat source: ▪ Maximum load: 0.3 A, 230 V AC
MMI		▪ [13] `Field IO` (`External heat source`): This signal will send an active request to activate the external heat source. ▪ [5.14] `Bivalent` ▪ [5.37] `Bivalent present` (ON) For more information, see the application guidelines in the installer reference guide.

6.4.10 To connect the bivalent bypass valve

NOTICE

Wiring is different for a NC (normally closed) valve and a NO (normally open) valve.

In case of normally closed bivalent bypass valves

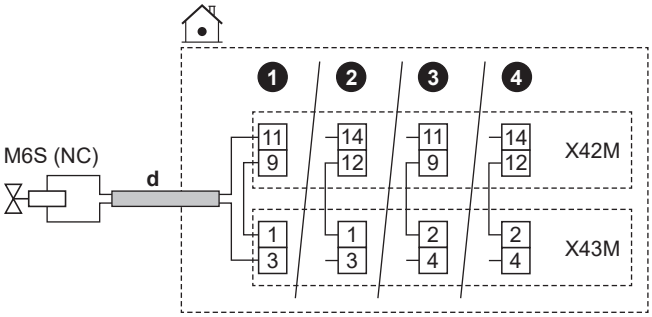

In case of normally open bivalent bypass valves

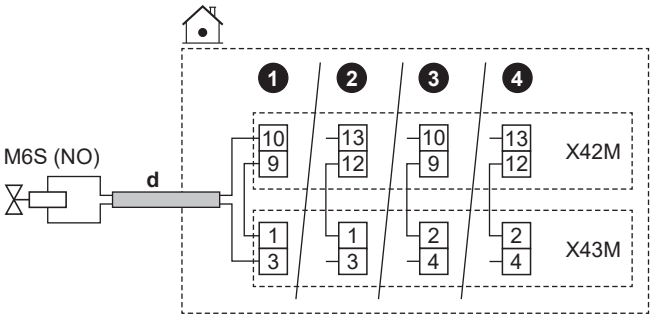

	d	▪ Follow cable route ⓓ→ in "6.4.1 To connect the electrical wiring to the indoor unit" [▸ 14]. ▪ Wires: (2 + bridge)×1 mm² ▪ This is a `Field IO` output connection. See "6.3 `Field IO` connections" [▸ 11].
	M6S	Bivalent bypass valve (activated when bivalent is active): ▪ Maximum load: 0.1 A, 230 V AC
	NC	Normally closed
	NO	Normally open
MMI		▪ [13] `Field IO` (`Bivalent bypass valve`) ▪ [5.14] `Bivalent` ▪ [5.37] `Bivalent present` (ON) ▪ [6.4.21] `Bivalent bypass valve` (actuator status, read-only): Valve that bypasses the flow when the auxiliary heat source pump is in operation. For more information, see the application guidelines in the installer reference guide.

6.4.11 To connect the decoupled bypass valve

NOTICE

Wiring is different for:

- NC (normally closed), 2-wire type valve
- NO (normally open), 2-wire type valve
- NO (normally open), 3-wire type valve

In case of normally closed, 2-wire type valve:

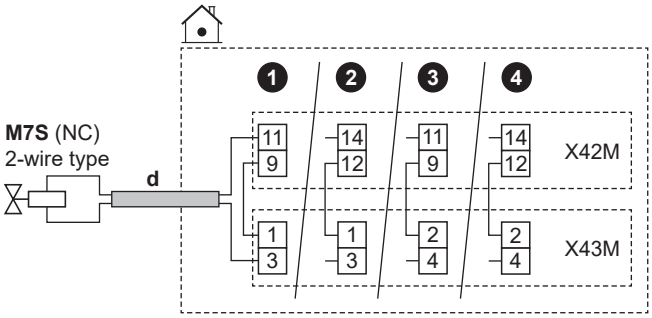

In case of normally open, 2-wire type valve:

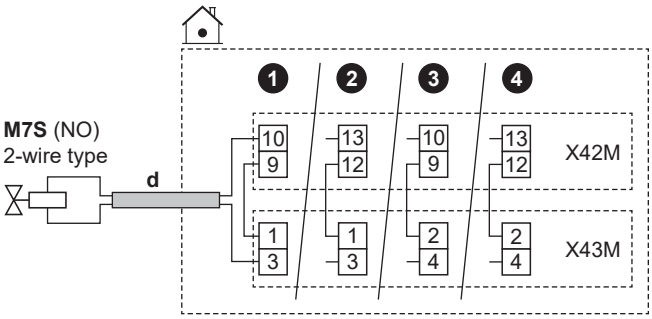

In case of normally open, 3-wire type valve:

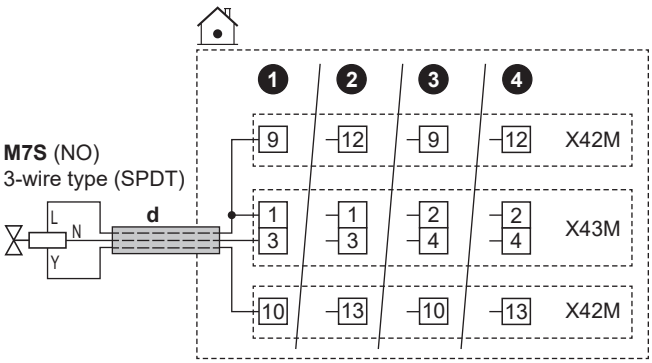

	d	▪ Follow cable route ⓓ→ in "6.4.1 To connect the electrical wiring to the indoor unit" [▸ 14]. ▪ Wires: (2 or 3 + bridge)×1 mm² ▪ This is a `Field IO` output connection. See "6.3 `Field IO` connections" [▸ 11].
	M7S	Decoupled bypass valve: ▪ Maximum load: 0.1 A, 230 V AC
	2-wire type	2-wire type
	3-wire type (SPDT)	3-wire type (SPDT)
	NC	Normally closed
	NO	Normally open
MMI		▪ [13] `Field IO` (`Decoupled bypass valve`) ▪ [3.10] `Hydraulically decoupled` (ON)

6.4.12 To connect the electricity meters

INFORMATION

This functionality is NOT available in early versions of the user interface software.

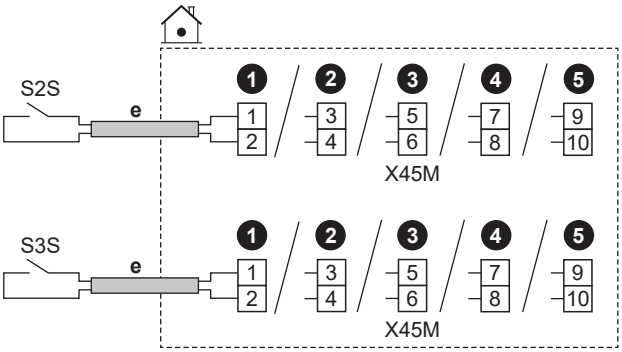

	e	▪ Follow cable route ⓔ→ in "6.4.1 To connect the electrical wiring to the indoor unit" [▸ 14]. ▪ Wires: 2 (per meter)×0.75 mm² ▪ This is a `Field IO` input connection. See "6.3 `Field IO` connections" [▸ 11].	
	S2S	Electricity meter 1	Contact rating: 16 V DC
	S3S	Electricity meter 2	
MMI			

6.4.13 To connect the safety thermostat

Connect a safety thermostat to the unit, to prevent that too high temperatures go to the respective zone.

Remark: In case of 2 LWT zones with a bizone kit, you need to connect a second safety thermostat (for the main zone) to the bizone kit control box (EKMIKPOA), to prevent that too high temperatures go to the main zone.

For more information about the safety thermostat for the main zone, see the application guidelines in the installer reference guide.

NOTICE

Make sure to select and install the safety thermostat according to the applicable legislation.

In any case, to prevent unnecessary tripping of the safety thermostat, we recommend the following:

- The safety thermostat is automatically resettable.
- The safety thermostat has a maximum temperature variation rate of 2°C/min.
- The safety thermostat tripping point should be selected in line with the overheating limit.
- There is a minimum distance of 2 m between the safety thermostat and the motorized 3-way valve delivered with the domestic hot water tank.

INFORMATION

The maximum leaving water temperature is decided based on setting [3.12] `Overheating setpoint`. This limit defines the maximum leaving water **in the system**. Depending on the value of this setting, the maximum LWT setpoint will also be reduced by 5°C to allow stable control towards the setpoint.

The maximum leaving water temperature **in the main zone** is decided based on setting [1.19] `Overheating water circuit`, only in case [3.13.5] `Bizone kit installed` is enabled. This limit defines the maximum leaving water **in the main zone**. Depending on the value of this setting, the maximum LWT setpoint will also be reduced by 5°C to allow stable control towards the setpoint.

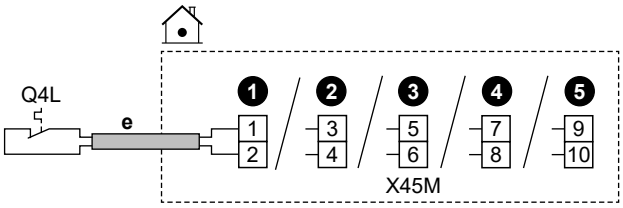

	e	▪ Follow cable route ⓔ→ in "6.4.1 To connect the electrical wiring to the indoor unit" [▸ 14]. ▪ Wires: 2×0.75 mm² ▪ Maximum length: 50 m ▪ This is a `Field IO` input connection. See "6.3 `Field IO` connections" [▸ 11].
	Q4L	Safety thermostat contact for the unit: ▪ Contact rating: 16 V DC
MMI	[13] `Field IO` (`Safety thermostat unit`)	

6.4.14 Smart Grid

INFORMATION

The Smart Grid photovoltaic power pulse meter (S4S) functionality is NOT available in early versions of the user interface software.

This topic describes different ways to connect the indoor unit to a Smart Grid:

Smart Grid contacts:

- In case of low voltage Smart Grid contacts.
- In case of high voltage Smart Grid contacts. This requires the installation of **2 relays** from the Smart Grid relay kit (EKRELSG).

The 2 incoming Smart Grid contacts can activate the following Smart Grid modes:

1	2	SG ready 1.0 operation mode
0	0	`Free running`
0	1	`Forced off`
1	0	`Recommended on`
1	1	`Forced on`
1	**2**	**SG ready 1.1 operation mode**
0	0	Operating state 2
0	1	Operating state 3
1	0	Operating state 1
1	1	

Smart Grid meter: ▪ In case of low voltage Smart Grid meter. ▪ In case of high voltage Smart Grid meter. This requires the installation of **1 relay** from the Smart Grid relay kit (EKRELSG).	If the Smart Grid meter is active, the heat pump and the additional electrical heat sources are allowed to operate if the limit allows it. **Note:** ▪ It is possible that in some cases this limit towards the heat pump will be ignored for reliability reasons (e.g. heat pump start-up and defrost). ▪ If the backup heater needs to support for protective reasons, the backup heater will kick in with at least a capacity of 2 kW (to ensure reliable operation) even if the power limit would be exceeded.

The related settings in case of **Smart Grid contacts** are as follows:

- [13] `Field IO`:
  - `HV/LV Smart Grid Contact 1`
  - `HV/LV Smart Grid Contact 2`
- [9.14] `Demand response`
- [9.14.1] `Operation mode` (`Smart grid ready contacts`)

The related settings in case of **Smart Grid meter** are as follows:

- [13] `Field IO` (`Smart Meter Contact`)
- [9.14.1] `Operation mode` (`Smart Meter Contact`)
- [9.14.7] `Smart meter limit`

Connections in case of low voltage Smart Grid contacts

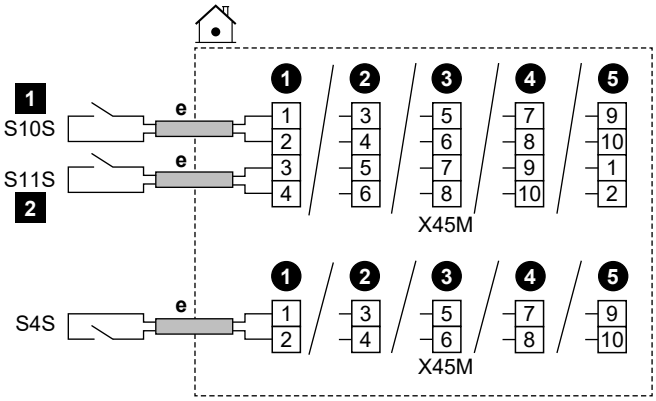

e	▪ Follow cable route ⓔ→ in "6.4.1 To connect the electrical wiring to the indoor unit" [▸ 14]. ▪ Wires: 0.75 mm² ▪ This is a `Field IO` input connection. See "6.3 `Field IO` connections" [▸ 11].	
S4S	Smart Grid photovoltaic power pulse meter: ▪ Contact rating: 16 V DC	
S10S / 1	Low voltage Smart Grid contact 1	Voltage: 16 V DC
S11S / 2	Low voltage Smart Grid contact 2	

Connections in case of high voltage Smart Grid contacts

1 Install 2 relays from the Smart Grid relay kit (EKRELSG) as follows:

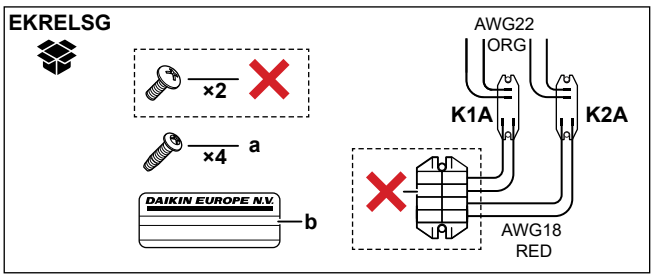

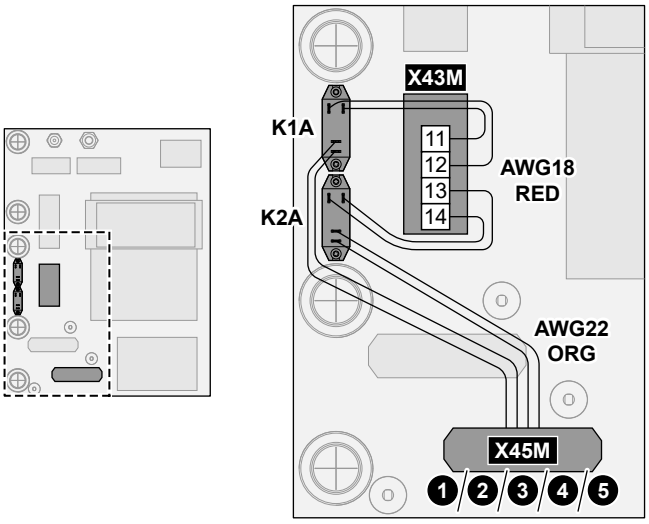

	a	Screws for K1A and K2A
	b	Sticker to put on the high voltage wires
	AWG22 ORG	Wires (AWG22 orange) coming from the contact sides of the relays; to be connected to X45M
	AWG18 RED	Wires (AWG18 red) coming from the coil sides of the relays; to be connected to X42M
	K1A, K2A	Relays
	✕	NOT needed

2 Connect as follows:

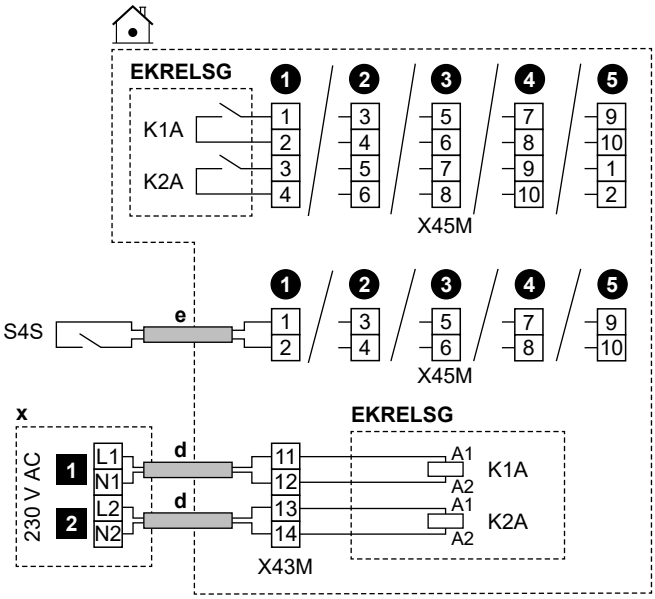

	d	▪ Follow cable route ⓓ→ in "6.4.1 To connect the electrical wiring to the indoor unit" [▸ 14]. ▪ Wires: 4×1 mm²
	e	▪ Follow cable route ⓔ→ in "6.4.1 To connect the electrical wiring to the indoor unit" [▸ 14]. ▪ Wires: 2×0.75 mm²
	x	230 V AC control device
	EKRELSG	Smart Grid relay kit This is a `Field IO` input connection. See "6.3 `Field IO` connections" [▸ 11].
	S4S	Smart Grid photovoltaic power pulse meter: ▪ Contact rating: 16 V DC This is a `Field IO` input connection. See "6.3 `Field IO` connections" [▸ 11].
	1	High voltage Smart Grid contact 1
	2	High voltage Smart Grid contact 2

Connections in case of low voltage Smart Grid meter

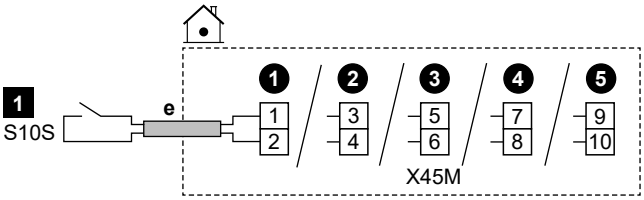

	e	▪ Follow cable route ⓔ→ in "6.4.1 To connect the electrical wiring to the indoor unit" [▸ 14]. ▪ Wires: 2×0.75 mm² ▪ This is a `Field IO` input connection. See "6.3 `Field IO` connections" [▸ 11].
	S10S / 1	Low voltage Smart Grid meter: ▪ Voltage: 16 V DC

Connections in case of high voltage Smart Grid meter

1 Install 1 relay (K1A) from the Smart Grid relay kit (EKRELSG). (see above: Connections in case of high voltage Smart Grid contacts).

2 Connect as follows:

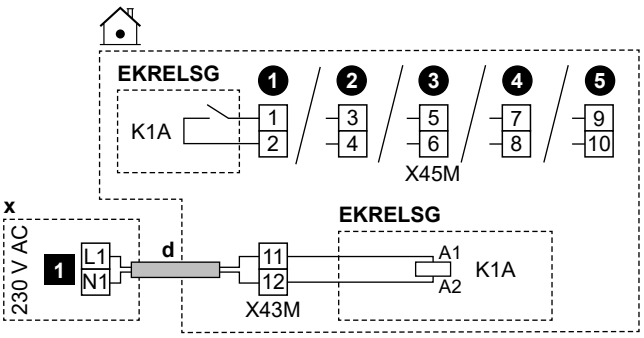

	d	▪ Follow cable route ⓓ→ in "6.4.1 To connect the electrical wiring to the indoor unit" [▸ 14]. ▪ Wires: 2×1 mm²
	x	230 V AC control device
	EKRELSG	Smart Grid relay kit This is a `Field IO` input connection. See "6.3 `Field IO` connections" [▸ 11].
	1	High voltage Smart Grid meter

6.4.15 To connect the WLAN cartridge (delivered as accessory)

MMI	[8.3] `Wireless gateway`

1 Insert the WLAN cartridge into the cartridge slot on the user interface of the indoor unit.

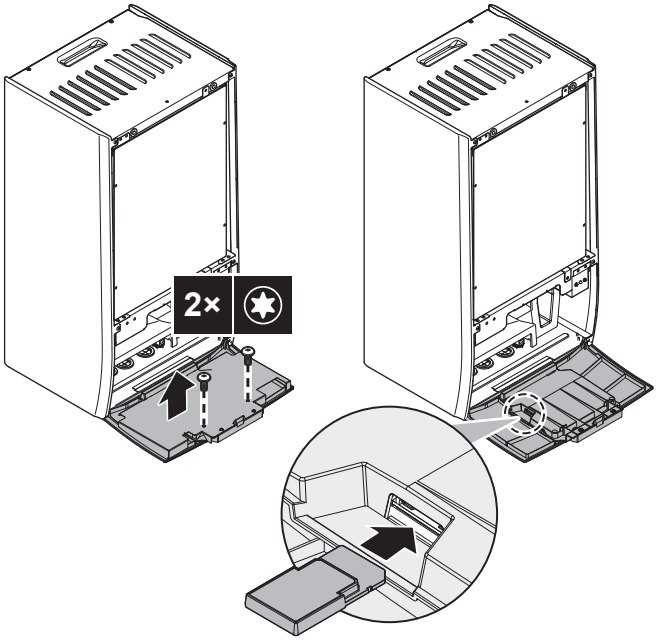

6.4.16 To connect the Ethernet cable (Modbus / LAN)

	Use minimum Cat 6a Ethernet cable with the following features: ▪ U/UTP (= unshielded) ▪ Connector: RJ45 male to RJ45 male **Note:** ▪ It is recommended that the cable includes (moulded) strain relief to prevent damage in tight routing spaces. ▪ Maximum cable length: 100 m.

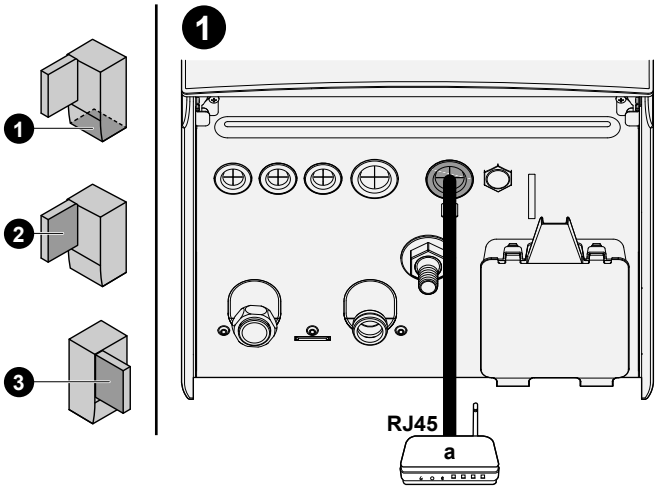

a Home router

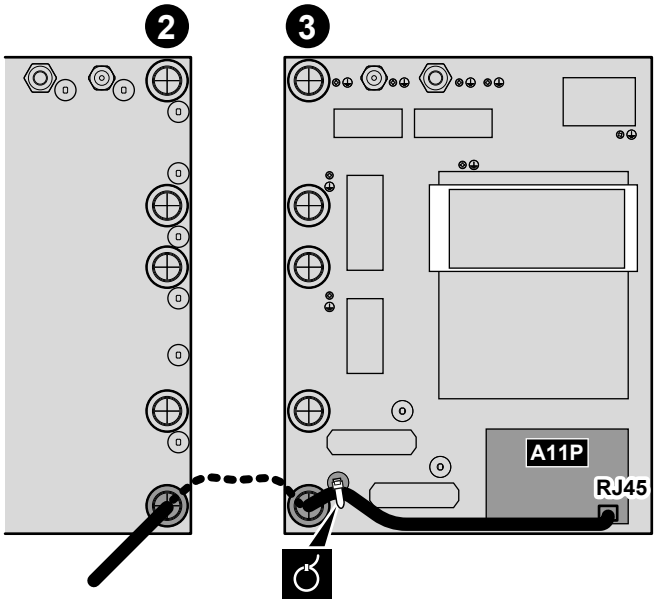

Ferrite cores

In case of EPBX(U)10+14: Put the ferrite cores (TRM-31-20-15E-WE and GRFC-10 delivered as accessory) on the Ethernet cable as shown, as close to the RJ45 connector as possible.

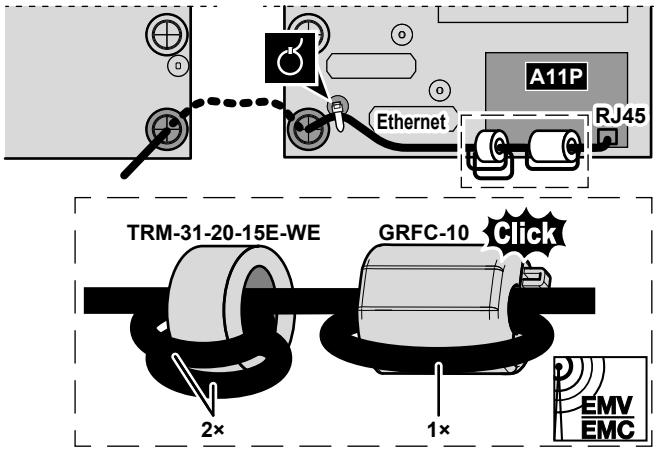

6.4.17 To connect the solar input

Restriction: Only possible in case of standalone tank EKHWP. For the hydraulic connection of the tank, see the EKHWP installation manual.

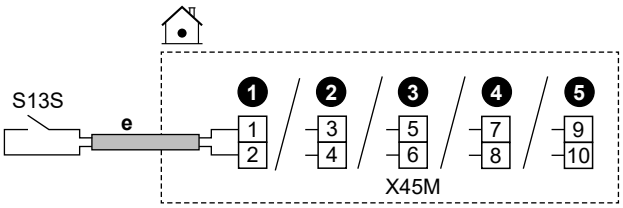

	e	▪ Follow cable route ⓔ→ in "6.4.1 To connect the electrical wiring to the indoor unit" [▸ 14]. ▪ Wires: 2x0.75 mm² ▪ This is a `Field IO` input connection. See "6.3 `Field IO` connections" [▸ 11].
	S13S	Solar input contact: ▪ Contact rating: 16 V DC
MMI		▪ [13] `Field IO` (`Solar input`) ▪ [6.3.26] `Solar input` (sensor status (ON/OFF), read-only)

7 Configuration

This chapter explains only basic configuration done via the configuration wizard. For more detailed explanation and background information, see the configuration reference guide.

User mode vs. Installer mode

On the home screen, and most other screens where applicable, you can toggle between user mode and installer mode.

	User mode
	Installer mode. Pin code: 5678

Menu structure vs. Overview field settings

You can access the installer settings using two different methods. However, NOT all settings are accessible via both methods.

Via the menu structure (with breadcrumbs):

1 From the home screen, use the navigation buttons 〈 ⌂ ∘ ∘ 〉.

2 Go to any of the menus:

[1] `Main zone`	[8] `Connectivity`
[2] `Additional zone`	[9] `Energy`
[3] `Heating/cooling`	[10] `Configuration wizard`
[4] `Domestic hot water`	[11] `Malfunctioning`
[5] `Settings`	[12] NOT USED
[6] `Information`	[13] `Field IO`
[7] `Maintenance mode`	

Via the overview of the field settings:

1 Go to [5.7]: `Settings` > `Overview field settings`.

2 Go to the wanted field setting. Where applicable, the field setting codes are described in the configuration reference guide. **Example:** Go to **005** for the water pipe freeze prevention function. Field codes that are not applicable are greyed out.

3 Select the wanted value.

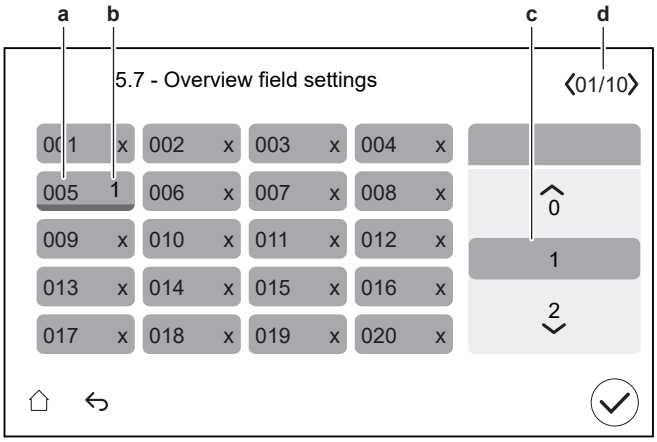

a Field setting code
b Selected value
c To select the wanted value
d To browse through the different pages

7.1 Configuration wizard

After first power ON of the system, the user interface starts a configuration wizard. Use this wizard to set the most important initial settings for the unit to run properly.

- If needed, you can restart the configuration wizard via the menu structure: [10] `Configuration wizard`.
- If needed, you can afterwards configure more settings via the menu structure.

Configuration wizard – Overview

Depending on your unit type and the selected settings, some steps will not be visible (**Note:** [10.2] is not used).

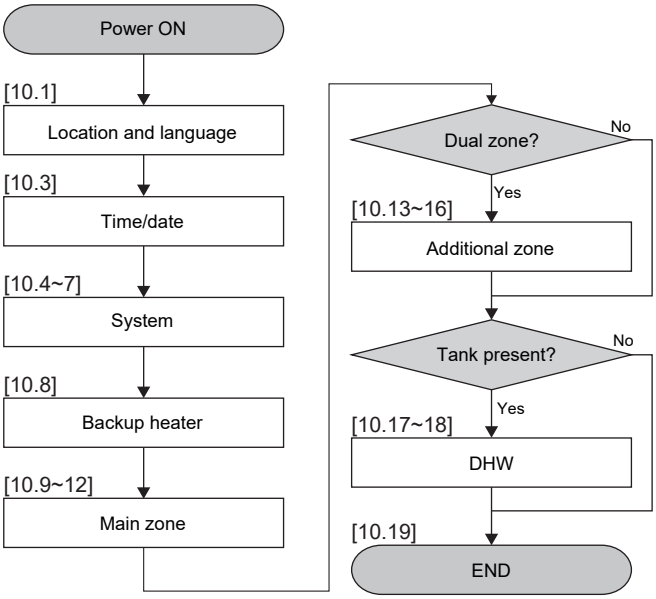

After you completed all steps in the wizard, the user interface will show an error message instructing to enter the Digital Key (i.e. perform the unlocking procedure). See "8.2.1 To unlock the outdoor unit (compressor)" [▶ 33].

[10.1] `Location and language`

Set:

- `Country`
- `Language`

  Note: The default `Language` is indicated with a white circle at the left side of the selector.

[10.2] NOT USED

[10.3] `Time/date`

Set:

- Date
- Clock format (24 hours or AM/PM)
- Time
- `Daylight savings time` (ON/OFF)

[10.4] `System 1/4`

Set:

- `Number of zones`
- `Bivalent`
- `DHW Tank`
- `DHW Tank type`

Number of zones

The system can supply leaving water to up to 2 water temperature zones. During configuration, the number of water zones must be set.

- `Single zone`

  Only one leaving water temperature zone.

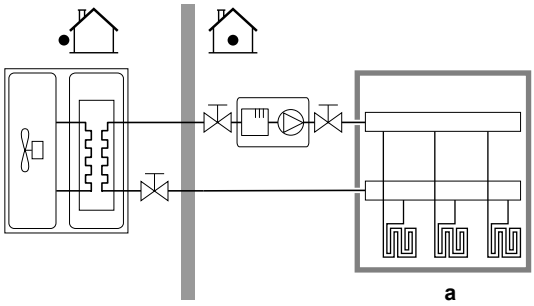

a Main LWT zone

- `Dual zone`

  Two leaving water temperature zones. In heating, the main leaving water temperature zone consists of the lowest temperature heat emitters and a mixing station to achieve the desired leaving water temperature.

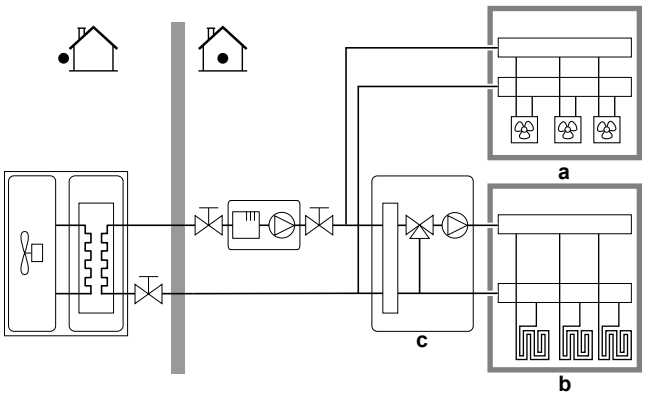

a Additional LWT zone: Highest temperature

b Main LWT zone: Lowest temperature

c Mixing station

INFORMATION

Mixing station. If your system layout contains 2 LWT zones, you can install a mixing station in front of the main LWT zone. However, other dual zone applications with shut-off valves are also possible. For more information, see the application guidelines in the installer reference guide.

NOTICE

NOT configuring the system in the following way can cause damage to the heat emitters. If there are 2 zones, it is important that in heating:

- the zone with the lowest water temperature is configured as the main zone, and
- the zone with the highest water temperature is configured as the additional zone.

NOTICE

If there are 2 zones and the emitter types are wrongly configured, water of high temperature can be sent towards a low temperature emitter (underfloor heating). To avoid this:

- Install an aquastat/thermostatic valve to avoid too high temperatures towards a low temperature emitter.
- Make sure you set the emitter types for the main zone and for the additional zone correctly in accordance with the connected emitter.

Bivalent

Must match your system layout. Is an external heat source (bivalent) installed? For more information, see the application guidelines in the installer reference guide, and the settings in the configuration reference guide ([5.14] `Bivalent`).
ON (installed) / OFF (not installed)

DHW Tank

Must match your system layout. DHW tank installed?
ON (installed) / OFF (not installed)

DHW Tank type

Must match your system layout. DHW tank type. You can set the maximum temperature for the tank with setting [4.11].
▪ `EKHWS/E 150l` (EKHWS/E 150 l) Tank with booster heater installed at side of the tank with a volume of 150 l. Maximum temperature 60°C. ▪ `EKHWS/E 180l` (EKHWS/E 180 l) Tank with booster heater installed at side of the tank with a volume of 180 l. Maximum temperature 60°C. ▪ `EKHWS/E 200l` (EKHWS/E 200 l) Tank with booster heater installed at side of the tank with a volume of 200 l. Maximum temperature 75°C. ▪ `EKHWS/E 250l` (EKHWS/E 250 l) Tank with booster heater installed at side of the tank with a volume of 250 l. Maximum temperature 75°C. ▪ `EKHWS/E 300l` (EKHWS/E 300 l) Tank with booster heater installed at side of the tank with a volume of 300 l. Maximum temperature 75°C. ▪ `EKHWP/HYC with BSH` (EKHWP/HYC with booster heater) Tank with booster heater installed at top. Maximum temperature 80°C. ▪ `3rd party small coil` Third-party tank with a coil size larger than 1.05 m². Maximum temperature 60°C. ▪ `3rd party big coil` Third-party tank with a coil size larger than 1.80 m². Maximum temperature 75°C.

[10.5] System 2/4

Set:

- `3-Way Valve`: choose between the standard `Field IO` possibilities.

  Note: Only shown when in step [10.4] `System 1/4`, `DHW Tank` is set to ON.
- `Bivalent bypass valve`: choose between the standard `Field IO` possibilities.

  Note: Only shown when in step [10.4] `System 1/4`, `Bivalent` is set to ON.

For the electrical connection of the:

- `Bivalent bypass valve`, see "6.4.10 To connect the bivalent bypass valve" [▶ 20].
- `3-Way Valve`, see installation manual of the 3-way valve and the addendum book for optional equipment.

[10.6] System 3/4

Not applicable.

[10.7] System 4/4

Set `Emergency selection`.

Emergency selection

When a heat pump failure occurs, then this setting (same as setting [5.23]) defines whether other heat sources can take over the space heating and DHW operation.

When there is no automatic full take-over by other heat sources, a pop-up (with the same content as setting [5.30]) appears where you can manually acknowledge that other heat sources can fully take over (i.e. space heating to normal setpoint and DHW operation = ON).

When the house is unattended for longer periods, we recommend to use `auto SH reduced/DHW off` to keep energy consumption low.

[5.23]	When heat pump failure occurs, then there is … by other heat sources	Full take-over
`Manual`	No take-over: ▪ Space heating = OFF ▪ DHW operation = OFF	After manual acknowledgment
`Automatic`	Full take-over: ▪ Space heating to normal setpoint ▪ DHW operation = ON	Automatic
`auto SH reduced/DHW on`	Partial take-over: ▪ Space heating to reduced setpoint ▪ DHW operation = ON	After manual acknowledgment
`auto SH reduced/DHW off`	Partial take-over: ▪ Space heating to reduced setpoint ▪ DHW operation = OFF	After manual acknowledgment
`auto SH normal/DHW off`	Partial take-over: ▪ Space heating to normal setpoint ▪ DHW operation = OFF	After manual acknowledgment

NOTICE

Maintenance mode / Emergency acknowledgement. Maintenance mode is intended for installers and service technicians. When entering maintenance mode, it is assumed that the installer is already aware of any active errors or system issues. Consequently, the system does NOT display any emergency acknowledgement pop-ups while maintenance mode is active. After exiting maintenance mode, if applicable, emergency acknowledgement pop-ups will be displayed. If it was already acknowledged before entering maintenance mode, no additional acknowledgement is necessary.

INFORMATION

If a heat pump failure occurs and `Emergency selection` is NOT set to `Automatic`, the following functions will remain active even if the user does NOT acknowledge emergency operation:

- Room frost protection
- Underfloor heating screed dryout
- Water pipe freeze prevention
- Disinfection

INFORMATION

When other heat sources take over the heat load from the heat pump, energy consumption might be considerably higher.

[10.8] `Backup heater`

Set:

- `Grid configuration`:
  - `Single phase`
  - `Three phase 3x400V+N`
  - `Three phase 3x230V`
- `Maximum capacity`:
  - Slider limited depending on grid configuration and fuse. **Note:** During defrost operation, the backup heater support may go up to the maximum capacity defined here. If needed, you can limit this value (but not lower than 2 kW to ensure reliable operation).
- `Fuse >10A` (ON/OFF)

The maximum capacity suggested by the user interface is based on the selected grid configuration and, if applicable, the size of the fuse. An installer can however lower the maximum capacity of the backup heater using the scroll list. The table below gives an overview of the dynamic maximums of the scroll list.

Grid configuration	Fuse >10A	Maximum capacity	
		4V models	9W models
Single phase	(greyed out)	Limited to 4.5 kW[(a)]	Limited to 6 kW[(a)]
Three phase 3x400V+N	OFF		Limited to 4 kW[(a)]
	ON		Limited to 9 kW[(a)]
Three phase 3x230V	(greyed out)		Limited to 4 kW[(a)]

[(a)] But not lower than 2 kW.

[10.9] `Main zone 1/4`

Set:

- `Emitter type`
- `Control`

Emitter type

Must match your system layout. Emitter type of the main zone.
▪ `Under floor heating` ▪ `Heat pump convector` ▪ `Radiator`

The setting `Emitter type` influences the target delta T in heating as follows:

Emitter type Main zone	Target delta T in heating
Under floor heating	3~10°C
Heat pump convector	3~10°C
Radiator	3~20°C

Heating up or cooling down the main zone can take longer. This depends on:

- The water volume of the system
- The heater emitter type of the main zone

NOTICE

Average emitter temperature = Leaving water temperature – (Delta T)/2

This means that for a same leaving water temperature setpoint, the average emitter temperature of radiators is lower than that of underfloor heating because of a bigger delta T.

Example radiators: 40–10/2=**35°C**

Example underfloor heating: 40–5/2=**37.5°C**

To compensate, you can increase the weather-dependent curve desired temperatures.

INFORMATION

The maximum leaving water temperature is decided based on setting [3.12] `Overheating setpoint`. This limit defines the maximum leaving water **in the system**. Depending on the value of this setting, the maximum LWT setpoint will also be reduced by 5°C to allow stable control towards the setpoint.

The maximum leaving water temperature **in the main zone** is decided based on setting [1.19] `Overheating water circuit`, only in case [3.13.5] `Bizone kit installed` is enabled. This limit defines the maximum leaving water **in the main zone**. Depending on the value of this setting, the maximum LWT setpoint will also be reduced by 5°C to allow stable control towards the setpoint.

Control

Defines the unit control method for the main zone.
▪ `Leaving water`: Unit operation is decided based on the leaving water temperature regardless the actual room temperature and/or heating or cooling demand of the room. ▪ `External room thermostat`: Unit operation is decided by the external thermostat or equivalent (e.g. heat pump convector). ▪ `Room thermostat`: Unit operation is decided based on the ambient temperature of the dedicated Human Comfort Interface (BRC1HHDA used as room thermostat).

In case of external room thermostat control, you must also set [1.13] `External room thermostat` (`Input source` and `Connection type`):

`Input source`:

Must match your system layout. Input source of the external room thermostat for the main zone.
▪ `Hardware`: For external room thermostat connected to the unit. ▪ `External`: For Cloud and Modbus.

`Connection type`:

Restriction: Only applicable if [1.13] `Input source` = `Hardware`. Must match your system layout. External room thermostat type for the main zone.
▪ `Single contact`: The used external room thermostat can only send a thermo ON/OFF condition. There is no separation between heating or cooling demand. Select this value in case of a connection to the heat pump convector (FWX*). ▪ `Dual contact`: The used external room thermostat can send a separate heating/cooling thermo ON/OFF condition. Select this value in case of connection to multi-zoning wired controls, wired room thermostats (EKRTWA) or wireless room thermostats (EKRTRB).

NOTICE

If an external room thermostat is used, the external room thermostat will control the room frost protection.

[10.10] `Main zone 2/4`

Set:

- `Heating setpoint mode`:
  - `Fixed`
  - `Weather dependent`
- `Cooling setpoint mode`:
  - `Fixed`
  - `Weather dependent`

[10.11] `Main zone 3/4 (Heating WD curve)`

Defines the weather-dependent curve used to determine the leaving water temperature of the main zone in space heating operation.

Restriction: The curve is only used when `Heating setpoint mode` (main zone) = `Weather dependent`.

See "7.2 Weather-dependent curve" [▸ 29].

[10.12] `Main zone 4/4 (Cooling WD curve)`

Defines the weather-dependent curve used to determine the leaving water temperature of the main zone in space cooling operation.

Restriction: The curve is only used when `Cooling setpoint mode` (main zone) = `Weather dependent`.

See "7.2 Weather-dependent curve" [▸ 29].

[10.13] `Additional zone 1/4`

Set:

- `Emitter type`
- `Control`

Emitter type

Must match your system layout. Emitter type of the additional zone. For more information, see " [10.9] `Main zone 1/4`" [▸ 27].
▪ `Under floor heating` ▪ `Heat pump convector` ▪ `Radiator`

Control

Shows (read-only) the unit control method for the additional zone. It is determined by the unit control method for the main zone (see " [10.9] `Main zone 1/4`" [▸ 27]).

▪ `Leaving water` if the unit control method for the main zone is `Leaving water`.
▪ `External room thermostat` if the unit control method for the main zone is:
  ▪ `External room thermostat`, or
  ▪ `Room thermostat`

In case of external room thermostat control, you must also set [2.13] `External room thermostat` (`Input source` and `Connection type`):

`Input source`:

Must match your system layout. Input source of the external room thermostat for the additional zone.
▪ `Hardware`: For external room thermostat connected to the unit. ▪ `External`: For Cloud and Modbus.

`Connection type`:

Restriction: Only applicable if [2.13] `Input source` = `Hardware`. Must match your system layout. External room thermostat type for the additional zone.
▪ `Single contact`: The used external room thermostat can only send a thermo ON/OFF condition. There is no separation between heating or cooling demand. Select this value in case of a connection to the heat pump convector (FWX*). ▪ `Dual contact`: The used external room thermostat can send a separate heating/cooling thermo ON/OFF condition. Select this value in case of connection to multi-zoning wired controls, wired room thermostats (EKRTWA) or wireless room thermostats (EKRTRB).

[10.14] `Additional zone 2/4`

Set:

- `Heating setpoint mode`:
  - `Fixed`
  - `Weather dependent`
- `Cooling setpoint mode`:
  - `Fixed`
  - `Weather dependent`

[10.15] `Additional zone 3/4 (Heating WD curve)`

Defines the weather-dependent curve used to determine the leaving water temperature of the additional zone in space heating operation.

Restriction: The curve is only used when `Heating setpoint mode` (additional zone) = `Weather dependent`.

See "7.2 Weather-dependent curve" [▸ 29].

[10.16] `Additional zone 4/4 (Cooling WD curve)`

Defines the weather-dependent curve used to determine the leaving water temperature of the additional zone in space cooling operation.

Restriction: The curve is only used when `Cooling setpoint mode` (additional zone) = `Weather dependent`.

See "7.2 Weather-dependent curve" [▸ 29].

[10.17] `Configuration wizard – DHW 1/2`

Set:

- `Operation mode`

Operation mode

Defines how the domestic hot water is prepared. The 3 different ways differ from each other by the way the desired tank temperature is set and how the unit acts upon it.
▪ `Reheat`: The tank can ONLY be heated by reheat operation. ▪ `Schedule and reheat`: The tank is heated according to a schedule and between the scheduled heat up cycles, reheat operation is allowed. ▪ `Scheduled`: The tank can ONLY be heated according to a schedule. For more information about the domestic hot water control, see the configuration reference guide.

INFORMATION

In case of wall-mounted units with standalone tank without internal booster heater:

There is a risk of space heating capacity shortage in case of frequent domestic hot water operation. Frequent and long space heating/cooling interruption will happen when selecting `Operation mode = Reheat` (only reheat operation allowed for the tank).

[10.18] `Configuration wizard – DHW 2/2`

Set:

- `Tank setpoint` (select value)
- `Hysteresis` (select value)

[10.19] `Configuration wizard`

`The configuration wizard is finished!`

`Please make sure that the commissioning check list in e-Care has been completed as well.`

7.2 Weather-dependent curve

7.2.1 What is a weather-dependent curve?

Weather-dependent operation

The unit operates 'weather-dependent' if the desired leaving water temperature is determined automatically by the outdoor temperature. It therefore is connected to a temperature sensor on the north wall of the building. If the outdoor temperature drops or rises, the unit compensates instantly. Thus, the unit does not have to wait for feedback by the thermostat to increase or decrease the temperature of the leaving water. Because it reacts more quickly, it prevents high rises and drops of the indoor temperature and water temperature at tap points.

Advantage

Weather-dependent operation reduces energy consumption.

Weather-dependent curve

To be able to compensate for differences in temperature, the unit relies on its weather-dependent curve. This curve defines how much the temperature of the leaving water must be at different outdoor temperatures. Because the slope of the curve depends on local circumstances such as climate and the insulation of the building, the curve can be adjusted by an installer or user.

Type of weather-dependent curve

The type of weather-dependent curve is "2-points curve".

Availability

The weather-dependent curve is available for:

- Main zone - Heating
- Main zone - Cooling
- Additional zone - Heating
- Additional zone - Cooling

7.2.2 Using weather-dependent curves

Related screens

The following table describes:

- Where you can define the different weather-dependent curves
- When the curve is used (restriction)

To define the curve, go to…	Curve is used when…
[1.8] `Main zone` > `Heating WD curve`	[1.5] `Heating setpoint mode = Weather dependent`
[1.9] `Main zone` > `Cooling WD curve`	[1.7] `Cooling setpoint mode = Weather dependent`
[2.8] `Additional zone` > `Heating WD curve`	[2.5] `Heating setpoint mode = Weather dependent`
[2.9] `Additional zone` > `Cooling WD curve`	[2.7] `Cooling setpoint mode = Weather dependent`

INFORMATION

Maximum and minimum setpoints

You cannot configure the curve with temperatures that are higher or lower than the set maximum and minimum setpoints for that zone. When the maximum or minimum setpoint is reached, the curve flattens out.

To define a weather-dependent curve

Define the weather-dependent curve using two setpoints (**b, c**). **Example:**

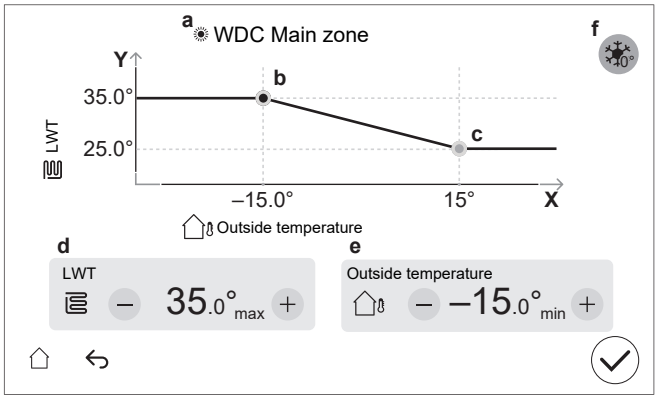

Item	Description
a	Selected weather-dependent curve: ▪ [1.8] Main zone – Heating ( ) ▪ [1.9] Main zone – Cooling ( ) ▪ [2.8] Additional zone – Heating ( ) ▪ [2.9] Additional zone – Cooling ( )
b, c	Setpoint 1 and setpoint 2. You can change them: ▪ By dragging the setpoint. ▪ By tapping the setpoint, and then using the – / + buttons in **d, e**.
d, e	Values of the selected setpoint. You can change the values using the – / + buttons.

Item	Description
f	**Restriction:** Only shown if an increase was already selected via [1.26] for main zone, or [2.20] for additional zone. `Increase around 0°C` (same as setting [1.26] for main zone, and [2.20] for additional zone). Use this setting to compensate for possible heat losses of the building due to the evaporation of melted ice or snow. (e.g. in cold region countries). In heating operation, the desired leaving water temperature is locally increased around an outdoor temperature of 0°C. 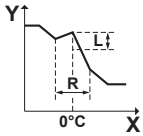 **L**: Increase; **R**: Span; **X**: Outdoor temperature; **Y**: Leaving water temperature Possible values: ▪ No ▪ `increase 2°C, span 4°C` ▪ `increase 2°C, span 8°C` ▪ `increase 4°C, span 4°C` ▪ `increase 4°C, span 8°C`
X-axis	Outdoor temperature.
Y-axis	Leaving water temperature for the selected zone. The icon corresponds to the heat emitter for that zone: ▪ : Underfloor heating ▪ : Heat pump convector ▪ : Radiator

To fine-tune a weather-dependent curve

The following table describes how to fine-tune the weather-dependent curve of a zone:

You feel…		Fine-tune with setpoints:			
At regular outdoor temperatures …	At cold outdoor temperatures …	Setpoint 1 (b)		Setpoint 2 (c)	
		X	Y	X	Y
OK	Cold	↑	↑	—	—
OK	Hot	↓	↓	—	—
Cold	OK	—	—	↑	↑
Cold	Cold	↑	↑	↑	↑
Cold	Hot	↓	↓	↑	↑
Hot	OK	—	—	↓	↓
Hot	Cold	↑	↑	↓	↓
Hot	Hot	↓	↓	↓	↓

7.3 Menu structure: Overview installer settings

NOTICE

When changing some settings, the operation can be temporarily stopped. Operations will restart when you return to the home screen.

Depending on your unit type and the selected settings, some settings will not be visible.

[1] Main zone

- [1.6] `Setpoint range: Heating`
- [1.12] `Control`
- [1.13] `External room thermostat`
- [1.14] `Delta T heating`
- [1.16] `Cooling allowance`
- [1.18] `Delta T cooling`
- [1.19] `Overheating water circuit`
- [1.20] `Undercooling water circuit`
- [1.26] `Increase around 0°C`
- [1.31] `Daikin room thermostat`
- [1.43] `Setpoint range: Cooling`

[2] Additional zone

- [2.6] `Setpoint range: Heating`
- [2.12] `Control`
- [2.13] `External room thermostat`
- [2.14] `Delta T heating`
- [2.17] `Delta T cooling`
- [2.20] `Increase around 0°C`
- [2.33] `Cooling allowance`
- [2.37] `Setpoint range: Cooling`

[3] Heating/cooling

- [3.6] `Additional zone`
- [3.7] `Max. heating overshoot LWT`
- [3.8] `Averaging time`
- [3.9] `Max. cooling undershoot LWT`
- [3.10] `Hydraulically decoupled`
- [3.11] `Undercooling setpoint`
- [3.12] `Overheating setpoint`
- [3.13] `Bizone kit`
- [3.14] `Room thermostat present`
- [3.15] `Heatpump minimum on time`
- [3.17] `Continuous pump when request`

[4] Domestic hot water

- [4.10] `Disinfection`
- [4.11] `Operation range`
- [4.13] `DHW pump`
- [4.14] `Booster heater`
- [4.18] `Disinfection enable`
- [4.20] `Add. source delay timer`
- [4.23] `Offset BSH setpoint`

[5] Settings

- [5.1] `Forced defrost`
- [5.2] `Quiet operation`
- [5.5] `Backup heater`
- [5.7] `Overview field settings`
- [5.11] `Reset fan operation hours`
- [5.14] `Bivalent settings`
- [5.18] `System restart`
- [5.22] `External ambient sensor offset`
- [5.28] `Balancing`
- [5.29] `Refrigerant recovery mode`
- [5.36] `Water pipe freeze prevention`
- [5.37] `Bivalent present`

[7] Maintenance mode

- [7.1] `Actuator test run`
- [7.2] `Air purge`
- [7.3] `Operation test run`
- [7.4] `UFH screed dryout`
- [7.7] `Operation test run settings`
- [7.8] `Malfunctioning`

[8] Connectivity

- [8.6] `Safe removal USB drive`
- [8.11] `Cloud connection type`

[9] Energy

- [9.11] `Boiler efficiency`
- [9.12] `PE factor`
- [9.14] `Demand response`
- [9.15] `System limitations`

[10] Configuration wizard

See "7.1 `Configuration wizard`" [▶ 25].

[11] Malfunctioning

[13] Field IO

See "6.3 `Field IO` connections" [▶ 11].

8 Commissioning

NOTICE

Commissioning checklists. Make sure to complete the different commissioning checklists:

- In the installation manuals (outdoor unit and indoor unit) or in the installer reference guide
- In the Daikin e-Care app

NOTICE

First operation. The first time the unit starts in heating or domestic hot water operation, the unit will shortly start up in cooling operation to guarantee the reliability of the heat pump:

- For this reason, the backup heater will increase the water temperature so that the unit does not freeze up. Depending on the water volume of the system, this can take up to a few hours. It is required to start the first time in space heating or space cooling operation (not domestic hot water operation) to limit the backup heater consumption. If you would run in domestic hot water operation for the first time, the backup heater consumption would be expected to be larger.
- Error 89-10 can occur if the unit is installed during days with large temperature variations. To reduce the risk of error 89-10 occurring, it is beneficial to wait a few hours after unlocking the unit and opening the stop valve of the outdoor unit's refrigerant vessel, and before the first start-up of the unit. If error 89-10 still occurs, the unit will shortly stop operation and then resume. The unit will continue operation, but it will take more time until the unit switches from cooling to heating.

NOTICE

If the outdoor temperature is below 18°C, error 89-10 may occur when starting in cooling mode. Change the operating mode to heating, and repeat the process

NOTICE

ALWAYS operate the unit with thermistors and/or pressure sensors/switches. If NOT, burning of the compressor might be the result.

WARNING

After commissioning, do NOT turn OFF the circuit breakers (**c**) to the units so that the protection remains activated. In case of normal kWh rate power supply (**a**), there is one circuit breaker. In case of preferential kWh rate power supply (**b**), there are two.

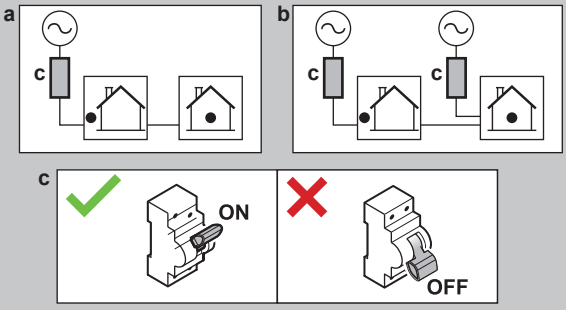

NOTICE

Anti-blockage safety routine – Pumps and valves:

The following pumps and valves are equipped with an anti-blockage safety routine. This means that when the component is inactive (in case of pumps), closed (in case of shut-off valves) or at standstill (in case of bizone kit mixing valve) for 24 h, then the component will operate for a short period of time to ensure it does not get stuck.

- `Unit pump`
- `C/H secondary pump`
- `C/H pump ext. main`
- `C/H pump ext. add.`
- `Main zone shut-off valve`
- `Add. zone shut-off valve`
- `Bizone kit mixing valve`
- `Bizone kit direct pump`
- `Bizone kit mixed pump`

Note:

- To enable these anti-blockage safety routines, the unit must be connected to the power supply all year round.
- During maintenance mode the anti-blockage safety routine does not run.
- When an anti-blockage safety routine is initiated for one component (pump or shut-off valve) in a specific zone, the other component in that zone, if installed, will also be deblocked. **Example:** If the pump of the main zone is being deblocked, the shut-off valve of that zone will also be deblocked.

NOTICE

Fully flushed. Make sure that the system / field piping is fully flushed before commissioning, so that potential contaminants are removed.

Reason: When performing an air purge, contaminants (i.e. sludge and microbiological organisms that create biofilm and gases) can lead to unintended activation of the indoor unit gas sensor. This generates error A0-02, and automatically stops the unit. Error A0-02 can only be cleared by trained installers with the required competences, as the procedure includes the generation of a Digital Key.

NOTICE

If automatic air purge valves are installed in the field piping:

- Between the outdoor unit and the indoor unit (on the entering water pipe of the indoor unit), they must be closed after commissioning.
- After the indoor unit (on the emitter side), they may remain open after commissioning.

NOTICE

For houses with a similar heat load as the declared heating capacity on the energy label, it is recommended to set the [5.6.1] `Capacity shortage activation` to 2 (`Shortage with equilibrium`) and decrease the equilibrium setpoint [5.6.2] `Equilibrium setpoint` to the declared bivalent temperature of -10°C. (refer to product fiche in accessory bag or the online energy label database (see: https://daikintechnicaldatahub.eu/)).

NOTICE

To avoid ON/OFF behaviour of the unit it is recommended to not oversize the unit. Refer to the declared heating capacity on the energy label or the online energy label database: https://daikintechnicaldatahub.eu/.

INFORMATION

When the unit is powered ON, it will take 5 minutes for the unit to initialize. During this time the shut-off valve inlet leak stop remains closed so domestic hot water operation cannot start.

INFORMATION

Protective functions – "Maintenance mode". The software is equipped with protective functions. The unit automatically runs these functions when necessary.

Protective functions: [3.4] `Antifrost`, [5.36] `Water pipe freeze prevention` and [4.18] `Disinfection enable`.

Mind that if the system remains in `Maintenance mode` for too long (e.g. no test run active or a test run active without unit pump operation), the frost protection valve may open (see "5.2.3 To protect the water circuit against freezing" [▶ 10]).

It is not desirable for the protective functions to be active during installation or service. Therefore:

- **At first power-on:** The maintenance mode is active, and the protective functions are disabled by default. After 12 hours, the maintenance mode will be deactivated, and the protective functions will be enabled automatically, except [4.18] `Disinfection enable`.
- **Afterwards:** Whenever you go to [7] `Maintenance mode` the protective functions are disabled for 12 hours or until you exit `Maintenance mode`. **Note:** [4.18] `Disinfection enable` does not automatically restart when exiting maintenance mode.

NOTICE

Maintenance mode. During maintenance mode the following operations are ignored / NOT ignored:

- NOT ignored: [9.15.4] `Outdoor unit fuse limit`.

- Ignored:

- [9.15.1] `Legal limit`
- [9.15.3] `System limit`
- [9.14.1] = `Smart grid ready contacts` (or via Modbus / Cloud) (Smart Grid operation modes: `Forced off` / `Forced on` / `Recommended on`)
- [9.14.1] = `Smart Meter Contact` (or via Modbus / Cloud) (imposed power limit)
- [5.2] `Quiet operation`

NOTICE

Maintenance mode / Emergency acknowledgement. Maintenance mode is intended for installers and service technicians. When entering maintenance mode, it is assumed that the installer is already aware of any active errors or system issues. Consequently, the system does NOT display any emergency acknowledgement pop-ups while maintenance mode is active. After exiting maintenance mode, if applicable, emergency acknowledgement pop-ups will be displayed. If it was already acknowledged before entering maintenance mode, no additional acknowledgement is necessary.

INFORMATION

Remote firmware update

1. If is displayed on the home screen, remote firmware update download is ongoing, and `Maintenance mode` cannot be started (greyed out) nor can the `Refrigerant recovery mode` be entered.

- **Note:** Downloading can take up to 60 minutes. During downloading, normal operation will continue.

- **Note:** If the firmware download is unsuccessful or interrupted, you must manually restart the process. The system does not perform automatic retries.

- Once downloading is finished, the unit gently shuts down its operation to reboot the system and will restart afterwards (if required).

2. During `Maintenance mode`, the remote firmware update cannot be started.

3. During `Refrigerant recovery mode`, the remote firmware update cannot be started.

INFORMATION

When in "Maintenance mode", and a malfunction has occurred, one or more icons will appear in the upper left corner of the screen. The function will not start.

- : an error occurred.
- : a warning occurred.
- : the safety valve is closed.

⇨ After clearing the malfunction status, the function can be started manually by pressing the start button.

8.1 Checklist before commissioning

1. After the installation of the unit, check the items listed below. For the outdoor unit, also check the commissioning items in the outdoor unit installation manual.
2. Close the unit.
3. Remove the protective cardboard from the heat exchanger.
4. Power up the unit.

NOTICE

To prevent the pump from running in dry conditions, only power ON the unit when there is water in the unit.

☐	You read the complete installation instructions, as described in the **installer reference guide**.
☐	The **indoor unit** is properly mounted.
☐	The following **field wiring** has been carried out according to this document and the applicable legislation: ▪ Between the local supply panel and the outdoor unit ▪ Between indoor unit and outdoor unit ▪ Between the local supply panel and the indoor unit ▪ Between the indoor unit and the valves (if applicable) ▪ Between the indoor unit and the room thermostat (if applicable) ▪ Between the indoor unit and the domestic hot water tank (if applicable)
☐	The **normally closed shut-off valve** (inlet leak stop) is properly installed.
☐	The system is properly **earthed** and the earth terminals are tightened.
☐	The **fuses**, **circuit breakers**, or **locally installed protection devices** are of the size and type specified in this document, and have NOT been bypassed.

☐	The **power supply voltage** matches the voltage on the identification label of the unit.
☐	There are NO **loose connections** or damaged electrical components in the switch box.
☐	There are NO **damaged components** or **squeezed pipes** on the inside of the indoor and outdoor units.
☐	**Backup heater circuit breaker** F1B (field supply) is turned ON.
☐	Only for tanks with built-in booster heater: **Booster heater circuit breaker** F2B (field supply) is turned ON.
☐	The correct pipe size is installed and the **pipes** are properly insulated.
☐	There is NO **water leak** inside the indoor unit.
☐	The **shut-off valves** are properly installed and fully open.
☐	The **system / field piping** is fully flushed.
☐	If **automatic air purge valves** are installed in the field piping: ▪ Between the outdoor unit and the indoor unit (on the entering water pipe of the indoor unit), they must be closed after commissioning. ▪ After the indoor unit (on the emitter side), they may remain open after commissioning.
☐	The **pressure relief valve** (space heating circuit) purges water when opened. Clean water MUST come out.
☐	The **minimum water volume** is guaranteed in all conditions. See "To check the water volume and flow rate" in "5.1 Preparing water piping" [▸ 7].
☐	(if applicable) The **domestic hot water tank** is filled completely.
☐	The **water quality** complies with EU directive 2020/2184.
☐	**No anti-freeze solution** (e.g. glycol) is added to the water.
☐	The **"No glycol" tag** (delivered as accessory) is attached to the field piping near the filling point.
☐	You explained to the user how to safely use the R290 heat pump. For more information about this, see the dedicated Service Manual ESIE22-02 "Systems using R290 refrigerant" (available on https://my.daikin.eu).

8.2 Checklist during commissioning

☐	To unlock the **outdoor unit** (compressor).
☐	To open the **stop valve of the outdoor unit's refrigerant vessel**.
☐	To update the **user interface software** to the latest version.
☐	To perform an **air purge**.
☐	To check that the **minimum flow rate** during cooling / heating start-up / defrost / backup heater operation is guaranteed in all conditions. See "To check the water volume and flow rate" in "5.1 Preparing water piping" [▸ 7].
☐	To perform an **actuator test run**.
☐	To perform a **test run**.
☐	To perform (start) an **underfloor screed dryout** (if necessary).

8.2.1 To unlock the outdoor unit (compressor)

NOTICE

During the locked state, the heat pump is NOT allowed to operate.

Limited operation / commissioning is possible via other heat sources linked to [5.23] `Emergency selection` (see " [10.7] `System 4/4`" [▸ 26]).

NOTICE

Do NOT turn off the power during the unlocking procedure.

If there is a power interruption during the unlocking process, the system MUST be put back to user mode and the generation of the digital key MUST be restarted.

Who	Only trained installers with the required level of competences are authorised to perform the unlocking procedure (i.e. generate the Digital Key).
What	The compressor of Daikin Altherma 4 heat pumps is shipped in a locked state. During commissioning, it must be unlocked via the Digital Key function on the Daikin e-Care app and on the user interface of the indoor unit. 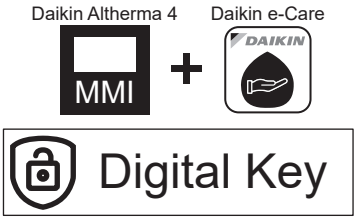 **Note:** To clear certain R290-related errors (e.g. R290 refrigerant leakage, gas sensor errors), you also need to use the Digital Key function.
When	**Option 1 (configuration wizard):** At first power ON of the unit the configuration wizard starts automatically. After you completed all steps in the wizard (see "7.1 `Configuration wizard`" [▸ 25]), the user interface will show an error message instructing to start the Digital Key function (i.e. perform the unlocking procedure). **Option 2 (errors):** When there are errors that need the Digital Key to clear, you can start the Digital Key function from the respective error messages.

Required	▪ Smartphone (iOS/Android supported) with the Daikin e-Care app installed.
	  ▪ To download the app, see "1 About this document" [▸ 2].
	  ▪ Offline functionality to generate the Digital Key is supported (if the user was already logged in).
	▪ Stand By Me professional account (to log in to the app), with the required level of training to handle R290 units.

Attention points	▪ Maximum 5 unlock attempts per 15 minutes are allowed. If exceeded, the unit does NOT allow any other attempts for 1 hour. ▪ Once the Digital Key is entered, permissions on the unit are increased for 6 hours. It is recommended for the installer to revert to user mode when leaving the site.

Unlocking procedure (flowchart)

1. e-Care app > Homepage
   Digital Key
2. Generation of the digital key (3-step process):
   1. Identification of the unit
   2. Safety questionnaire
   3. Generation of the digital key
3. Opening of the stop valve of the outdoor unit's refrigerant vessel
4. Confirmation that the refrigerant vessel valve is open
   Result: When confirmed, the unit is fully functional
5. Confirmation of the unlocking procedure completion
6. Commissioning checklist

Unlocking procedure (detailed steps)

1		On the homepage of the Daikin e-Care app, go to: 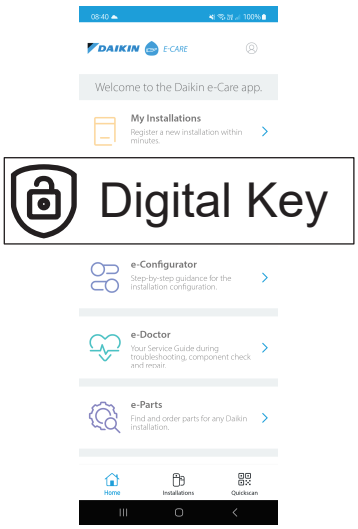 **Result:** The app verifies if the installer has the required level of competences to perform the unlocking procedure. If not, an error is shown and actions are restricted.
2		The 3-step process to generate the Digital Key starts: ▪ 2.1 Identification of the unit ▪ 2.2 Safety questionnaire ▪ 2.3 Generation of the Digital Key
2.1		**Identification of the unit** Scan the QR code on the name plate of the indoor unit. The app will check if this unit is already registered and found by Stand By Me. For new installations, you will need to register the unit before you can go to the next step.
2.2		**Safety questionnaire** Answer safety questions. This short list of questions helps the installer verifying that the minimum safety requirements to activate the compressor are met. When the checklist is completed, the app checks the answers, and generates a report. Only if all the safety requirements are met, you can go to the next step.
2.3		**Generation of the Digital Key**
	2.3.1 MMI	The app shows a first code. Enter this code in the user interface. For example: 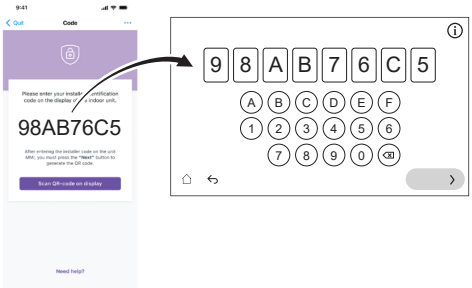
	2.3.2 MMI	The user interface generates a QR code. Scan this code with the app. For example:
	2.3.3 MMI	The app shows a second code (= Digital Key; one-time code). Enter this code in the user interface. For example: 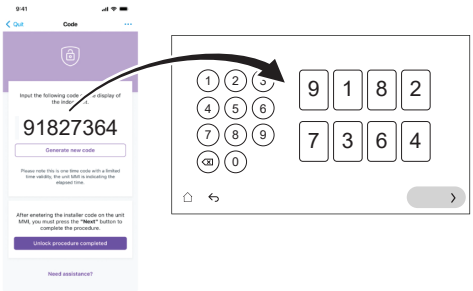
	Result:	If everything is OK, then the user interface shows a confirmation.
3		When instructed by the user interface, open the stop valve of the outdoor unit's refrigerant vessel. See "8.2.2 To open the stop valve of the outdoor unit's refrigerant vessel" [▶ 35].
4	MMI	On the user interface, confirm that the refrigerant vessel valve is open.
	Result:	When confirmed, the unit is fully functional.
5		On the app, confirm the completion of the unlocking procedure.
6		On the app, you will be directed to the commissioning tool where you can fill in the commissioning checklist to complete the detailed checks on the installation. When the commissioning process is completed, the unit is ready to operate.

8.2.2 To open the stop valve of the outdoor unit's refrigerant vessel

NOTICE

After installation, the stop valve must remain fully open to prevent damage to the seal.

NOTICE

When opening the stop valve of the outdoor unit's refrigerant vessel, use appropriate tools to prevent damage to the stop valve.

For safe transportation, almost all refrigerant is stored in the refrigerant vessel of the outdoor unit. During commissioning, when performing the unlocking procedure of the outdoor unit (see "8.2.1 To unlock the outdoor unit (compressor)" [▶ 33]), the stop valve of the refrigerant vessel must be fully opened (when instructed by the user interface) and remain fully open.

1. Make sure there is no gas leak on the circuit between the indoor unit and the outdoor unit by using a gas leak detector.
2. Remove the cap.
3. Turn the stop valve fully open (turn as shown until it cannot be turned any further) and leave it fully open.
4. Reattach the cap to prevent leakage.
5. Recheck to make sure there is no gas leak.

In case of EPSKS04~07A*:

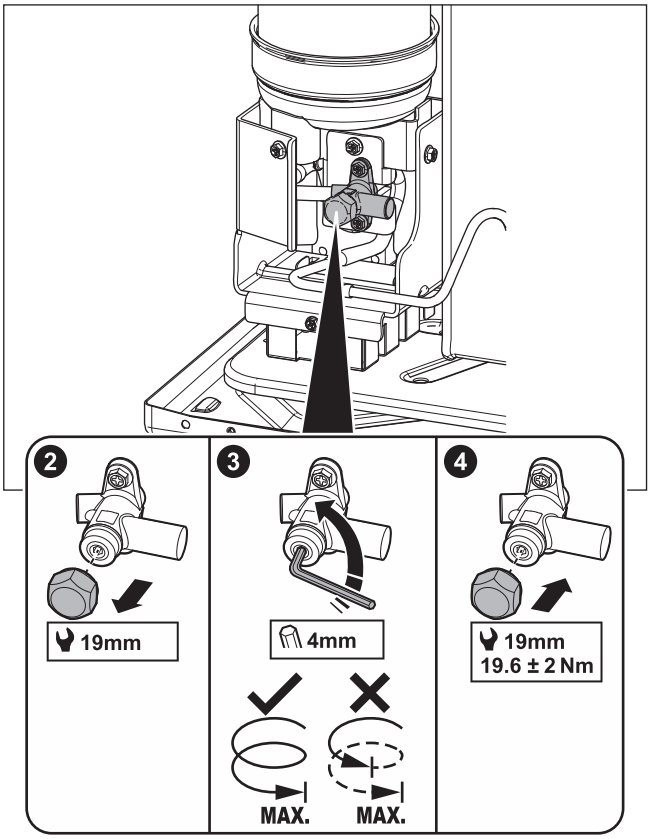

In case of EPSK06~14A*:

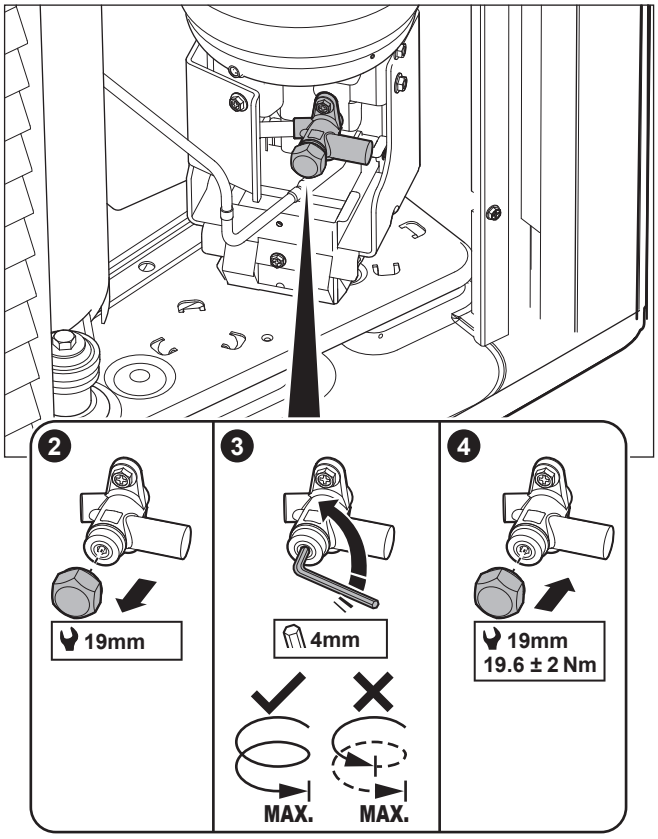

Sticker – In case of EPSKS04~07A*:

The sticker on the service cover of the outdoor unit contains info about opening the stop valve of the outdoor unit's refrigerant vessel. Some text is in English. This is the translation:

#	English	Translation
10	Unlock the unit before opening the valve.	Unlock the unit before opening the valve.
10a	Unlock via the MMI and e-Care app. The MMI will instruct when to open the valve.	Unlock via the MMI (user interface of indoor unit) and e-Care app. The MMI will instruct when to open the valve.
10c	Turn fully open and leave fully open.	Turn fully open and leave fully open.

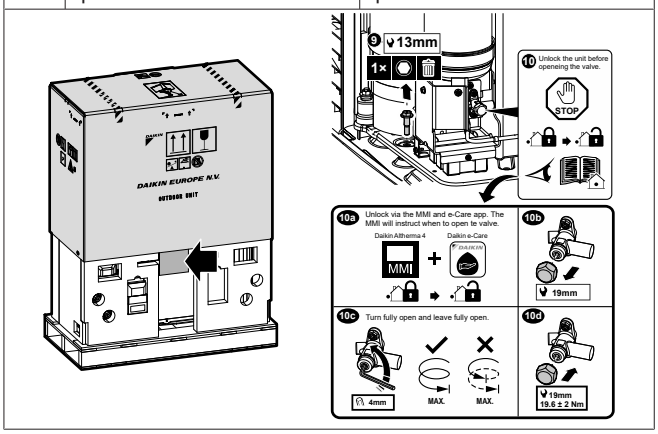

Sticker – In case of EPSK06~14A*:

The sticker on the service cover of the outdoor unit contains info about opening the stop valve of the outdoor unit's refrigerant vessel. Some text is in English. This is the translation:

#	English	Translation
4	Unlock the unit before opening the valve.	Unlock the unit before opening the valve.
4a	Unlock via the MMI and e-Care app. The MMI will instruct when to open the valve.	Unlock via the MMI (user interface of indoor unit) and e-Care app. The MMI will instruct when to open the valve.
4c	Turn fully open and leave fully open.	Turn fully open and leave fully open.

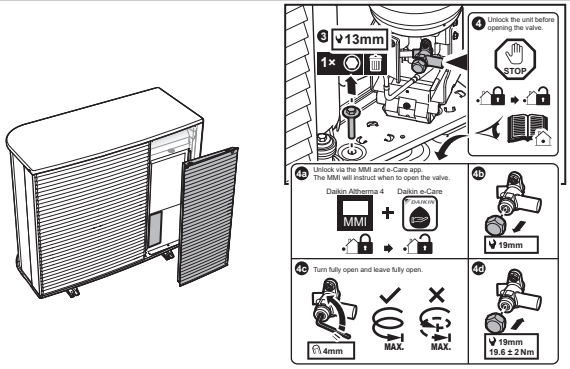

8.2.3 To update the user interface software

During commissioning, it is good practice to update the user interface software so that you have all latest functionality available.

1 Download the latest user interface software (available on https://my.daikin.eu; search via the Software Finder).

2 Put the software on a USB-stick (must be formatted as FAT32).

3 Power OFF the unit.

4 Insert the USB-stick in the USB-port located on the interface PCB (A11P).

5 Power ON the unit. Do NOT power ON the unit if the switch box is open.

Result: The software is automatically updated. You can follow its process on the user interface.

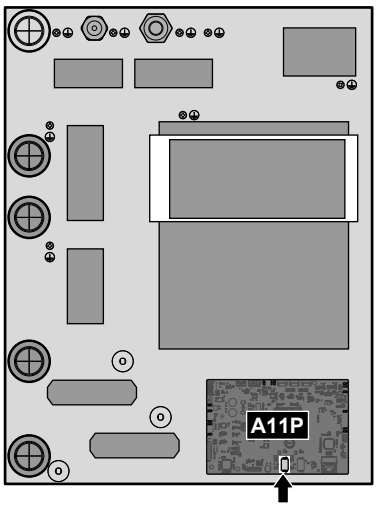

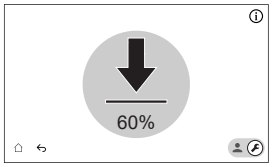

6 Power OFF the unit.

7 Unplug the USB stick from the USB-port located on the interface PCB (A11P).

8 Power ON the unit. Do NOT power ON the unit if the switch box is open.

8.2.4 To perform an air purge

NOTICE

Fully flushed. Make sure that the system / field piping is fully flushed before commissioning, so that potential contaminants are removed.

Reason: When performing an air purge, contaminants (i.e. sludge and microbiological organisms that create biofilm and gases) can lead to unintended activation of the indoor unit gas sensor. This generates error A0-02, and automatically stops the unit. Error A0-02 can only be cleared by trained installers with the required competences, as the procedure includes the generation of a Digital Key.

NOTICE

Second air purge. If you need to perform an air purge a second time (after 30 minutes), you must leave the maintenance mode and then enter it again.

NOTICE

The main and additional pump are not switched ON during an air purge. Therefore, the air purge for the mixing kit needs to be activated via normal operation.

The pumps are switched ON:

- by activating the external thermostat for the dedicated zone, which will activate the pump for that zone, or
- in the LWT control both pumps will be ON when the space heating/cooling operation is switched on on the home screen.

1	Switch to installer mode. 5678
2	Go to [7] `Maintenance mode` and `Confirm`. 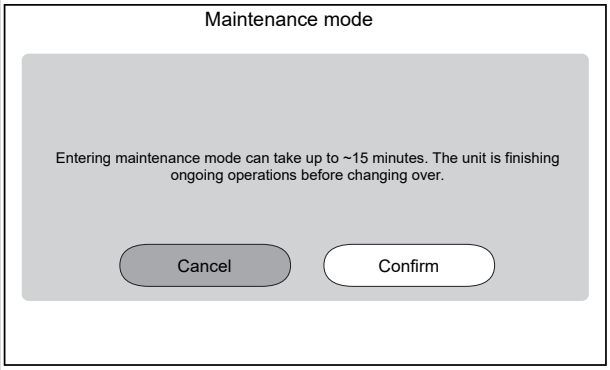 **Result:** Operation of `Heating/cooling` and `Domestic hot water` will be automatically turned off. **Remark:** If the unit is still in entering maintenance mode after 15 minutes, perform a power reset.

3	Go to [7.7] `Maintenance mode` > `Operation test run settings`, and define the pump PWM targets that you want to use during the test run. ▪ For air purge test run: You can choose between `Low speed` and `High speed`.		
	✿[094]	[7.7.8] `Pump limitation maintenance mode (Low speed)`	Pump PWM target (`Low speed`). Only used during actuator test run (only for unit pump test run) and air purge test run. 0.1~1 step: 0.1
	✿[095]	[7.7.8] `Pump limitation maintenance mode (High speed)`	Pump PWM target (`High speed`). Only used during actuator test run and air purge test run. 0.1~1 step: 0.1
4	Go to [7.2] `Maintenance mode` > `Air purge`.		

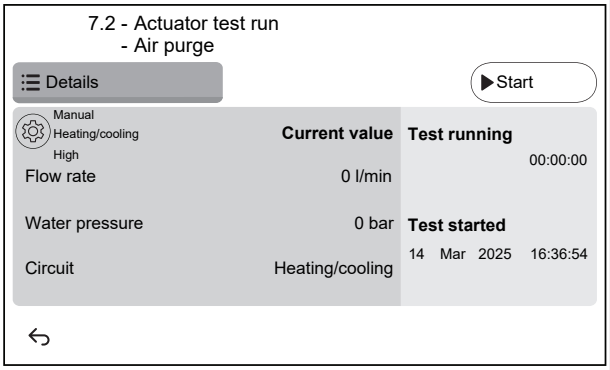

4.1	⚙ Settings: Use the settings to specify which `Air purge` should be performed and confirm. The settings cannot be changed when the `Air purge` is running.		

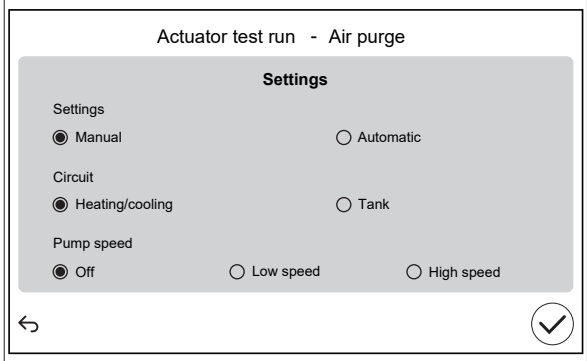

`Settings`		
▪ `Manual`	▪ `Automatic`	
`Circuit` (only for `Manual`):		
▪ `Heating/cooling`	▪ `Tank`	
`Pump speed` (only for `Manual`):		
▪ `Off`	▪ `Low speed`	▪ `High speed`

4.2	Tap `Start` to run the air purge. **Result:** The air purge starts. It stops automatically after some time.
4.3	Tap `Stop` to stop the air purge. **Result:** The air purge stops.
5	After the air purge test:
5.1	Choose ⮌ to go back in the menu.
5.2	Choose ⌂ to leave the `Maintenance mode`.
6	When leaving `Maintenance mode`, the user interface automatically restores operation (`Heating/cooling` and `Domestic hot water`) as it was before entered `Maintenance mode`. Check if all operation modes are activated as expected.

8.2.5 To check the minimum flow rate

To check the minimum flow rate for the emitter circuit

1	Check the hydraulic configuration to find out which space heating loops can be closed by mechanical, electronic, or other valves.
2	Close all space heating loops that can be closed.
3	Start the pump test run (see "8.2.6 To perform an actuator test run" [▶ 38]). ▪ Choose [7.1.4] `Unit pump` ▪ Choose pump speed: `High`
4	Read out the flow rate[(a)] and adjust the bypass valve setting to reach the minimum required flow rate **+ 4 l/min**.

[(a)] During pump test run, the unit can operate below the minimum required flow rate.

To check the minimum flow rate for the tank circuit

1	Switch to installer mode. 5678
2	Go to [7] `Maintenance mode` and `Confirm`.

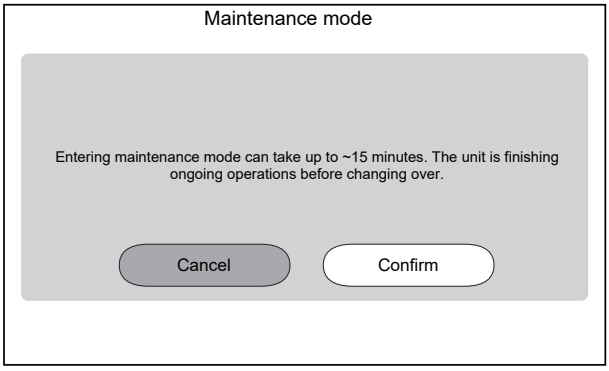

Note: Entering `Maintenance mode` can take up to ~15 minutes as the unit is finishing ongoing operations before changing over.

Result: Operation of `Heating/cooling` and `Domestic hot water` will be automatically turned off.

3	Go to [7.2] `Maintenance mode` > `Air purge`.

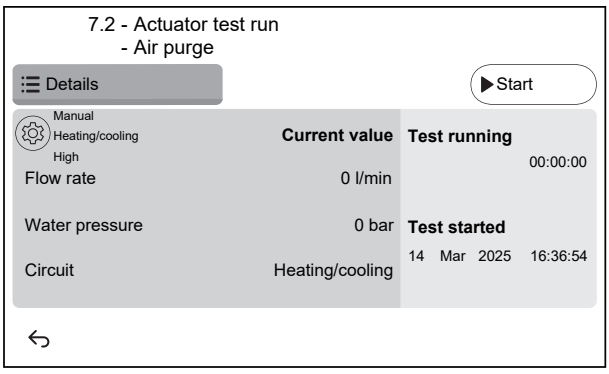

3.1	Settings: Use the settings to specify which `Air purge` should be performed and confirm.

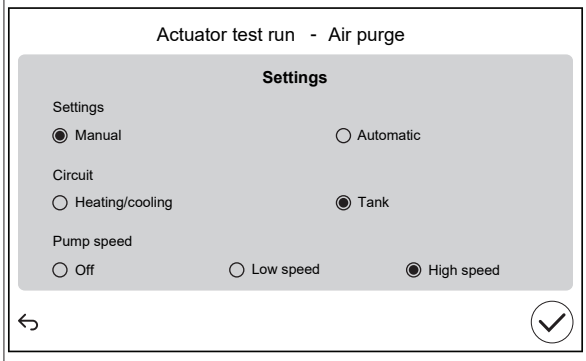

`Settings`		
▪ **Manual**	▪ `Automatic`	
`Circuit:`		
▪ `Heating/cooling`	▪ **Tank**	
`Pump speed:`		
▪ `Off`	▪ `Low speed`	▪ **High speed**

4	Read out the flow rate.

If operation is…	Then…[a]
Cooling / heating start-up / defrost / backup heater operation	The **REQUIRED** minimum flow rate is: ▪ For EPBX07: 20 l/min ▪ For EPBX10: 22 l/min ▪ For EPBX14: 24 l/min
Domestic hot water production	The **RECOMMENDED** minimum flow rate is: ▪ For EPBX07: 20 l/min ▪ For EPBX10: 25 l/min ▪ For EPBX14: 25 l/min

[a] • **REQUIRED** minimum flow rate = Minimum flow rate needed for reliable and error-free operation.
• **RECOMMENDED** minimum flow rate = Minimum flow rate recommended for optimal system performance.

8.2.6 To perform an actuator test run

Purpose

Perform an actuator test run to confirm the operation of the different actuators. For example, when you select `Unit pump`, a test run of the pump will start.

1	Switch to installer mode. 5678
2	Go to [7] `Maintenance mode` and `Confirm`.

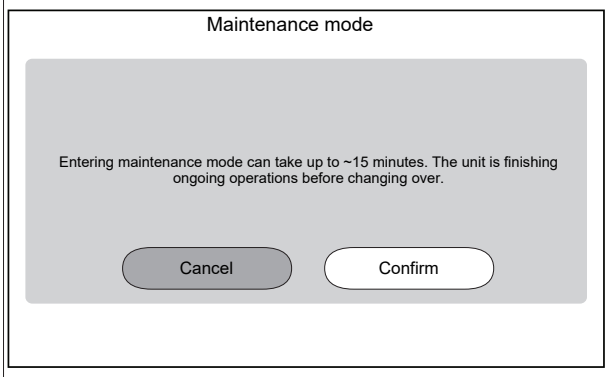

Result: Operation of `Heating/cooling` and `Domestic hot water` will be automatically turned off.

Remark: If the unit is still in entering maintenance mode after 15 minutes, perform a power reset.

3	Go to [7.7] `Maintenance mode` > `Operation test run settings`, and define the pump PWM targets that you want to use during the test run. ▪ For unit pump test run: You can choose between `Low speed` and `High speed`. ▪ For other actuator test runs: `High speed` is used.		
	✿[094]	[7.7.8] `Pump limitation maintenance mode (Low speed)`	Pump PWM target (`Low speed`). Only used during actuator test run (only for unit pump test run) and air purge test run. 0.1~1 step: 0.1
	✿[095]	[7.7.8] `Pump limitation maintenance mode (High speed)`	Pump PWM target (`High speed`). Only used during actuator test run and air purge test run. 0.1~1 step: 0.1
4	Go to [7.1] `Maintenance mode` > `Actuator test run`.		
5	Select an actuator to test. **Example:** [7.1.4] `Unit pump`		

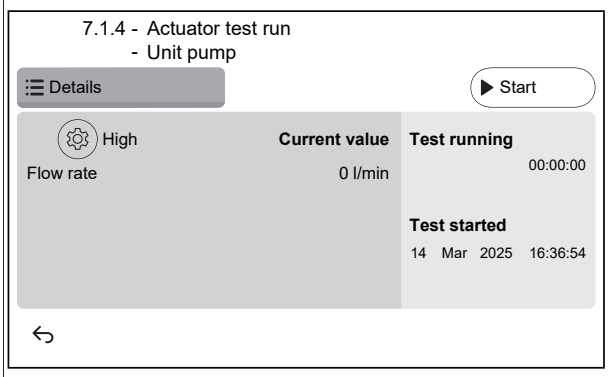

5.1	Settings: For certain actuators, you can define some settings before the test.
5.2	Tap `Start` to run the test. **Result:** ▪ Values for actuator shown in the detail section. ▪ Time measurement starts.
5.3	Tap `Stop` to stop the test. **Note:** Due to a required after run time, the test run can continue for a certain time even when it has been stopped.
6	After the actuator test:
6.1	Choose ↩ to go back in the menu.

6.2	Choose ⌂ to leave the `Maintenance mode`.
7	When leaving `Maintenance mode`, the user interface automatically restores operation (`Heating/cooling` and `Domestic hot water`) as it was before entered `Maintenance mode`. Check if all operation modes are activated as expected.

Possible actuator test runs

Depending on your unit type and selected settings, some tests will not be visible.

INFORMATION°

During the actuator tests for `Booster heater`, `Bivalent` and `Tank boiler` the setpoint is not respected. The component will be stopped when reaching its internal limits. If these limits are reached the actuator test will continue and activate that component again when the limitations allow its operation.

- [7.1.1] `Booster heater` test
- [7.1.2] `Bivalent` test
- [7.1.3] `Tank boiler` test
- [7.1.4] `Unit pump` test

INFORMATION

Make sure that all air is purged before executing the test run. Also avoid disturbances in the water circuit during the test run.

- [7.1.5] `Diverter valve` test (3-way valve for switching between space heating and tank heating)
- [7.1.6] `Backup heater` test
- [7.1.7] `Tank valve` test
- [7.1.8] `Bypass valve` test

Bizone mixing kit actuator tests

INFORMATION

This functionality is NOT available in early versions of the user interface software.

- [7.1.9] `Bizone kit mixing valve` test
- [7.1.10] `Bizone kit direct pump` test
- [7.1.11] `Bizone kit mixed pump` test

To execute an actuator test on the Bizone mixing kit go to home screen and turn on operation of `Heating/cooling` and adapt the setpoint of the main zone. Then visual check if the pumps are working and the mixing valve are turning.

8.2.7 To perform an operation test run

NOTICE

Before starting an operation test run make sure the minimum flow requirements are guaranteed (See "8.2.5 To check the minimum flow rate" [▶ 37]).

1	Switch to installer mode. 5678
2	Go to [7] `Maintenance mode` and `Confirm`.

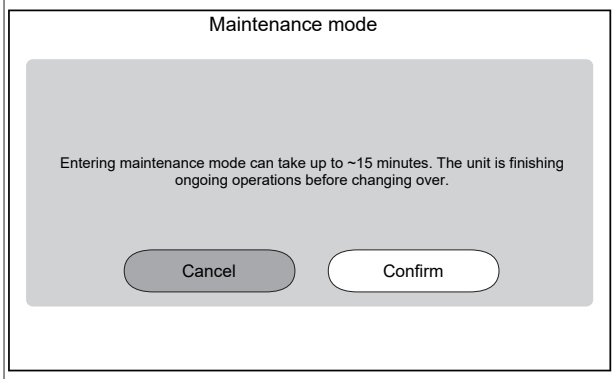

Result: Operation of `Heating/cooling` and `Domestic hot water` will be automatically turned off.

Remark: If the unit is still in entering maintenance mode after 15 minutes, perform a power reset.

3	Go to [7.7] `Maintenance mode` > `Operation test run settings`, and define the target temperatures that you want to use during the operation test run.	
✿[030]	[7.7.1] `Space heating delta T target`	Delta T target that will be used during the space heating test run. 2~20°C
✿[031]	[7.7.2] `Space heating leaving water target`	Target leaving water temperature that will be used during the space heating test run. 5~71°C
✿[032]	[7.7.3] `Space heating room`	Target room temperature that will be used during the space heating test run. 5~30°C
✿[033]	[7.7.4] `Space cooling delta T target`	Delta T target that will be used during the space cooling test run. 2~10°C
✿[034]	[7.7.5] `Space cooling leaving water target`	Target leaving water temperature that will be used during the space cooling test run. 5~30°C
✿[035]	[7.7.6] `Space cooling room`	Target room temperature that will be used during the space cooling test run. 5~30°C
✿[077]	[7.7.7] `Tank setpoint`[a]	Target tank temperature that will be used during the tank heat-up test run. 20~85°C
✿[145]	[7.7.9] `Tank target BSH test run`[b]	Target tank temperature that will be used during the booster heater test run. 25~60°C
4	Go to [7.3] `Maintenance mode` > `Operation test run`	

5	Select an operation to test. **Example:** [7.3.1] `Space heating`.

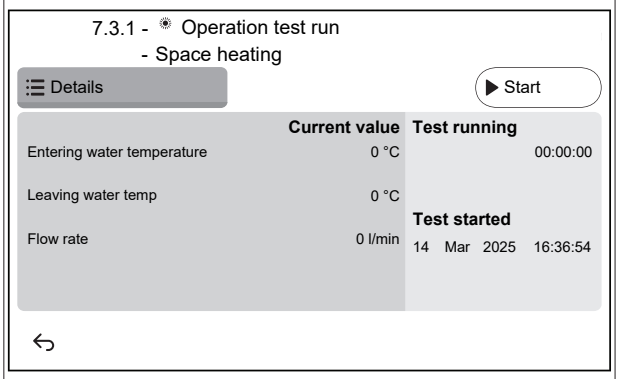

5.1	Tap `Start` to run the operation test. **Result:** The operation test starts.
5.2	Tap `Stop` to stop the operation test. **Note:** Even if the test run has been stopped, it can continue up to its minimum operation time set in [3.15] `Heatpump minimum on time`.
6	After the operation test run:
6.1	Choose ↩ to go back in the menu.
6.2	Choose ⌂ to leave the `Maintenance mode`.
7	When leaving `Maintenance mode`, the user interface automatically restores operation (`Heating/cooling` and `Domestic hot water`) as it was before entered `Maintenance mode`. Check if all operation modes are activated as expected.

(a) If a tank is not connected, this setting will still appear for wall-mounted units but it will NOT be effective.
(b) Only applicable for wall-mounted units. If a tank is not connected, this setting will NOT appear.

8.2.8 To perform an underfloor heating screed dryout

NOTICE

The installer is responsible for:

- contacting the screed manufacturer for the maximum allowed water temperature, to avoid cracking the screed,
- programming the underfloor heating screed dryout schedule according to the initial heating instructions of the screed manufacturer,
- checking the proper functioning of the setup on a regular basis,
- performing the correct program complying with the type of the used screed.

NOTICE

Before starting an underfloor heating screed dryout make sure the minimum flow requirements are guaranteed (See "8.2.5 To check the minimum flow rate" [▶ 37]).

NOTICE

When two zones are selected the underfloor heating screed dryout can only be executed on the main zone.

NOTICE

When there is a power failure, the underfloor heating screed dryout will continue where it was interrupted in the underfloor heating screed dryout program.

NOTICE

During the underfloor heating screed dryout program, a setpoint increase can occur in relation to the selected setpoint (see graph below).

- At outdoor temperatures below –10°C, the deviation between the selected setpoint and the actual target setpoint can increase significantly based on ambient conditions.
- If the underfloor heating screed dryout is NOT allowed to operate with the increased setpoint conditions, it is not recommended to start the screed dryout to prevent damage to the screed.
- If [3.13.5] `Bizone kit installed` is ON (installed), the mixing station will ensure that the temperature is mixed down to the selected target temperature of the underfloor heating screed dryout program.

INFORMATION

The procedure below indicates that you need to tap `Stop` to stop the function, but the `Stop` button is NOT available in early versions of the user interface software. Instead, use ↩ or ⌂ to stop the function.

1	Switch to installer mode. 5678
2	Go to [7] `Maintenance mode` and `Confirm` .

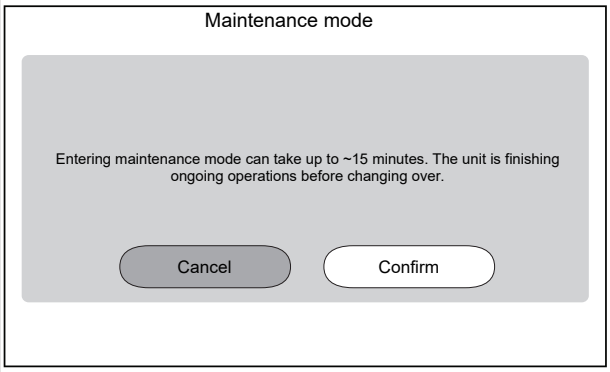

Result: Operation of `Heating/cooling` and `Domestic hot water` will be automatically turned off.

Remark: If the unit is still in entering maintenance mode after 15 minutes, perform a power reset.

3	Go to [7.4] `Maintenance mode` > `UFH screed dryout`

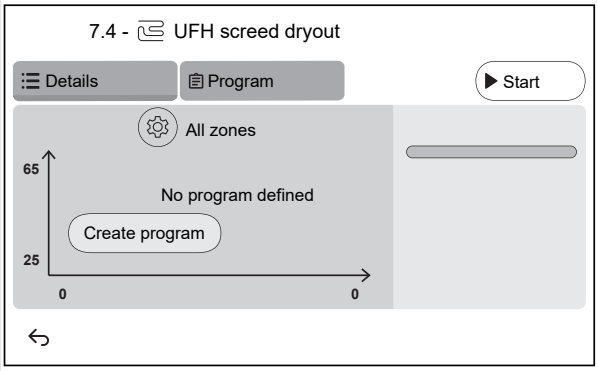

3.1	Tap on `Create program` or tap on `Program` and + to define a program step. A program can consists of multiple program-steps and a maximum of 30 program-steps. 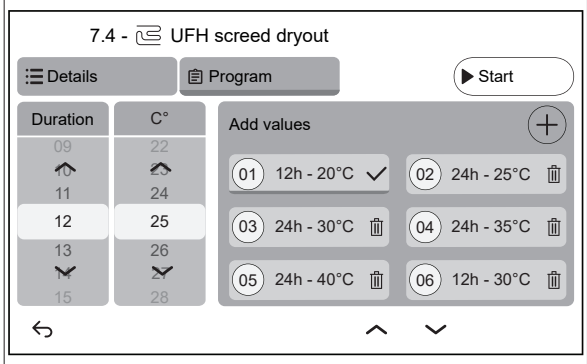 Each program step contains the sequence number, the duration and desired leaving water temperature.
3.2	⚙ Settings: **Note:** This functionality is NOT available in early versions of the user interface software. Underfloor heating screed dryout can only be executed on the main zone.
3.3	Tap `Start` to run the underfloor heating screed dryout. 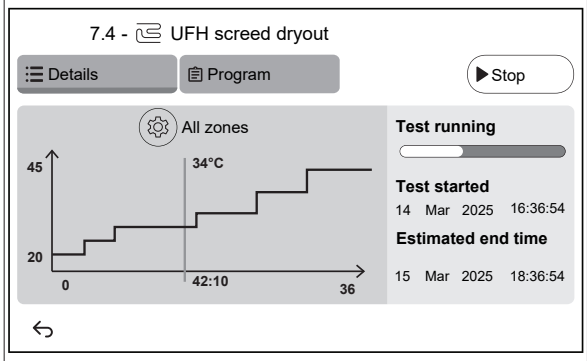 **Result:** ▪ The underfloor heating screed dryout starts. It stops automatically when all steps are done. ▪ A progress bar indicates where the program is currently situated. ▪ The program start time and estimated end time based on the current time and duration of the program are displayed. ▪ The underfloor heating screen is used as home screen until the finish of the program.
3.4	Tap `Stop` to stop the underfloor heating screed dryout.
4	After the underfloor heating screed dryout:
4.1	Choose ↩ to go back in the menu.
4.2	Choose ⌂ to leave the `Maintenance mode`
5	When leaving `Maintenance mode`, the user interface automatically restores operation (`Heating/cooling` and `Domestic hot water`) as it was before entered `Maintenance mode`. Check if all operation modes are activated as expected.

9 Hand-over to the user

Once the test run is finished and the unit operates properly, make sure the following is clear for the user:

- Fill in the installer setting table (in the operation manual) with the actual settings.
- Make sure that the user has the printed documentation and ask him/her to keep it for future reference. Inform the user that he/she can find the complete documentation at the URL mentioned earlier in this manual.
- Explain to the user how to properly operate the system and what to do in case of problems.
- Show the user what to do for the maintenance of the unit.
- Explain about energy saving tips to the user as described in the operation manual.
- Explain to the user to NOT turn OFF the circuit breakers (**c**) to the units so that the protection remains activated. In case of normal kWh rate power supply (**a**), there is one circuit breaker. In case of preferential kWh rate power supply (**b**), there are two.

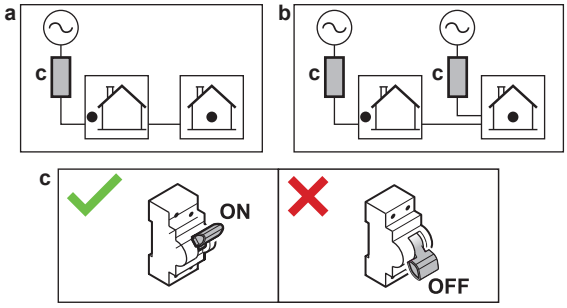

- Explain to the user that when they want to dispose of the unit, that they cannot do it themselves, but that they need to contact a Daikin certified technician.
- Explain to the user how to safely use the R290 heat pump. For more information about this, see the dedicated Service Manual ESIE22-02 "Systems using R290 refrigerant" (available on https://my.daikin.eu).

10 Technical data

A **subset** of the latest technical data is available on the regional Daikin website (publicly accessible). The **full set** of the latest technical data is available on the Daikin Business Portal (authentication required).

10.1 Piping diagram: Indoor unit

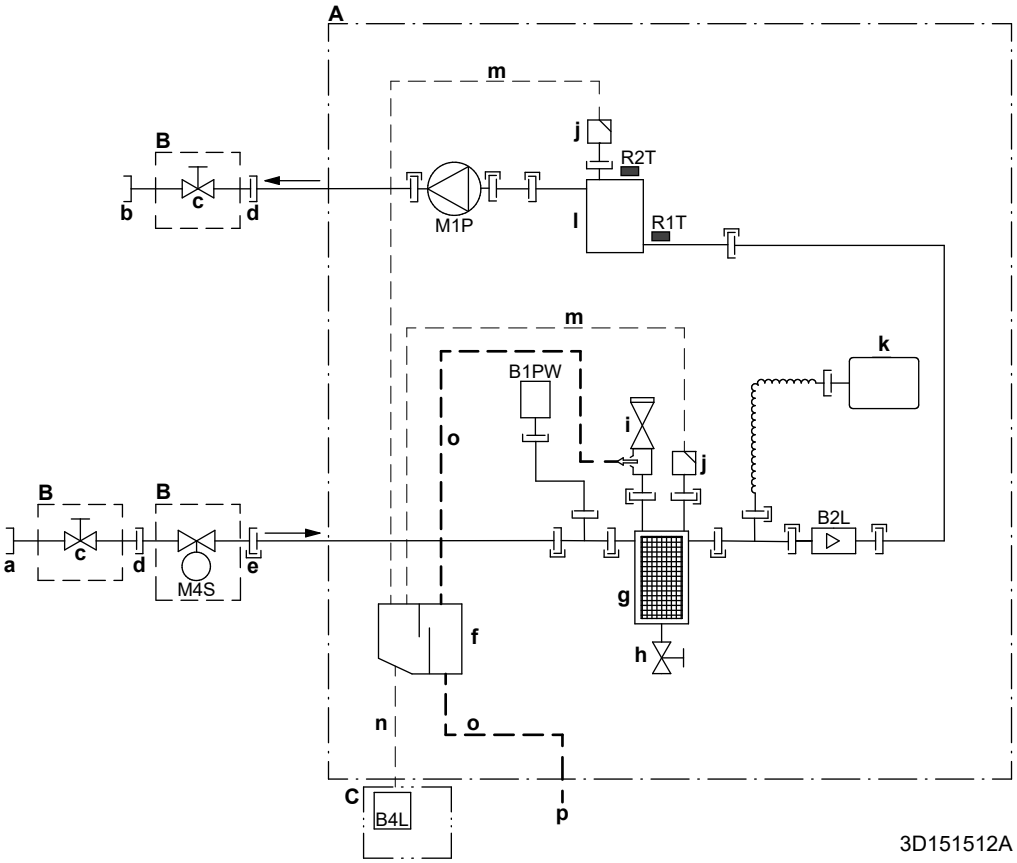

A	Indoor unit
B	Field installed (delivered as accessory)
C	Gas sensor box
a	Water IN from outdoor unit (screw connection, female) - EPBX(U)07: 1" - EPBX(U)10+14: 1 1/4"
b	Water OUT to space heating (screw connection, female) - EPBX(U)07: 1" - EPBX(U)10+14: 1 1/4"
c	Shut-off valve - EPBX(U)07: male 1" – female 1" - EPBX(U)10+14: male 1" – female 1 1/4"
d	Screw connection, female, 1"
e	Quick coupling
f	Gas separator
g	Magnetic filter/dirt separator
h	Drain valve
i	Safety valve
j	Air purge
k	Expansion vessel
l	Backup heater
m	Hose for air purge
n	Hose for gas
o	Drain hose for water
p	Drain outlet ID18
B1PW	Space heating water pressure sensor
B2L	Flow sensor
B4L	Gas sensor
M1P	Pump
M4S	Normally closed shut-off valve (inlet leak stop)(quick coupling – female 1")

Thermistors:

R1T	Inlet water
R2T	Backup heater – Water OUT

Connections:

—⊟—	Screw connection
—≫—	Flare connection

Quick coupling
Brazed connection

10.2 Wiring diagram: Indoor unit

See the internal wiring diagram supplied with the unit (on the inside of the indoor unit switch box cover). The abbreviations used are listed below. There are checkboxes for each `Field IO` connection on the internal wiring diagram. It is recommended to mark the checkbox for the selected standard option after wiring.

Checkboxes internal wiring diagram: Example

This example shows how to mark a checkbox on the internal wiring diagram.

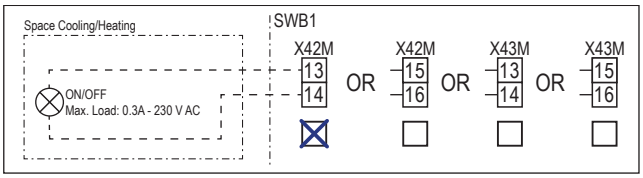

Notes to go through before starting the unit

English	Translation
Notes to go through before starting the unit	Notes to go through before starting the unit
X2M	Main terminal – Outdoor unit
X40M	Main terminal – Indoor unit
X41M	Main terminal – Backup heater
X42M, X43M	Field wiring for high voltage
X44M, X45M	Field wiring for SELV (Safety Extra Low Voltage)
X7M, X8M	Booster heater power supply terminal
—·—·—·—	Earth wiring
– – – – – – –	Field supply
①	Several wiring possibilities
	Option
	Not mounted in switch box
	Wiring depending on model
	PCB
Note 1: Connection point of the power supply for the BUH should be foreseen outside the unit.	Note 1: Connection point of the power supply for the backup heater should be foreseen outside the unit.
Backup heater power supply	Backup heater power supply
☐ 4.5 kW (1N~, 230 V)	☐ 4.5 kW (1N~, 230 V)
☐ 4.5 kW (3N~, 400 V)	☐ 4.5 kW (3N~, 400 V)
☐ 4.5 kW (3~, 230 V)	☐ 4.5 kW (3~, 230 V)
☐ 4.5 kW (2~, 230 V)	☐ 4.5 kW (2~, 230 V)
☐ 6 kW (1N~, 230 V)	☐ 6 kW (1N~, 230 V)
☐ 9 kW (3N~, 400 V)	☐ 9 kW (3N~, 400 V)
User installed options	User installed options
☐ Remote user interface	☐ Dedicated Human Comfort Interface (BRC1HHDA used as room thermostat)
☐ Ext. indoor thermistor	☐ External indoor thermistor
☐ Ext outdoor thermistor	☐ External outdoor thermistor
☐ Safety thermostat	☐ Safety thermostat
☐ Smart Grid	☐ Smart Grid
☐ WLAN cartridge	☐ WLAN cartridge
☐ Bizone mixing kit	☐ Bizone mixing kit
Main LWT	Main leaving water temperature

English	Translation
☐ On/OFF thermostat (wired)	☐ ON/OFF thermostat (wired)
☐ On/OFF thermostat (wireless)	☐ ON/OFF thermostat (wireless)
☐ Ext. thermistor	☐ External thermistor
☐ Heat pump convector	☐ Heat pump convector
Add LWT	Additional leaving water temperature
☐ On/OFF thermostat (wired)	☐ ON/OFF thermostat (wired)
☐ On/OFF thermostat (wireless)	☐ ON/OFF thermostat (wireless)
☐ Ext. thermistor	☐ External thermistor
☐ Heat pump convector	☐ Heat pump convector

Position in switch box

English	Translation
Position in switch box	Position in switch box

Legend

A1P		Hydro PCB
A2P	*	ON/OFF thermostat (PC=power circuit)
A3P	*	Heat pump convector
A5P		Power supply PCB
A6P		Multistep backup heater PCB
A11P		Interface PCB
A12P		User interface PCB
A14P	*	PCB of the dedicated Human Comfort Interface (BRC1HHDA used as room thermostat)
A15P	*	Receiver PCB (wireless ON/OFF thermostat)
A30P	*	Bizone mixing kit PCB
F1B	#	Overcurrent fuse - Backup heater
F2B	#	Overcurrent fuse - Main
F3B	#	Overcurrent fuse - Booster heater
K1A, K2A	*	High voltage Smart Grid relay
K*M	*	Contactor booster heater
M2P	#	Domestic hot water pump
M2S	#	Shut-off valve – Main zone
M4P	#	C/H secondary pump
M4S		Normally closed shut-off valve (inlet leak stop)
M5P	#	C/H ext. pump – Main zone
M5S	*	3-way valve for space heating / domestic hot water
M6P	#	C/H ext. pump – Additional zone
M6S	#	Bivalent bypass valve
M7S	#	Decoupled bypass valve
M8S	#	Shut-off valve – Additional zone
P* (A14P)	*	Terminal
PC (A15P)	*	Power circuit
Q*DI	#	Earth leakage circuit breaker
Q1L		Thermal protector backup heater
Q4L	#	Safety thermostat

R1H (A2P)	*	Humidity sensor
R1T (A2P)	*	Ambient sensor ON/OFF thermostat
R1T (A14P)	*	Ambient sensor user interface
R2T (A2P)	*	External sensor (floor or ambient)
R5T (A1P)	*	Domestic hot water thermistor
R6T	*	External indoor or outdoor ambient thermistor
S1S	#	Preferential kWh rate power supply contact
S2S	#	Electricity meter pulse input 1
S3S	#	Electricity meter pulse input 2
S4S	#	Smart Grid feed-in (Smart Grid photovoltaic power pulse meter)
S10S-S11S	#	Low voltage Smart Grid contact
ST6 (A30P)	*	Connector
X*A, X*Y, X*Y*		Connector
X*M		Terminal strip
Z*C		Noise filter (ferrite core)

* Optional
\# Field supply

Translation of text on wiring diagram

English	Translation
(1) Main power connection	(1) Main power connection
2-pole fuse	2-pole fuse
Indoor unit supplied from outdoor	Indoor unit supplied from outdoor
Indoor unit supplied separately	Indoor unit supplied separately
Normal kWh rate power supply	Normal kWh rate power supply
Outdoor unit	Outdoor unit
Standard	Standard
SWB	Switch box
(2) Backup heater power supply	(2) Backup heater power supply
2-pole fuse	2-pole fuse
4-pole fuse	4-pole fuse
For these connections use the optional adapter wire harnesses.	For these connections use the optional adapter wire harnesses.
Only for 4.5 kW MBUH units	Only for 4.5 kW multistep backup heater units
Only for 9 kW MBUH units	Only for 9 kW multistep backup heater units
(3) Shut-off valve - Inlet leak stop	(3) Normally closed shut-off valve (inlet leak stop)
(4) Ext. thermistor	(4) External thermistor
External ambient sensor option (indoor or outdoor)	External ambient sensor option (indoor or outdoor)
Voltage	Voltage
(5) Domestic hot water tank	(5) Domestic hot water tank
3 wire type SPDT	3-wire type SPDT
For DHW tank option	For DHW tank option
Max. load	Maximum load
Only for DHW tank option	Only for DHW tank option
Only when DHW option is installed	Only when DHW option is installed
OR	OR
(6) Field supplied options	(6) Field supplied options
230 V AC Control Device	230 V AC Control Device
3-wire type (SPDT)	3-wire type (SPDT)
Alarm output	Alarm output

English	Translation
Bivalent bypass valve NC	Bivalent bypass valve – normally closed
Bivalent bypass valve NO	Bivalent bypass valve – normally open
Bizone mixing kit	Bizone mixing kit
C/H ext. add. pump	Cooling/heating external pump – Additional zone
C/H ext. main pump	Cooling/heating external pump – Main zone
C/H secondary pump	Cooling/heating secondary pump
Contact rating	Contact rating
Continuous	Continuous current
Decoupled bypass valve NC	Decoupled bypass valve – normally closed
Decoupled bypass valve NO	Decoupled bypass valve – normally open
DHW pump output	Domestic hot water pump output
DHW pump	Domestic hot water pump
Electric pulse meter input	Electricity meter
Ext. heat source	External heat source
For HV Smart Grid	For high voltage Smart Grid
For HV Smart Meter contact	For high voltage Smart Meter contact
For LV Smart Grid contacts	For low voltage Smart Grid contacts
For LV Smart Meter contact	For low voltage Smart Meter contact
For safety thermostat	For safety thermostat
For solar input	For solar input
Inrush	Inrush current
Max. load	Maximum load
ON/OFF output	ON/OFF output
Preferential kWh rate power supply contact	Preferential kWh rate power supply contact
Shut-off valve Add. NC	Shut-off valve – Additional zone – normally closed
Shut-off valve Add. NO	Shut-off valve – Additional zone – normally open
Shut-off valve Main NC	Shut-off valve – Main zone – normally closed
Shut-off valve Main NO	Shut-off valve – Main zone – normally open
Smart Grid PV power pulse meter	Smart Grid photovoltaic power pulse meter
Space cooling/heating	Space cooling/heating
Voltage	Voltage
With external relay	With external relay
(7) User interface	(7) User interface
3rd generation WLAN cartridge	Third generation WLAN cartridge
Fixed LAN connection	Fixed LAN connection
Remote user interface	Dedicated Human Comfort Interface (BRC1HHDA used as room thermostat)
SD card	Card slot for WLAN cartridge
To customer router	To customer router
Voltage	Voltage
(8) External On/OFF thermostats and heat pump convector	(8) External ON/OFF thermostats and heat pump convector

English	Translation
Additional LWT zone	Additional leaving water temperature zone
For heat pump convector	For heat pump convector
For wired On/OFF thermostat	For wired ON/OFF thermostat
For wireless On/OFF thermostat	For wireless ON/OFF thermostat
Main LWT zone	Main leaving water temperature zone
Max. load	Maximum load

Electrical connection diagram

Note: In case of signal cable: keep minimum distance to power cables >5 cm

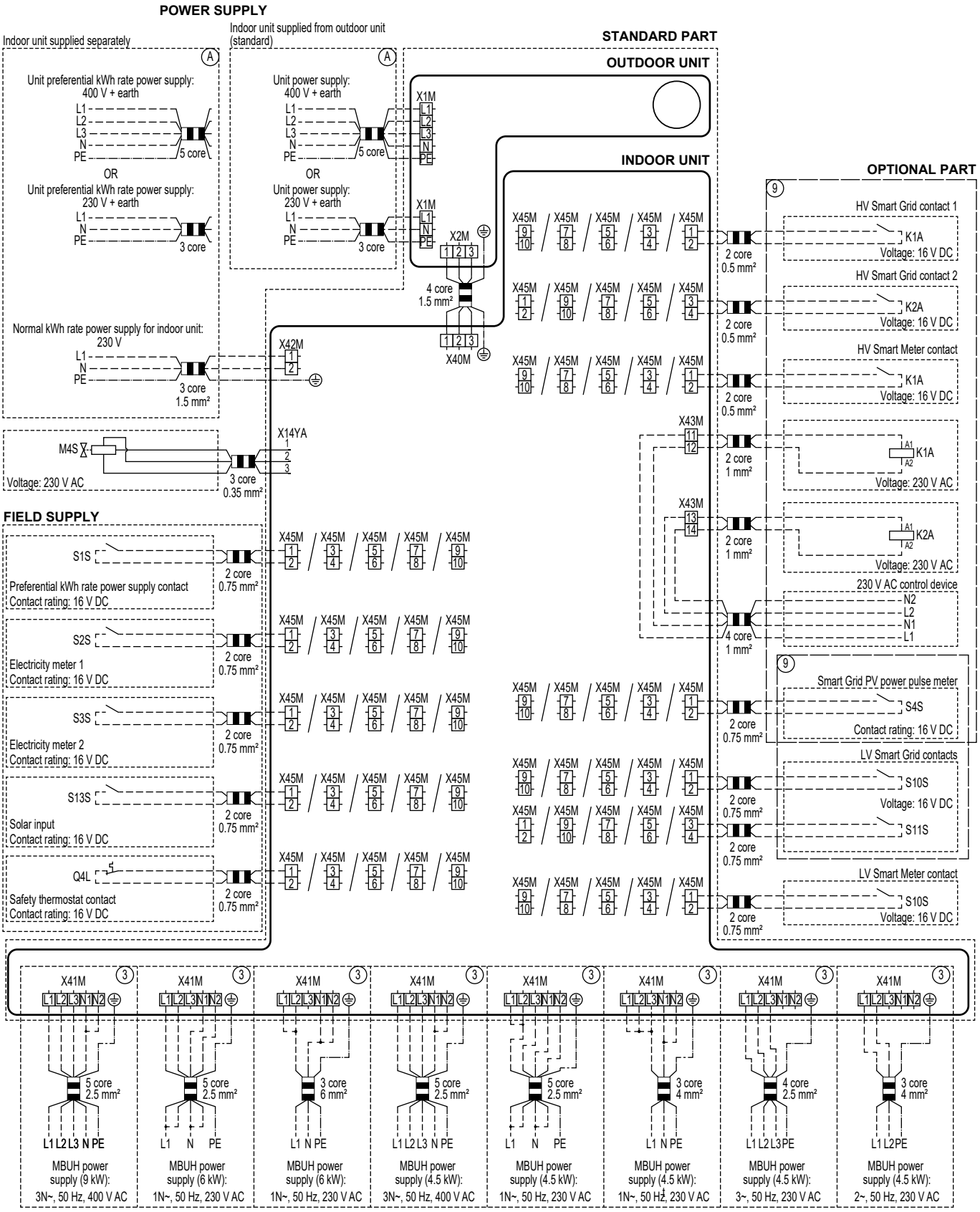

4D152877C (1/2)

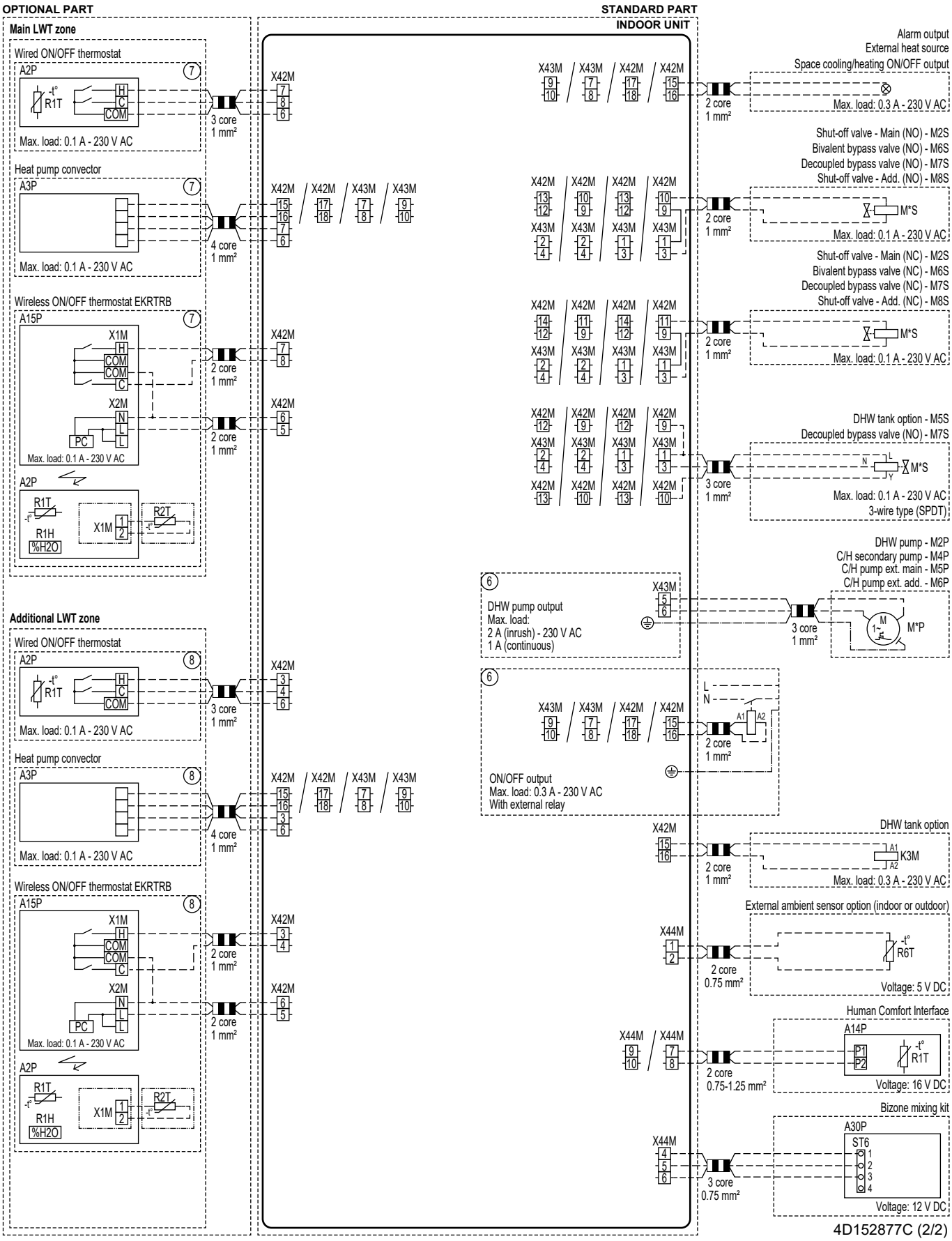
OPTIONAL PART
STANDARD PART
INDOOR UNIT
Main LWT zone
Wired ON/OFF thermostat
A2P
R1T
H
C
COM
Max. load: 0.1 A - 230 V AC
3 core
1 mm²
X42M
Heat pump convector
A3P
Max. load: 0.1 A - 230 V AC
4 core
1 mm²
X42M
X43M
Wireless ON/OFF thermostat EKRTRB
A15P
X1M
X2M
PC
Max. load: 0.1 A - 230 V AC
2 core
1 mm²
R1H
%H2O
R2T
Additional LWT zone
Alarm output
External heat source
Space cooling/heating ON/OFF output
Max. load: 0.3 A - 230 V AC
Shut-off valve - Main (NO) - M2S
Bivalent bypass valve (NO) - M6S
Decoupled bypass valve (NO) - M7S
Shut-off valve - Add. (NO) - M8S
M*S
Max. load: 0.1 A - 230 V AC
Shut-off valve - Main (NC) - M2S
Bivalent bypass valve (NC) - M6S
Decoupled bypass valve (NC) - M7S
Shut-off valve - Add. (NC) - M8S
DHW tank option - M5S
Decoupled bypass valve (NO) - M7S
3 core
Max. load: 0.1 A - 230 V AC
3-wire type (SPDT)
DHW pump - M2P
C/H secondary pump - M4P
C/H pump ext. main - M5P
C/H pump ext. add. - M6P
DHW pump output
Max. load:
2 A (inrush) - 230 V AC
1 A (continuous)
M*P
ON/OFF output
Max. load: 0.3 A - 230 V AC
With external relay
DHW tank option
K3M
Max. load: 0.3 A - 230 V AC
External ambient sensor option (indoor or outdoor)
X44M
R6T
0.75 mm²
Voltage: 5 V DC
Human Comfort Interface
A14P
P1
P2
0.75-1.25 mm²
Voltage: 16 V DC
Bizone mixing kit
A30P
ST6
Voltage: 12 V DC
4D152877C (2/2)

4P773385-1 E 00000007

Copyright 2024 Daikin

DAIKIN EUROPE N.V.
Zandvoordestraat 300, B-8400 Oostende, Belgium

4P773385-1E 2026.08