Installation manual



Daikin Altherma 3 R W

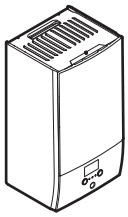

https://daikintechnicaldatahub.eu

EHBH04E▲6V▼
EHBH08E▲6V▼
EHBH08E▲9W▼

EHBX04E▲6V▼
EHBX08E▲6V▼
EHBX08E▲9W▼

▲= 1, 2, 3, …, 9, A, B, C, …, Z
▼= , , 1, 2, 3, …, 9, A, B, C, …, Z

Table of contents

1 About this document 2
2 Specific installer safety instructions 3
3 About the box 4
3.1 Indoor unit 4
3.1.1 To remove the accessories from the indoor unit 4
4 Unit installation 4
4.1 Preparing the installation site 4
4.1.1 Installation site requirements of the indoor unit 4
4.1.2 Special requirements for R32 units 5
4.1.3 Installation patterns 6
4.2 Opening and closing the unit 8
4.2.1 To open the indoor unit 8
4.2.2 To close the indoor unit 9
4.3 Mounting the indoor unit 9
4.3.1 To install the indoor unit 9
4.3.2 To connect the drain hose to the drain 10
5 Piping installation 10
5.1 Preparing refrigerant piping 10
5.1.1 Refrigerant piping requirements 10
5.1.2 Refrigerant piping insulation 10
5.2 Connecting refrigerant piping 10
5.2.1 To connect the refrigerant piping to the indoor unit 11
5.3 Preparing water piping 11
5.3.1 To check the water volume and flow rate 11
5.4 Connecting water piping 12
5.4.1 To connect the water piping 12
5.4.2 To fill the water circuit 12
5.4.3 To fill the domestic hot water tank 12
5.4.4 To insulate the water piping 12
6 Electrical installation 12
6.1 About electrical compliance 13
6.2 Guidelines when connecting the electrical wiring 13
6.3 Connections to the indoor unit 13
6.3.1 To connect the main power supply 14
6.3.2 To connect the backup heater power supply 15
6.3.3 To connect the shut-off valve 17
6.3.4 To connect the electricity meters 17
6.3.5 To connect the domestic hot water pump 18
6.3.6 To connect the alarm output 18
6.3.7 To connect the space cooling/heating ON/OFF output 19
6.3.8 To connect the changeover to external heat source 19
6.3.9 To connect the power consumption digital inputs 20
6.3.10 To connect the safety thermostat 20
6.3.11 Smart Grid 21
6.3.12 To connect the WLAN cartridge (delivered as accessory) 23
7 Configuration 23
7.1 Overview: Configuration 23
7.1.1 To access the most used commands 23
7.2 Configuration wizard 24
7.2.1 Configuration wizard: Language 24
7.2.2 Configuration wizard: Time and date 24
7.2.3 Configuration wizard: System 24
7.2.4 Configuration wizard: Backup heater 26
7.2.5 Configuration wizard: Main zone 26
7.2.6 Configuration wizard: Additional zone 27
7.2.7 Configuration wizard: Tank 27
7.3 Weather-dependent curve 28
7.3.1 What is a weather-dependent curve? 28
7.3.2 2-points curve 28
7.3.3 Slope-offset curve 29
7.3.4 Using weather-dependent curves 29
7.4 Settings menu 30
7.4.1 Main zone 30
7.4.2 Additional zone 30
7.4.3 Information 30
7.5 Menu structure: Overview installer settings 31
8 Commissioning 32
8.1 Checklist before commissioning 32
8.2 Checklist during commissioning 32
8.2.1 To check the minimum flow rate 33
8.2.2 To perform an air purge 33
8.2.3 To perform an actuator test run 33
8.2.4 To perform an operation test run 33
8.2.5 To perform an underfloor heating screed dryout 33
9 Hand-over to the user 34
10 Technical data 35
10.1 Piping diagram: Indoor unit 35
10.2 Wiring diagram: Indoor unit 36
10.3 Table 1 – Maximum refrigerant charge allowed in a room: indoor unit 39
10.4 Table 2 – Minimum floor area: indoor unit 39
10.5 Table 3 – Minimum bottom opening area for natural ventilation: indoor unit 39

1 About this document

Target audience

Authorised installers

Documentation set

This document is part of a documentation set. The complete set consists of:

- **General safety precautions:**
  - Safety instructions that you must read before installing
  - Format: Paper (in the box of the indoor unit)
- **Operation manual:**
  - Quick guide for basic usage
  - Format: Paper (in the box of the indoor unit)
- **User reference guide:**
  - Detailed step-by-step instructions and background information for basic and advanced usage
  - Format: Digital files on https://www.daikin.eu. Use the search function 🔍 to find your model.
- **Installation manual – Outdoor unit:**
  - Installation instructions
  - Format: Paper (in the box of the outdoor unit)
- **Installation manual – Indoor unit:**
  - Installation instructions
  - Format: Paper (in the box of the indoor unit)
- **Installer reference guide:**
  - Preparation of the installation, good practices, reference data, …
  - Format: Digital files on https://www.daikin.eu. Use the search function 🔍 to find your model.
- **Addendum book for optional equipment:**
  - Additional info about how to install optional equipment
  - Format: Paper (in the box of the indoor unit) + Digital files on https://www.daikin.eu. Use the search function 🔍 to find your model.

The latest revision of the supplied documentation is published on the regional Daikin website and is available via your dealer.

The original instructions are written in English. All other languages are translations of the original instructions.

Technical engineering data

- A **subset** of the latest technical data is available on the regional Daikin website (publicly accessible).
- The **full set** of the latest technical data is available on the Daikin Business Portal (authentication required).

Online tools

In addition to the documentation set, some online tools are available for installers:

- **Daikin Technical Data Hub**
  - Central hub for technical specifications of the unit, useful tools, digital resources, and more.
  - Publicly accessible via https://daikintechnicaldatahub.eu.
- **Heating Solutions Navigator**
  - Digital toolbox that offers a variety of tools to facilitate the installation and configuration of heating systems.
  - To access the Heating Solutions Navigator, registration to the Stand By Me platform is required. For more information, see https://professional.standbyme.daikin.eu.
- **Daikin e-Care**
  - Mobile app for installers and service technicians that allows you to register, configure and troubleshoot heating systems.
  - Use the QR codes below to download the mobile app for iOS and Android devices. Registration to the Stand By Me platform is required to access the app.

App Store Google Play

2 Specific installer safety instructions

Always observe the following safety instructions and regulations.

Installation site (see "4.1 Preparing the installation site" [▶ 4])

WARNING
The appliance shall be stored in a room without continuously operating ignition sources (example: open flames, an operating gas appliance or an operating electric heater).

WARNING
DO NOT reuse refrigerant piping that has been used with any other refrigerant. Replace the refrigerant pipes or clean thoroughly.

WARNING
Make sure installation, servicing, maintenance and repair comply with instructions from Daikin and with applicable legislation (for example national gas regulation) and are executed ONLY by authorised persons.

WARNING
- Do NOT pierce or burn refrigerant cycle parts.
- Do NOT use means to accelerate the defrosting process or to clean the equipment, other than those recommended by the manufacturer.
- Be aware that R32 refrigerant does NOT contain an odour.

WARNING
The appliance shall be stored so as to prevent mechanical damage and in a well-ventilated room without continuously operating ignition sources (example: open flames, an operating gas appliance or an operating electric heater) and have a room size as specified below.

WARNING
For units using the R32 refrigerant it is necessary to keep any required ventilation openings clear of obstructions.

Opening and closing the unit (see "4.2 Opening and closing the unit" [▶ 8])

DANGER: RISK OF ELECTROCUTION

DANGER: RISK OF BURNING/SCALDING

Mounting the indoor unit (see "4.3 Mounting the indoor unit" [▶ 9])

WARNING
Fixing method of the indoor unit MUST be in accordance with the instructions from this manual. See "4.3 Mounting the indoor unit" [▶ 9].

Piping installation (see "5 Piping installation" [▶ 10])

WARNING
Field piping MUST be in accordance with the instructions from this manual. See "5 Piping installation" [▶ 10].

Electrical installation (see "6 Electrical installation" [▶ 12])

DANGER: RISK OF ELECTROCUTION

WARNING
Electrical wiring MUST be in accordance with the instructions from this manual. See "6 Electrical installation" [▶ 12].

WARNING
- All wiring MUST be performed by an authorised electrician and MUST comply with the national wiring regulation.
- Make electrical connections to the fixed wiring.
- All components procured on-site and all electrical construction MUST comply with the applicable legislation.

WARNING
ALWAYS use multicore cable for power supply cables.

WARNING
Do NOT extend the power supply or the interconnection cable by using wire connectors, wire connection clamps, taped wires, extension cords.

These can cause overheating, electric shock or fire.

CAUTION
Do NOT push or place redundant cable length into the unit.

WARNING
The backup heater MUST have a dedicated power supply and MUST be protected by the safety devices required by the applicable legislation.

CAUTION
If the indoor unit has a separate tank with a built-in electrical booster heater, use a dedicated power circuit for the backup heater and booster heater. NEVER use a power circuit shared by another appliance. This power circuit MUST be protected with the required safety devices according to the applicable legislation.

CAUTION
To guarantee the unit is completely earthed, ALWAYS connect the backup heater power supply and the earth cable.

Commissioning (see "8 Commissioning" [▸ 32])

WARNING

Commissioning MUST be in accordance with the instructions from this manual. See "8 Commissioning" [▸ 32].

WARNING

Air purging heat emitters or collectors. Before you purge air from heat emitters or collectors, check if 🔔 or ⚠ is displayed on the home screen of the user interface.

- If not, you can purge air immediately.
- If yes, make sure that the room where you want to purge air is sufficiently ventilated. **Reason:** In case of a breakdown, refrigerant might leak into the water circuit, and subsequently into the room when you purge air from the heat emitters or collectors.

3 About the box

Keep the following in mind:

- At delivery, the unit MUST be checked for damage and completeness. Any damage or missing parts MUST be reported immediately to the claims agent of the carrier.
- Bring the packed unit as close as possible to its final installation position to prevent damage during transport.
- Prepare in advance the path along which you want to bring the unit to its final installation position.

3.1 Indoor unit

3.1.1 To remove the accessories from the indoor unit

Some accessories are located inside the unit. For more information on opening the unit, see "4.2.1 To open the indoor unit" [▸ 8].

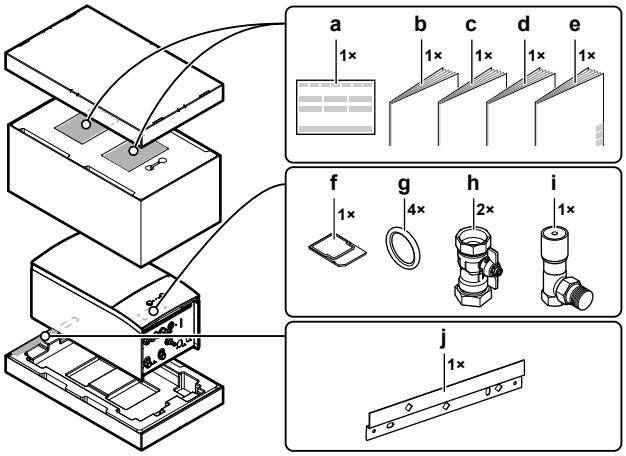

a Declaration of conformity
b General safety precautions
c Addendum book for optional equipment
d Indoor unit installation manual
e Operation manual
f WLAN cartridge
g Sealing ring for shut-off valve
h Shut-off valve
i Differential pressure bypass valve
j Wall bracket

4 Unit installation

4.1 Preparing the installation site

WARNING

The appliance shall be stored in a room without continuously operating ignition sources (example: open flames, an operating gas appliance or an operating electric heater).

WARNING

DO NOT reuse refrigerant piping that has been used with any other refrigerant. Replace the refrigerant pipes or clean thoroughly.

4.1.1 Installation site requirements of the indoor unit

- The indoor unit is designed for indoor installation only and for the following ambient temperatures:
  - Space heating operation: 5~30°C
  - Space cooling operation: 5~35°C
  - Domestic hot water production: 5~35°C

INFORMATION

Cooling is only applicable in case of reversible models.

- Mind the measurement guidelines:

Maximum refrigerant piping length[(a)] between indoor unit and outdoor unit	30 m
Minimum refrigerant piping length[(a)] between indoor unit and outdoor unit	3 m
Maximum height difference between indoor unit and outdoor unit:	
When outdoor unit (ERGA06E▲V3H▼ or ERGA08E▲V3H▼) is at highest location	30 m
When outdoor unit (ERGA04E▲V3▼ or ERGA04~08E▲V3A▼) is at highest location	20 m
When indoor unit is at highest location	20 m
Maximum distance between the 3-way valve and the indoor unit (for installations with domestic hot water tank)	3 m
Maximum distance between the domestic hot water tank and the indoor unit (for installations with domestic hot water tank)	10 m

[(a)] Refrigerant piping length is the one-way length of liquid piping.

- Mind the following spacing installation guidelines:

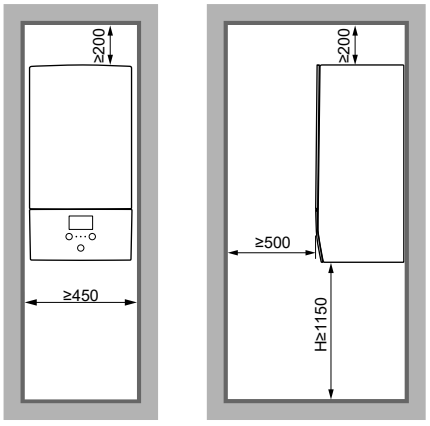

(mm)

H Height measured from the bottom of the casing to the floor

Additionally to the spacing guidelines: The room where you install the indoor unit must also comply with the conditions described in "4.1.3 Installation patterns" [▸ 6].

4.1.2 Special requirements for R32 units

Additionally to the spacing guidelines: The room where you install the indoor unit must also comply with the conditions described in "4.1.3 Installation patterns" [▸ 6].

WARNING

- Do NOT pierce or burn refrigerant cycle parts.
- Do NOT use means to accelerate the defrosting process or to clean the equipment, other than those recommended by the manufacturer.
- Be aware that R32 refrigerant does NOT contain an odour.

WARNING

The appliance shall be stored so as to prevent mechanical damage and in a well-ventilated room without continuously operating ignition sources (example: open flames, an operating gas appliance or an operating electric heater) and have a room size as specified below.

NOTICE

- Do NOT re-use joints and copper gaskets which have been used already.
- Joints made in the installation between parts of the refrigerant system shall be accessible for maintenance purposes.

WARNING

Make sure installation, servicing, maintenance and repair comply with instructions from Daikin and with applicable legislation (for example national gas regulation) and are executed ONLY by authorised persons.

NOTICE

- The pipework shall be securely mounted and guarded protected from physical damage.
- Keep the pipework installation to a minimum.

4.1.3 Installation patterns

WARNING
For units using the R32 refrigerant it is necessary to keep any required ventilation openings clear of obstructions.

Depending on the total refrigerant charge in the system and the type of room in which you install the indoor unit, different installation patterns are allowed:

If…		Then…
Total refrigerant charge in the system	**Room type**	**Allowed patterns**
<1.84 kg (i.e. if the piping length is <27 m)	All	1 (2, 3 and 4 are superfluous. There is no need to check the minimum floor area or to provide ventilation openings.)
≥1.84 kg (i.e. if the piping length is ≥27 m)	Living room, kitchen, garage, attic, basement, storage room	2, 3
	Technical room (i.e. room that is NEVER occupied by persons)	2, 3, 4

	PATTERN 1	PATTERN 2	PATTERN 3	PATTERN 4
	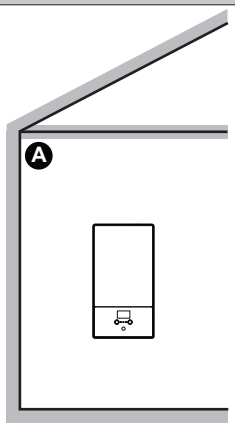	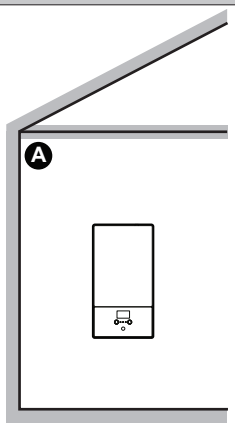	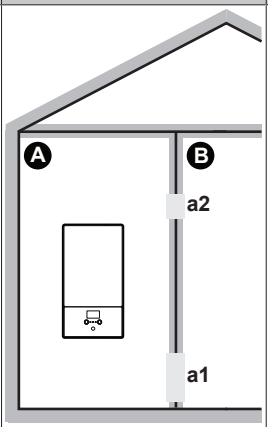	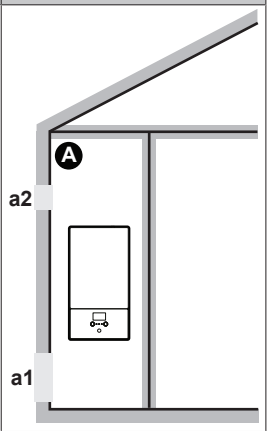
Ventilation openings	N/A	N/A	Between room A and B	Between room A and outside
Minimum floor area	N/A	Room A	Room A + Room B	N/A
Restrictions	See "PATTERN 1" [▸ 6]	See "PATTERN 2 and 3" [▸ 6]		See "PATTERN 4" [▸ 8]

A	Room A (= room where indoor unit is installed)
B	Room B (= adjacent room)

a1	Bottom opening for natural ventilation
a2	Top opening for natural ventilation

PATTERN 1

For PATTERN 1 you only need to comply with the spacing guidelines described in "4.1.1 Installation site requirements of the indoor unit" [▸ 4].

PATTERN 2 and 3

For PATTERN 2 and 3, additionally to the spacing guidelines described in "4.1.1 Installation site requirements of the indoor unit" [▸ 4], you also need to comply with the minimum floor area requirements as described in the following flow chart. The flow chart uses the following tables: "10.3 Table 1 – Maximum refrigerant charge allowed in a room: indoor unit" [▸ 39], "10.4 Table 2 – Minimum floor area: indoor unit" [▸ 39] and "10.5 Table 3 – Minimum bottom opening area for natural ventilation: indoor unit" [▸ 39].

INFORMATION
Multiple indoor units. If two or more indoor units are installed in a room, you must consider the maximum refrigerant charge that can be released in the room when a SINGLE leak occurs. **Example:** If two indoor units are installed in the room, each with its own outdoor unit, then you have to consider the refrigerant charge of the largest indoor-outdoor combination.

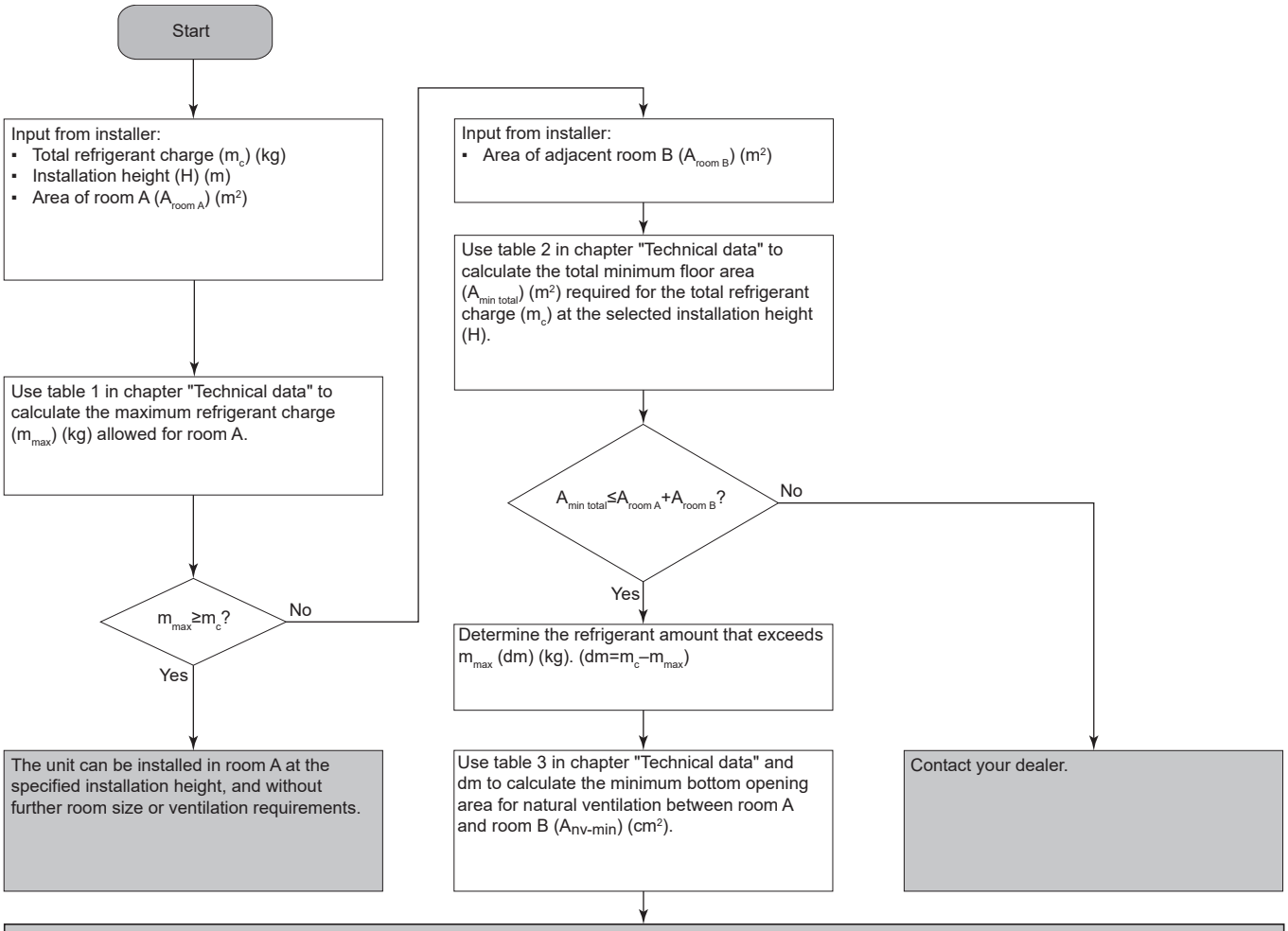

Unit can be installed in **room A** if you provide 2 openings (one at the bottom, one at the top) between room A and B to ensure natural ventilation. The openings must comply with the following conditions:

- **Bottom opening (A_{nv}):**
  - Must be a permanent opening that cannot be closed.
  - Must be completely located between 0 and 300 mm from the floor.
  - Must be $\geq A_{nv\text{-}min}$ (minimum bottom opening area).
  - ≥50% of the required opening area $A_{nv\text{-}min}$ must be ≤200 mm from the floor.
  - The bottom of the opening must be ≤100 mm from the floor.
  - If the opening starts from the floor, the height of the opening must be ≥20 mm.
- **Top opening:**
  - Must be a permanent opening that cannot be closed.
  - Must be ≥50% of $A_{nv\text{-}min}$ (minimum bottom opening area).
  - Must be ≥1.5 m from the floor.

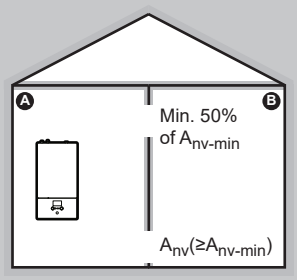

PATTERN 4

PATTERN 4 is only allowed for installations in technical rooms (i.e. room that is NEVER occupied by persons). For this pattern there are no requirements to the minimum floor area if you provide 2 openings (one at the bottom, one at the top) between the room and the outside to ensure natural ventilation. The room must be protected from frost.

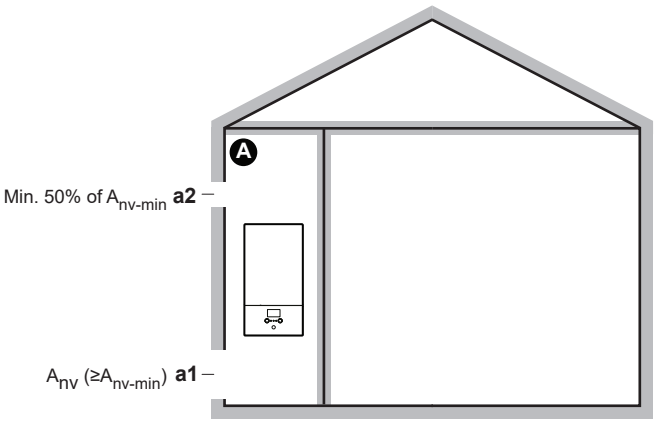

A	Unoccupied room where the indoor unit is installed. Must be protected from frost.
a1	A_{nv}: **Bottom opening** for natural ventilation between the unoccupied room and the outside. ▪ Must be a permanent opening that cannot be closed. ▪ Must be above ground level. ▪ Must be completely located between 0 and 300 mm from the floor of the unoccupied room. ▪ Must be ≥A_{nv-min} (minimum bottom opening area as specified in the table below). ▪ ≥50% of the required opening area A_{nv-min} must be ≤200 mm from the floor of the unoccupied room. ▪ The bottom of the opening must be ≤100 mm from the floor of the unoccupied room. ▪ If the opening starts from the floor, the height of the opening must be ≥20 mm.
a2	**Top opening** for natural ventilation between room A and the outside. ▪ Must be a permanent opening that cannot be closed. ▪ Must be ≥50% of A_{nv-min} (minimum bottom opening area as specified in the table below). ▪ Must be ≥1.5 m from the floor of the unoccupied room.

A_{nv-min} (minimum bottom opening area for natural ventilation)

The minimum bottom opening area for natural ventilation between the unoccupied room and the outside depends on the total refrigerant in the system. For intermediate refrigerant charges, use the row with the higher value. **Example:** If the refrigerant charge is 4.3 kg, use the row of 4.4 kg.

Total refrigerant charge (kg)	A_{nv-min} (dm²)
2	7.2
2.2	7.5
2.4	7.8
2.6	8.2
2.8	8.5
3	8.8
3.2	9.1
3.4	9.3
3.6	9.6
3.8	9.9
4	10.1
4.2	10.4
4.4	10.6
4.6	10.9
4.8	11.1
5	11.3
5.2	11.5
5.4	11.8
5.6	12.0
5.8	12.2

4.2 Opening and closing the unit

4.2.1 To open the indoor unit

Overview

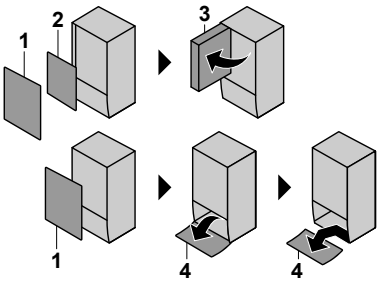

1 Front panel
2 Switch box cover
3 Switch box
4 User interface panel

Open

1 Remove the front panel.

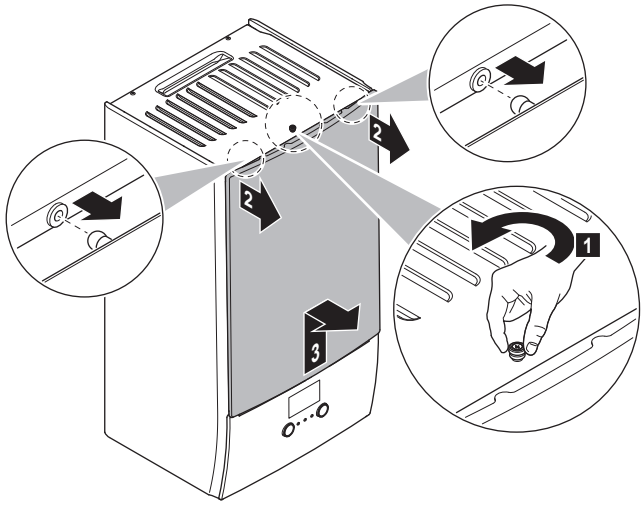

2 If you have to connect electrical wiring, remove the switch box cover.

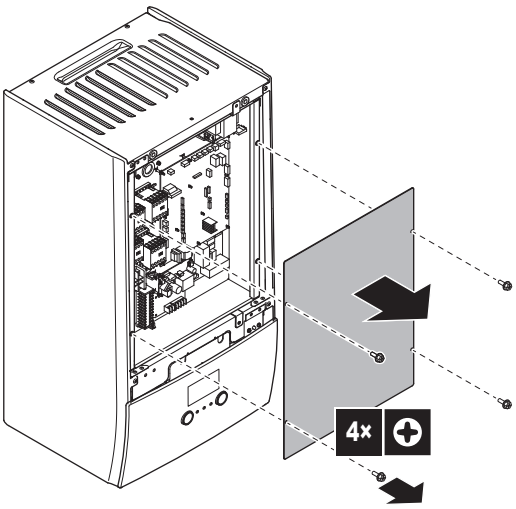

3 If you have to do work behind the switch box, open the switch box.

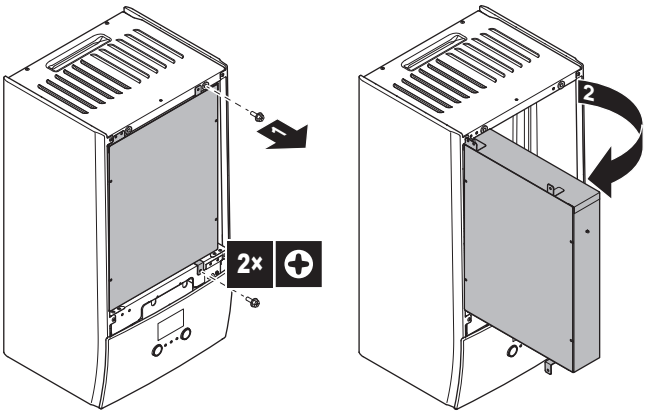

4 If you have to do work behind the user interface panel or upload new software into the user interface, open the user interface panel.

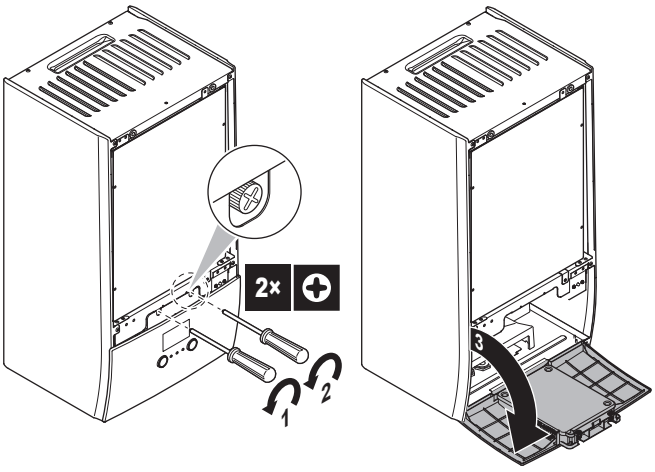

5 Optional: Remove the user interface panel.

NOTICE

If you remove the user interface panel, also disconnect the cables from the back of the user interface panel to prevent damage.

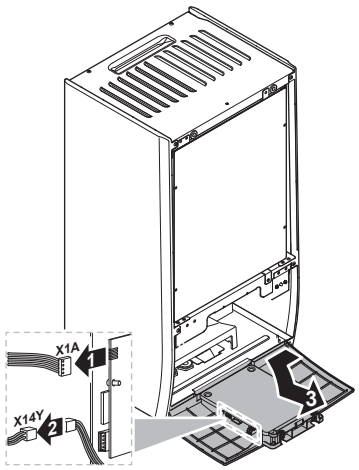

4.2.2 To close the indoor unit

1 Reinstall the user interface panel.

2 Reinstall the switch box cover and close the switch box.

3 Reinstall the front panel.

NOTICE

When closing the indoor unit cover, make sure that the tightening torque does NOT exceed 4.1 N•m.

4.3 Mounting the indoor unit

4.3.1 To install the indoor unit

1 Fix the wall bracket (accessory) to the wall (level) with 2× Ø8 mm bolts.

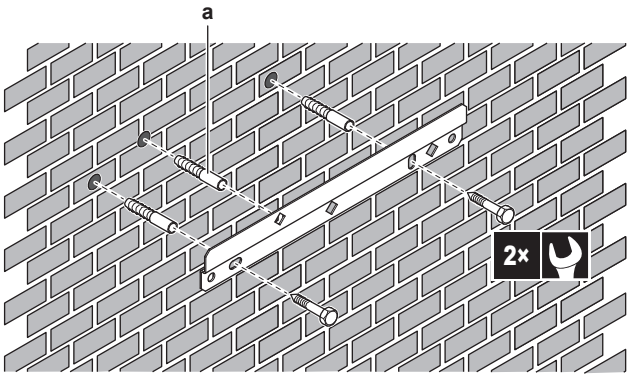

a Recommended: If you want to fix the unit to the wall from inside the unit, provide an additional screw plug.

2 Lift the unit.

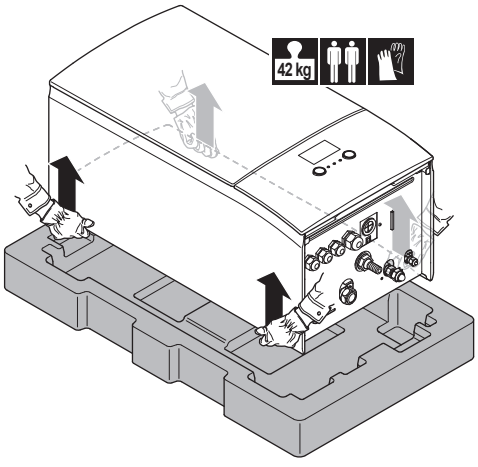

3 Attach the unit to the wall bracket:
- Tilt the top of the unit against the wall at the position of the wall bracket.
- Slide the bracket on the back of the unit over the wall bracket. Make sure the unit is fixed properly.

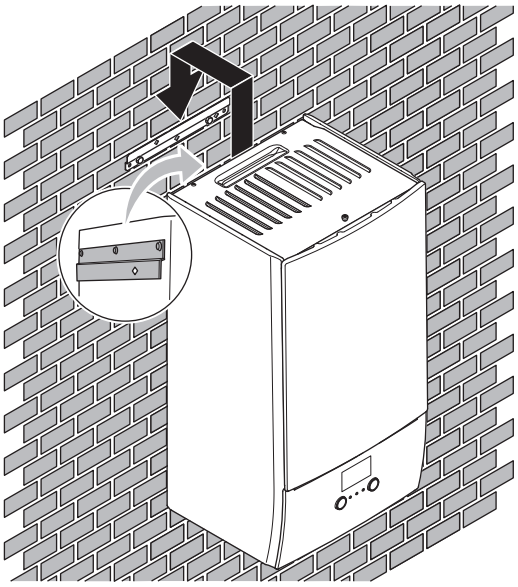

4 Recommended: If you want to fix the unit to the wall from inside the unit:
- Remove the upper front panel, and open the switch box. See "4.2.1 To open the indoor unit" [▸ 8].
- Fix the unit to the wall with an Ø8 mm screw.

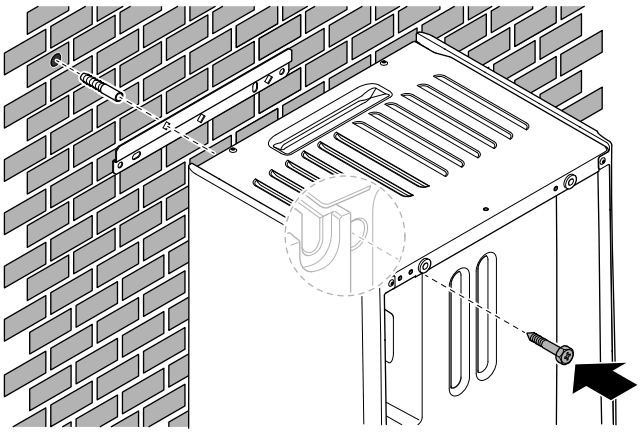

4.3.2 To connect the drain hose to the drain

Water coming from the pressure relief valve is collected in the drain pan. You must connect the drain pan to an appropriate drain according to the applicable legislation.

1 Connect a drain tube (field supply) to the drain pan connector as follows:

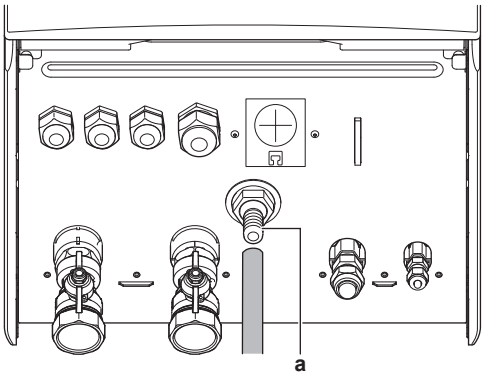

a Drain pan connector

It is recommended to use a tundish to collect the water.

5 Piping installation

5.1 Preparing refrigerant piping

5.1.1 Refrigerant piping requirements

Also see "4.1.2 Special requirements for R32 units" [▸ 5] for additional requirements.

- **Piping length:** See "4.1.1 Installation site requirements of the indoor unit" [▸ 4].

Piping material

Phosphoric acid deoxidised seamless copper

- **Piping connections:** Only flare and brazed connections are allowed. The indoor and outdoor units have flare connections. Connect both ends without brazing. If brazing should be needed, take the guidelines in the installer reference guide into account.

Flare connections

Only use annealed material.

- **Piping diameter:**

Liquid piping	Ø6.4 mm (1/4")
Gas piping	Ø15.9 mm (5/8")

Piping temper grade and thickness

Outer diameter (Ø)	Temper grade	Thickness (t)[a]	
6.4 mm (1/4")	Annealed (O)	≥0.8 mm	
15.9 mm (5/8")	Annealed (O)	≥1.0 mm	

[a] Depending on the applicable legislation and the maximum working pressure of the unit (see "PS High" on the unit name plate), larger piping thickness might be required.

5.1.2 Refrigerant piping insulation

- Use polyethylene foam as insulation material:
  - with a heat transfer rate between 0.041 and 0.052 W/mK (0.035 and 0.045 kcal/mh°C)
  - with a heat resistance of at least 120°C
- Insulation thickness:

Pipe outer diameter ($Ø_p$)	Insulation inner diameter ($Ø_i$)	Insulation thickness (t)
6.4 mm (1/4")	8~10 mm	10 mm
15.9 mm (5/8")	16~20 mm	13 mm

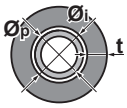

If the temperature is higher than 30°C and the humidity is higher than RH 80%, the thickness of the insulation materials should be at least 20 mm to prevent condensation on the surface of the insulation.

5.2 Connecting refrigerant piping

See the installation manual of the outdoor unit for all guidelines, specifications and installation instructions.

5.2.1 To connect the refrigerant piping to the indoor unit

1 Connect the liquid stop valve from the outdoor unit to the refrigerant liquid connection of the indoor unit.

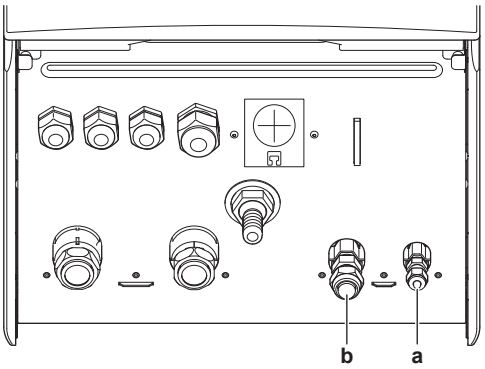

a Refrigerant liquid connection
b Refrigerant gas connection

2 Connect the gas stop valve from the outdoor unit to the refrigerant gas connection of the indoor unit.

5.3 Preparing water piping

NOTICE

In case of plastic pipes, make sure they are fully oxygen diffusion tight according to DIN 4726. The diffusion of oxygen into the piping can lead to excessive corrosion.

NOTICE

Water circuit requirements. Make sure to comply with the water pressure and water temperature requirements below. For additional water circuit requirements, see the installer reference guide.

- **Water pressure – Space heating/cooling circuit.** The maximum water pressure is 3 bar (=0.3 MPa). Provide adequate safeguards in the water circuit to ensure that the maximum pressure is NOT exceeded. The minimum water pressure to operate is 1 bar (=0.1 MPa).
- **Water temperature.** All installed piping and piping accessories (valve, connections,…) MUST withstand the following temperatures:

INFORMATION

The following figure is an example and may NOT completely match your system layout.

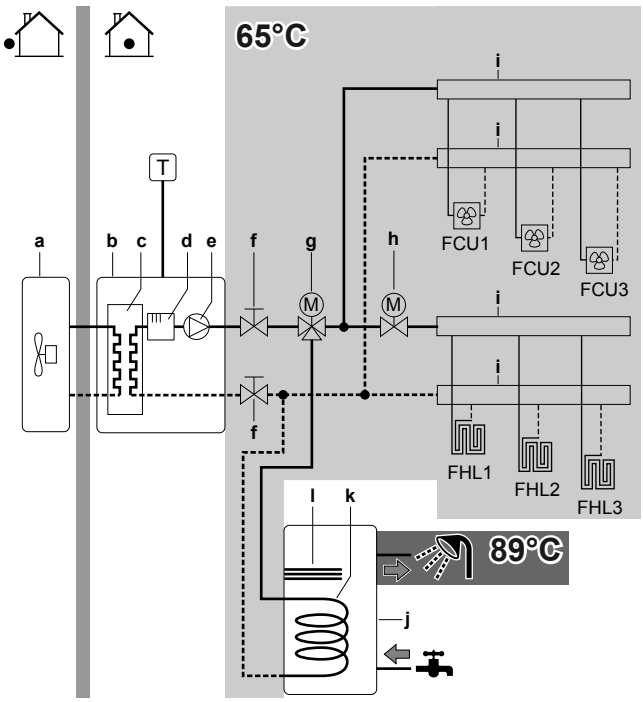

a Outdoor unit
b Indoor unit
c Heat exchanger
d Backup heater
e Pump
f Shut-off valve
g Motorised 3-way valve (supplied with the domestic hot water tank)
h Motorised 2-way valve (field supply)
i Collector
j Domestic hot water tank
k Heat exchanger coil
l Booster heater
FCU1...3 Fan coil unit (optional) (field supply)
FHL1...3 Floor heating loop (field supply)
T Room thermostat (optional) (field supply)

5.3.1 To check the water volume and flow rate

Minimum water volume

The installation needs to be made in such a way that a minimum water volume of 10 litres is always available in the space heating/cooling loop of the unit, even when the available volume towards the unit is reduced because of closure of valves (heat emitters, thermostatic valves, etc.) in the space heating/cooling circuit. The internal water volume of the indoor unit is NOT considered for this minimum water volume.

Minimum flow rate

Check that the minimum flow rate in the installation is guaranteed in all conditions. This minimum flow rate is required during defrost/backup heater operation. For this purpose, use the differential pressure bypass valve delivered with the unit, and respect the minimum water volume.

Minimum required flow rate
12 l/min

NOTICE

When circulation in each or certain space heating loops is controlled by remotely controlled valves, it is important that the minimum flow rate is guaranteed, even if all valves are closed. In case the minimum flow rate cannot be reached, a flow error 7H will be generated (no heating or operation).

See the installer reference guide for more information.

See the recommended procedure as described in "8.2 Checklist during commissioning" [▸ 32].

5.4 Connecting water piping

5.4.1 To connect the water piping

NOTICE

Do NOT use excessive force when connecting the piping. Deformation of the piping can cause malfunctioning of the unit.

To facilitate service and maintenance, 2 shut-off valves and 1 differential pressure bypass valve are provided. Mount the shut-off valves on the space heating water inlet and space heating water outlet. To ensure the minimum flow rate (and prevent overpressure), install the differential pressure bypass valve on the space heating water outlet.

1 Install the shut-off valves on the water pipes.

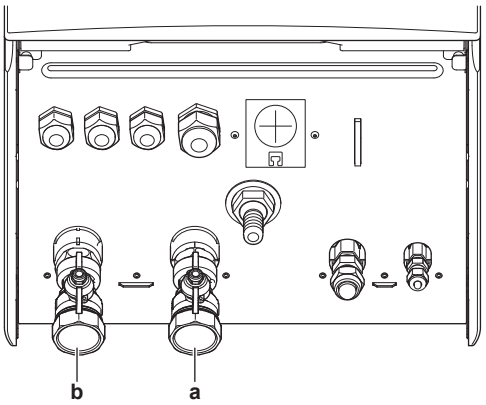

a Water inlet
b Water outlet

2 Screw the indoor unit nuts on the shut-off valves.

3 Connect the field piping on the shut-off valves.

4 In case of connection with the optional domestic hot water tank, see the installation manual of the domestic hot water tank.

NOTICE

Install air purge valves at all local high points.

NOTICE



Differential pressure bypass valve (delivered as accessory). We recommend to install the differential pressure bypass valve in the space heating water circuit.

- Mind the minimum water volume when choosing the installation location of the differential pressure bypass valve (at the indoor unit, or at the collector). See "5.3.1 To check the water volume and flow rate" [▸ 11].
- Mind the minimum flow rate when adjusting the differential pressure bypass valve setting. See "5.3.1 To check the water volume and flow rate" [▸ 11] and "8.2.1 To check the minimum flow rate" [▸ 33].

NOTICE

In case an optional domestic hot water tank is installed: A pressure relief valve (field supply) with an opening pressure of maximum 10 bar (= 1 MPa) must be installed on the domestic cold water inlet connection in accordance with the applicable legislation.

NOTICE

In case an optional domestic hot water tank is installed:

- A drain device and pressure relief device must be installed on the cold water inlet connection of the domestic hot water cylinder.
- To avoid back siphonage, it is recommended to install a non-return valve on the water inlet of the domestic hot water tank in accordance with the applicable legislation. Make sure it is NOT between the pressure relief valve and the DHW tank.
- It is recommended to install a pressure reducing valve on the cold water inlet in accordance with the applicable legislation.
- It is recommended to install an expansion vessel on the cold water inlet in accordance with the applicable legislation.
- It is recommended to install the pressure relief valve on a higher position than the top of the domestic hot water tank. Heating of the domestic hot water tank causes water to expand and without pressure relief valve the water pressure inside the tank can rise above the tank design pressure. Also the field installation (piping, tapping points, etc.) connected to the tank is subjected to this high pressure. To prevent this, a pressure relief valve needs to be installed. The overpressure prevention depends on the correct operation of the field installed pressure relief valve. If this is NOT working correctly, overpressure will deform the tank and water leakage may occur. To confirm good operation, regular maintenance is required.

5.4.2 To fill the water circuit

To fill the water circuit, use a field supply filling kit. Make sure you comply with the applicable legislation.

INFORMATION

Make sure both air purge valves (one on the magnetic filter and one on the backup heater) are open.

5.4.3 To fill the domestic hot water tank

See the installation manual of the domestic hot water tank.

5.4.4 To insulate the water piping

The piping in the complete water circuit MUST be insulated to prevent condensation during cooling operation and reduction of the heating and cooling capacity.

If the temperature is higher than 30°C and the humidity is higher than RH 80%, the thickness of the insulation materials should be at least 20 mm to prevent condensation on the surface of the insulation.

6 Electrical installation

DANGER: RISK OF ELECTROCUTION

WARNING

ALWAYS use multicore cable for power supply cables.

WARNING

Do NOT extend the power supply or the interconnection cable by using wire connectors, wire connection clamps, taped wires, extension cords.

These can cause overheating, electric shock or fire.

NOTICE

In the power supply line, ALWAYS install a residual current device (RCD) that complies with the national wiring regulation. This MUST be an RCD of 30 mA with an instantaneous action, unless otherwise defined by the national wiring regulation.

6.1 About electrical compliance

Only for the backup heater of the indoor unit

See "6.3.2 To connect the backup heater power supply" [▶ 15].

6.2 Guidelines when connecting the electrical wiring

Tightening torques

Indoor unit:

Item	Tightening torque (N•m)
X1M	2.45 ±10%
X2M	0.88 ±10%
X5M	0.88 ±10%
X6M	2.45 ±10%
X7M, X8M	2.45 ±10%
X10M	0.88 ±10%
M4 (earth)	1.47 ±10%

6.3 Connections to the indoor unit

Item	Description
Power supply (main)	See "6.3.1 To connect the main power supply" [▶ 14].
Power supply (backup heater)	See "6.3.2 To connect the backup heater power supply" [▶ 15].
Shut-off valve	See "6.3.3 To connect the shut-off valve" [▶ 17].
Electricity meters	See "6.3.4 To connect the electricity meters" [▶ 17].
Domestic hot water pump	See "6.3.5 To connect the domestic hot water pump" [▶ 18].
Alarm output	See "6.3.6 To connect the alarm output" [▶ 18].
Space cooling/heating operation control	See "6.3.7 To connect the space cooling/heating ON/OFF output" [▶ 19].
Changeover to external heat source control	See "6.3.8 To connect the changeover to external heat source" [▶ 19].
Power consumption digital inputs	See "6.3.9 To connect the power consumption digital inputs" [▶ 20].
Safety thermostat	See "6.3.10 To connect the safety thermostat" [▶ 20].
Smart Grid	See "6.3.11 Smart Grid" [▶ 21].
WLAN cartridge	See "6.3.12 To connect the WLAN cartridge (delivered as accessory)" [▶ 23].
Room thermostat (wired or wireless)	See below table.
	Wires: 0.75 mm² Maximum running current: 100 mA
	For the main zone: ▪ [2.9] `Control` ▪ [2.A] `Ext thermostat type` For the additional zone: ▪ [3.A] `Ext thermostat type` ▪ [3.9] (read-only) `Control`
Heat pump convector	There are different controllers and setups possible for the heat pump convectors. Depending on the setup, you also need to implement a relay (field supply, see addendum book for optional equipment). For more information, see: ▪ Installation manual of the heat pump convectors ▪ Installation manual of the heat pump convector options ▪ Addendum book for optional equipment
	Wires: 0.75 mm² Maximum running current: 100 mA
	For the main zone: ▪ [2.9] `Control` ▪ [2.A] `Ext thermostat type` For the additional zone: ▪ [3.A] `Ext thermostat type` ▪ [3.9] (read-only) `Control`
Remote outdoor sensor	See: ▪ Installation manual of the remote outdoor sensor ▪ Addendum book for optional equipment
	Wires: 2×0.75 mm²
	[9.B.1]=1 (`External sensor` = `Outdoor`) [9.B.2] `Ext. amb. sensor offset` [9.B.3] `Averaging time`
Remote indoor sensor	See: ▪ Installation manual of the remote indoor sensor ▪ Addendum book for optional equipment
	Wires: 2×0.75 mm²
	[9.B.1]=2 (`External sensor` = `Room`) [1.7] `Room sensor offset`
Human Comfort Interface	See: ▪ Installation and operation manual of the Human Comfort Interface ▪ Addendum book for optional equipment
	Wires: 2×(0.75~1.25 mm²) Maximum length: 500 m
	[2.9] `Control` [1.6] `Room sensor offset`
(in case of DHW tank) 3-way valve	See: ▪ Installation manual of the 3-way valve ▪ Addendum book for optional equipment
	Wires: 3×0.75 mm² Maximum running current: 100 mA
	[9.2] `Domestic hot water`

Item	Description
(in case of DHW tank) Domestic hot water tank thermistor	See: ▪ Installation manual of the domestic hot water tank ▪ Addendum book for optional equipment
	Wires: 2 The thermistor and connection wire (12 m) are delivered with the domestic hot water tank.
	[9.2] `Domestic hot water`
(in case of DHW tank) Power supply for booster heater (from indoor unit to thermal protector of booster heater)	See: ▪ Installation manual of the DHW tank ▪ Addendum book for optional equipment
	Wires: (2+GND)×2.5 mm²
	[9.4] `Booster heater`
(in case of DHW tank) Power supply for booster heater (from mains to indoor unit)	See: ▪ Installation manual of the domestic hot water tank ▪ Addendum book for optional equipment
	Wires: 2+GND Maximum running current: 13 A
	[9.4] `Booster heater`
WLAN module	See: ▪ Installation manual of the WLAN module ▪ Addendum book for optional equipment ▪ Installer reference guide
	Use the cable delivered with the WLAN module.
	[D] `Wireless gateway`
LAN adapter	See: ▪ Installation manual of the LAN adapter ▪ Addendum book for optional equipment
	Wires: 2×(0.75~1.25 mm²). Must be sheathed. Maximum length: 200 m
	See installation manual of the LAN adapter

for room thermostat (wired or wireless):

In case of…	See…
Wireless room thermostat	▪ Installation manual of the wireless room thermostat ▪ Addendum book for optional equipment
Wired room thermostat without multi-zoning base unit	▪ Installation manual of the wired room thermostat ▪ Addendum book for optional equipment
Wired room thermostat with multi-zoning base unit	▪ Installation manual of the wired room thermostat (digital or analogue) + multi-zoning base unit ▪ Addendum book for optional equipment ▪ In this case: ▪ You need to connect the wired room thermostat (digital or analogue) to the multi-zoning base unit ▪ You need to connect the multi-zoning base unit to the outdoor unit ▪ For cooling/heating operation, you also need to implement a relay (field supply, see addendum book for optional equipment)

6.3.1 To connect the main power supply

NOTICE

The pump is equipped with an anti-blockage safety routine. This means that the pump operates for a short period of time every 24 hours during long periods of inactivity to ensure it does not get stuck. To enable this function, the unit must be connected to the power supply all year round.

1 Open the following (see "4.2.1 To open the indoor unit" [▶ 8]):

1	Front panel
2	Switch box cover
3	Switch box

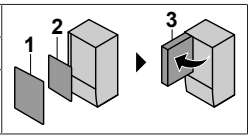

2 Connect the main power supply.

In case of normal kWh rate power supply

	Interconnection cable (= main power supply)	Wires: (3+GND)×1.5 mm²
	—	

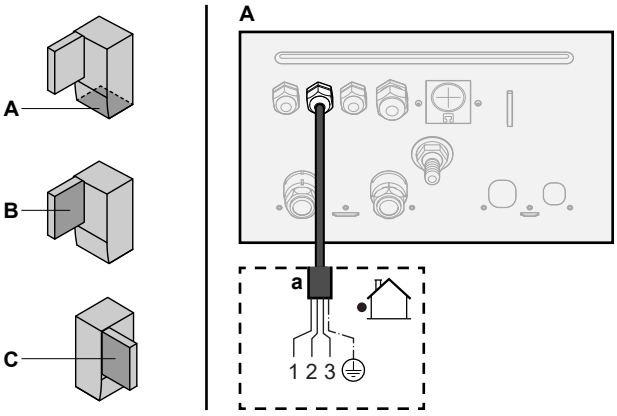

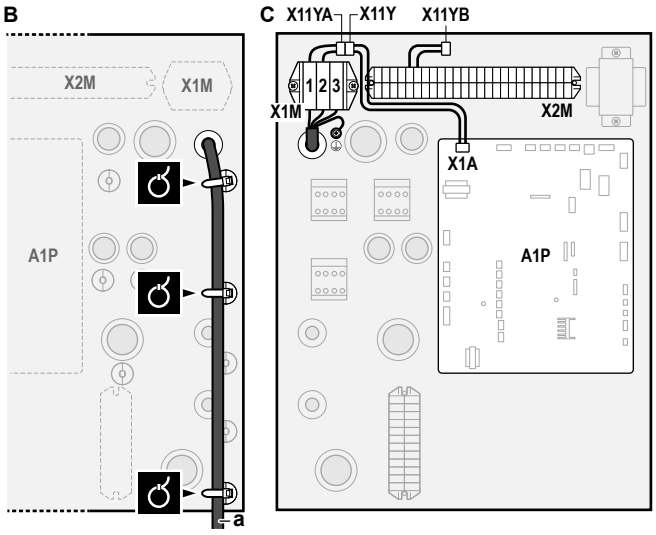

a Interconnection cable (=main power supply)

In case of preferential kWh rate power supply

	Interconnection cable (= main power supply)	Wires: (3+GND)×1.5 mm²
	Normal kWh rate power supply	Wires: 1N Maximum running current: 6.3 A
	Preferential kWh rate power supply contact	Wires: 2×(0.75~1.25 mm²) Maximum length: 50 m. Preferential kWh rate power supply contact: 16 V DC detection (voltage supplied by PCB). The voltage-free contact shall ensure the minimum applicable load of 15 V DC, 10 mA.
	[9.8] `Benefit kWh power supply`	

Connect X11Y to X11YB.

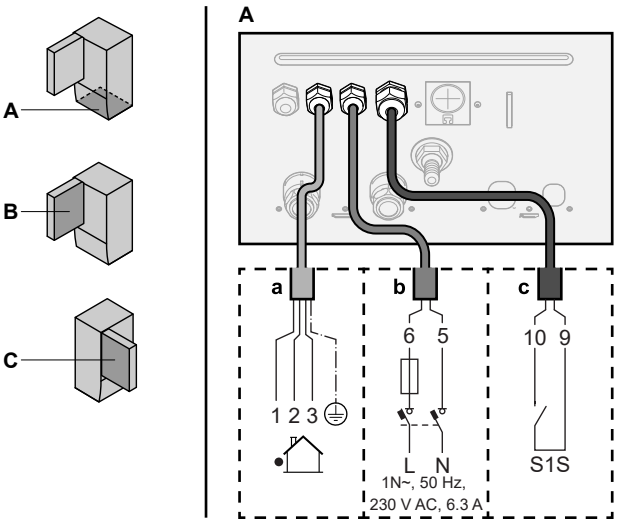

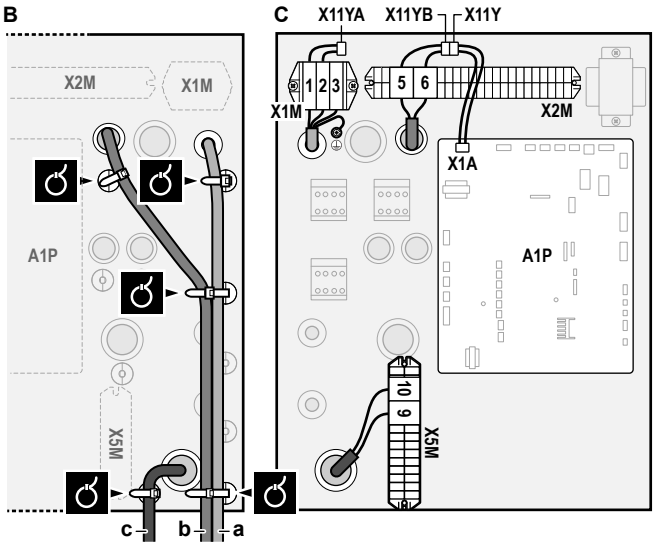

a Interconnection cable (=main power supply)
b Normal kWh rate power supply
c Preferential power supply contact

3 Fix the cables with cable ties to the cable tie mountings.

INFORMATION

In case of preferential kWh rate power supply, connect X11Y to X11YB. The necessity of separate normal kWh rate power supply to indoor unit (b) X2M/5+6 depends on the type of preferential kWh rate power supply.

Separate connection to the indoor unit is required:

- if preferential kWh rate power supply is interrupted when active, OR
- if no power consumption of the indoor unit is allowed at the preferential kWh rate power supply when active.

6.3.2 To connect the backup heater power supply

	Backup heater type	Power supply	Wires
	*6V	1N~ 230 V (6V3)	2+GND
		3~ 230 V (6T1)	3+GND
	*9W	3N~ 400 V	4+GND
	[9.3] `Backup heater`		

WARNING

The backup heater MUST have a dedicated power supply and MUST be protected by the safety devices required by the applicable legislation.

CAUTION

If the indoor unit has a separate tank with a built-in electrical booster heater, use a dedicated power circuit for the backup heater and booster heater. NEVER use a power circuit shared by another appliance. This power circuit MUST be protected with the required safety devices according to the applicable legislation.

CAUTION

To guarantee the unit is completely earthed, ALWAYS connect the backup heater power supply and the earth cable.

The backup heater capacity can vary, depending on the indoor unit model. Make sure that the power supply is in accordance with the backup heater capacity, as listed in the table below.

Backup heater type	Backup heater capacity	Power supply	Maximum running current	Z_{max}
*6V	2 kW	1N~ 230 V[(a)]	9 A	—
	4 kW	1N~ 230 V[(a)]	17 A[(b)(c)]	0.22 Ω
	6 kW	1N~ 230 V[(a)]	26 A[(b)(c)]	0.22 Ω
	2 kW	3~ 230 V[(d)]	5 A	—
	4 kW	3~ 230 V[(d)]	10 A	—
	6 kW	3~ 230 V[(d)]	15 A	—
*9W	3 kW	3N~ 400 V	4 A	—
	6 kW	3N~ 400 V	9 A	—
	9 kW	3N~ 400 V	13 A	—

[(a)] 6V3

[(b)] Electrical equipment complying with EN/IEC 61000-3-12 (European/International Technical Standard setting the limits for harmonic currents produced by equipment connected to public low-voltage systems with input current >16 A and ≤75 A per phase).

[(c)] This equipment complies with EN/IEC 61000-3-11 (European/International Technical Standard setting the limits for voltage changes, voltage fluctuations and flicker in public low-voltage supply systems for equipment with rated current ≤75 A) provided that the system impedance Z_{sys} is less than or equal to Z_{max} at the interface point between the user's supply and the public system. It is the responsibility of the installer or user of the equipment to ensure, by consultation with the distribution network operator if necessary, that the equipment is connected only to a supply with a system impedance Z_{sys} less than or equal to Z_{max}.

[(d)] 6T1

Connect the backup heater power supply as follows:

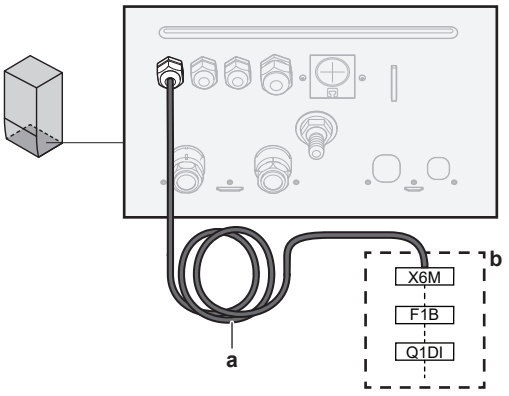

a Factory-mounted cable connected to the contactor of the backup heater, inside the switch box (K5M)

b Field wiring (see table below)

Model (power supply)	Connections to backup heater power supply
*6V (6V3: 1N~ 230 V) PATTERN A Recommended F1B: 4-pole 20 A Wire size[(a)]: Min. 2.5 mm² (AWG13)	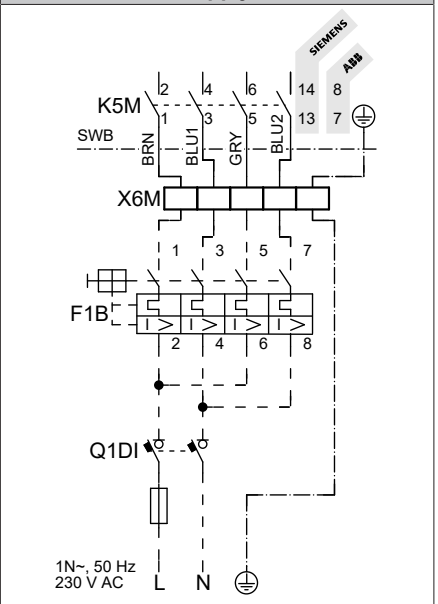
*6V (6V3: 1N~ 230 V) PATTERN B Recommended F1B: 2-pole 32 A Wire size[(a)]: Min. 6 mm² (AWG10)	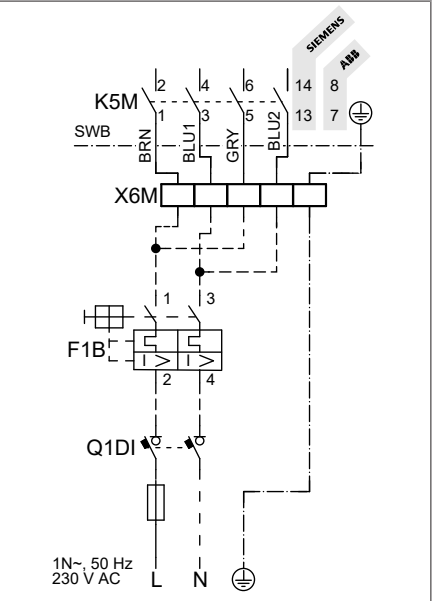
*6V (6T1: 3~ 230 V) Recommended F1B: 4-pole 20 A Wire size[(a)]: Min. 2.5 mm² (AWG13)	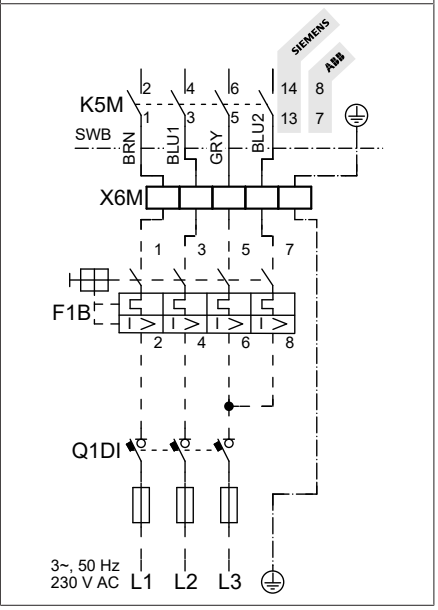

Model (power supply)	Connections to backup heater power supply
*9W (3N~ 400 V) Recommended F1B: 4-pole 20 A Wire size[(a)]: Min. 2.5 mm² (AWG13)	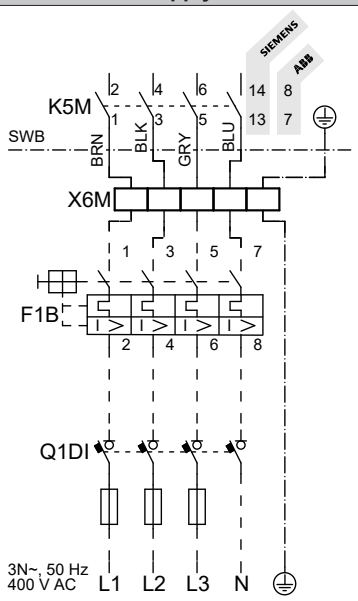

(a) Wire size based on the current, but minimum as specified. MUST comply with national wiring regulation.

F1B Overcurrent fuse (field supply)
K5M Safety contactor (in the switch box)
Q1DI Earth leakage circuit breaker (field supply)
SWB Switch box
X6M Terminal (field supply)

NOTICE

Do NOT cut or remove the backup heater power supply cable.

6.3.3 To connect the shut-off valve

INFORMATION

Shut-off valve usage example. In case of one LWT zone, and a combination of underfloor heating and heat pump convectors, install a shut-off valve before the underfloor heating to prevent condensation on the floor during cooling operation.

	Wires: 2×0.75 mm² Maximum running current: 100 mA 230 V AC supplied by PCB
	[2.D] `Shut off valve`

1 Open the following (see "4.2.1 To open the indoor unit" [▶ 8]):

1	Front panel
2	Switch box cover
3	Switch box

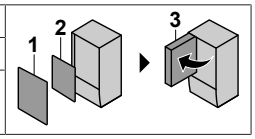

2 Connect the valve control cable to the appropriate terminals as shown in the illustration below.

NOTICE

Wiring is different for a NC (normally closed) valve and a NO (normally open) valve.

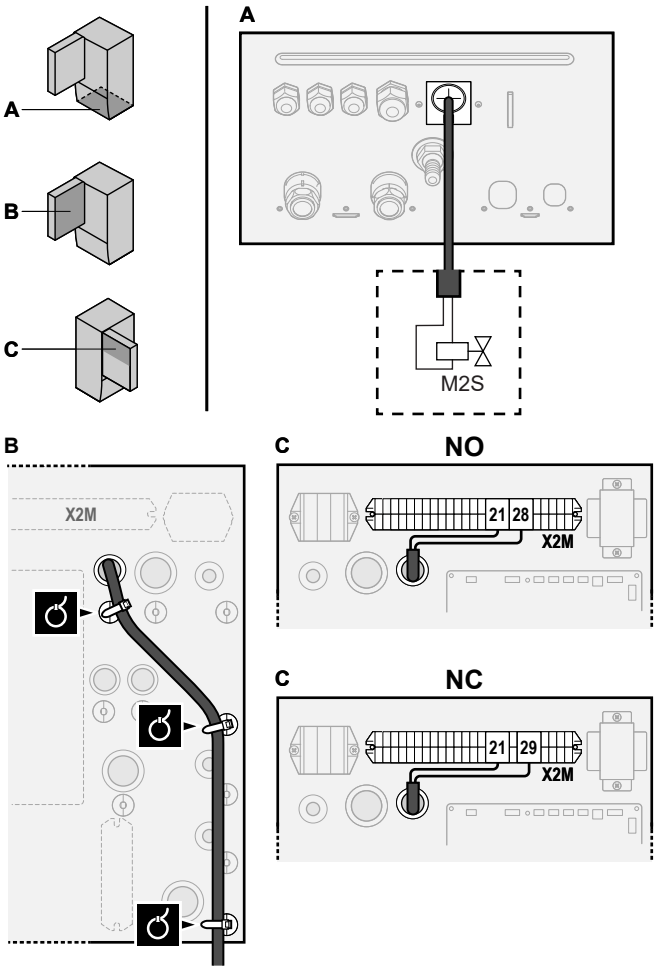

3 Fix the cable with cable ties to the cable tie mountings.

6.3.4 To connect the electricity meters

	Wires: 2 (per meter)×0.75 mm² Electricity meters: 12 V DC pulse detection (voltage supplied by PCB)
	[9.A] `Energy metering`

INFORMATION

In case of an electricity meter with transistor output, check the polarity. The positive polarity MUST be connected to X5M/6 and X5M/4; the negative polarity to X5M/5 and X5M/3.

1 Open the following (see "4.2.1 To open the indoor unit" [▶ 8]):

1	Front panel
2	Switch box cover
3	Switch box

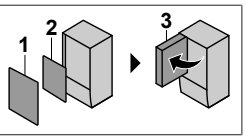

2 Connect the electricity meters cable to the appropriate terminals as shown in the illustration below.

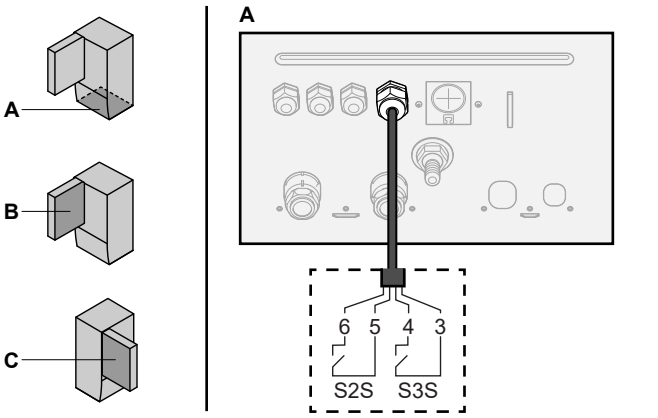

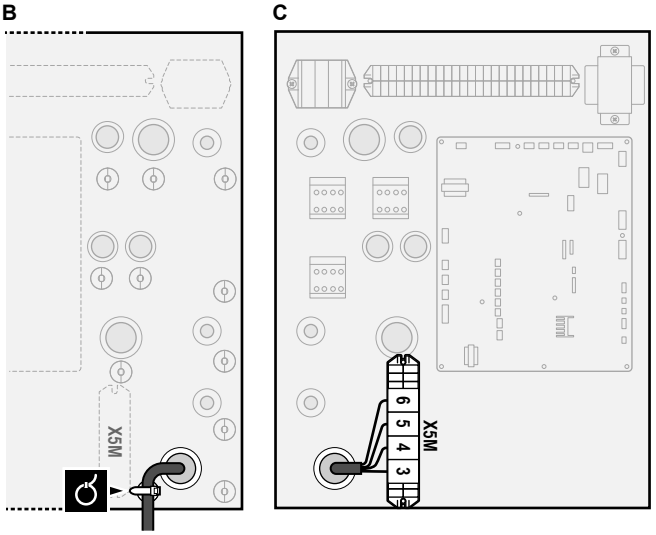

3 Fix the cable with cable ties to the cable tie mountings.

6.3.5 To connect the domestic hot water pump

	Wires: (2+GND)×0.75 mm² DHW pump output. Maximum load: 2 A (inrush), 230 V AC, 1 A (continuous)
	[9.2.2] `DHW pump` [9.2.3] `DHW pump schedule`

1 Open the following (see "4.2.1 To open the indoor unit" [▶ 8]):

1	Front panel
2	Switch box cover
3	Switch box

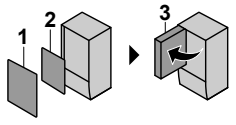

2 Connect the domestic hot water pump cable to the appropriate terminals as shown in the illustration below.

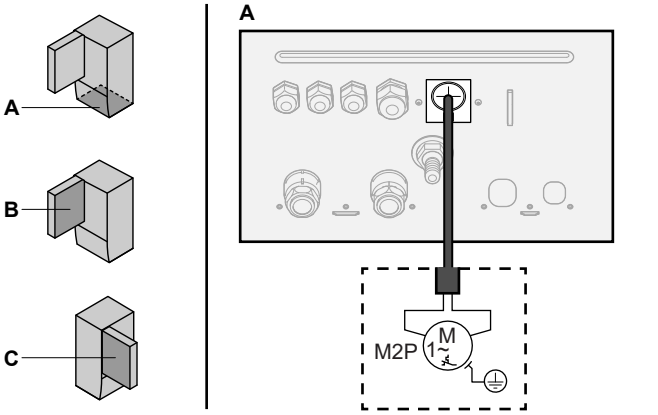

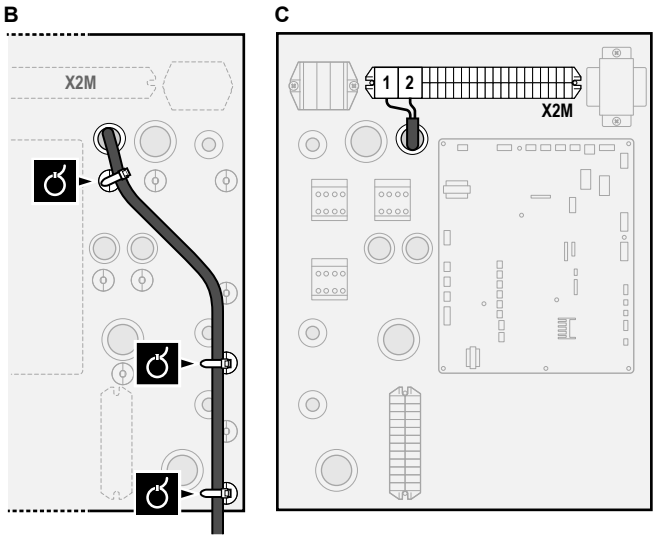

3 Fix the cable with cable ties to the cable tie mountings.

6.3.6 To connect the alarm output

	Wires: (2+1)×0.75 mm² Maximum load: 0.3 A, 250 V AC
	[9.D] `Alarm output`

1 Open the following (see "4.2.1 To open the indoor unit" [▶ 8]):

1	Front panel
2	Switch box cover
3	Switch box

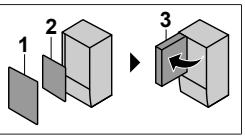

2 Connect the alarm output cable to the appropriate terminals as shown in the illustration below.

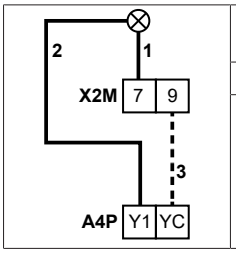

1+2	Wires connected to the alarm output
3	Wire between X2M and A4P
A4P	Installation of EKRP1HBAA is required.

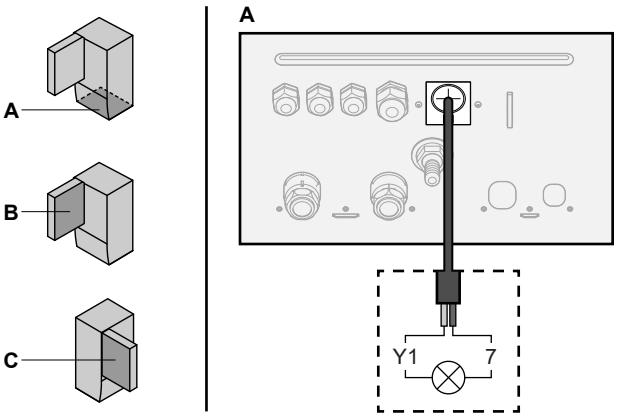

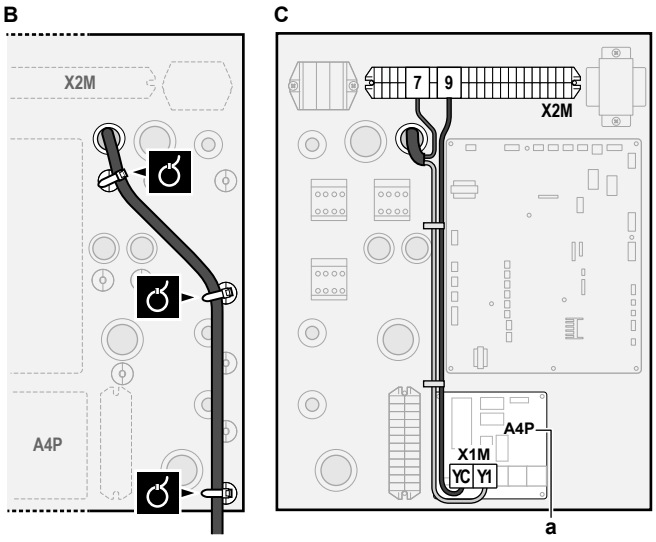

a Installation of EKRP1HBAA is required.

3 Fix the cable with cable ties to the cable tie mountings.

6.3.7 To connect the space cooling/heating ON/OFF output

INFORMATION

Cooling is only applicable in case of reversible models.

	Wires: (2+1)×0.75 mm² Maximum load: 0.3 A, 250 V AC
	—

1 Open the following (see "4.2.1 To open the indoor unit" [▶ 8]):

1	Front panel
2	Switch box cover
3	Switch box

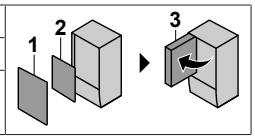

2 Connect the space cooling/heating ON/OFF output cable to the appropriate terminals as shown in the illustration below.

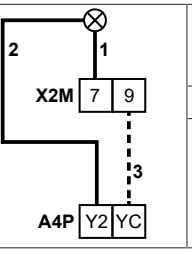

1+2	Wires connected to the space cooling/heating ON/OFF output
3	Wire between X2M and A4P
A4P	Installation of EKRP1HBAA is required.

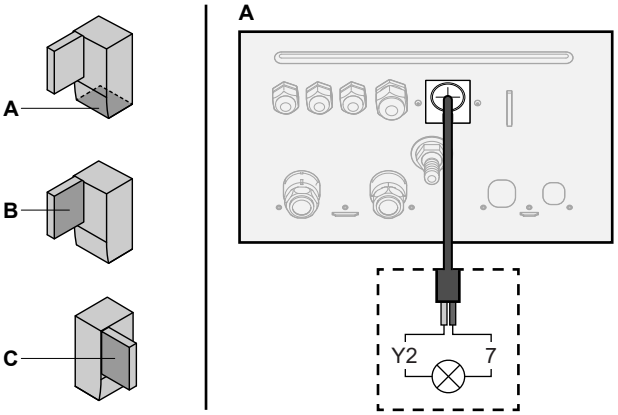

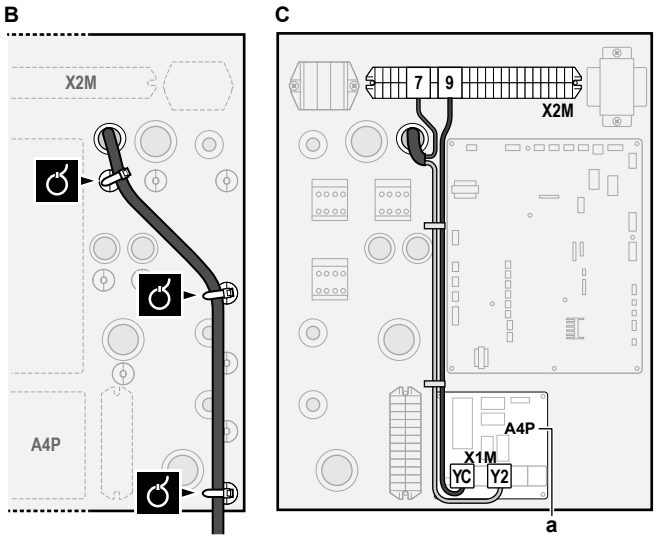

a Installation of EKRP1HBAA is required.

3 Fix the cable with cable ties to the cable tie mountings.

6.3.8 To connect the changeover to external heat source

INFORMATION

Bivalent is ONLY possible in case of ONE leaving water temperature zone with:

- room thermostat control, OR
- external room thermostat control.

	Wires: 2×0.75 mm² Maximum load: 0.3 A, 250 V AC Minimum load: 20 mA, 5 V DC
	[9.C] `Bivalent`

1 Open the following (see "4.2.1 To open the indoor unit" [▶ 8]):

1	Front panel
2	Switch box cover
3	Switch box

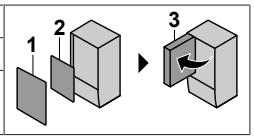

2 Connect the changeover to external heat source cable to the appropriate terminals as shown in the illustration below.

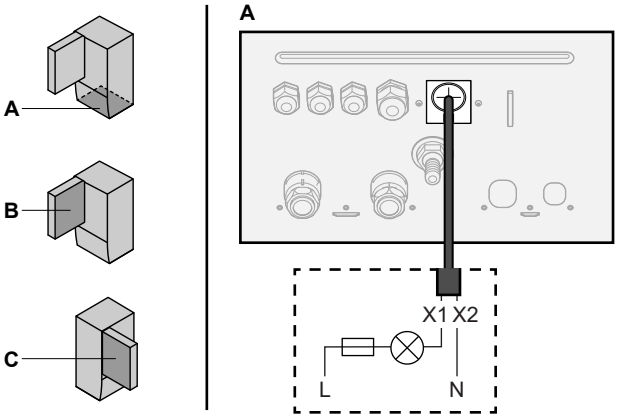

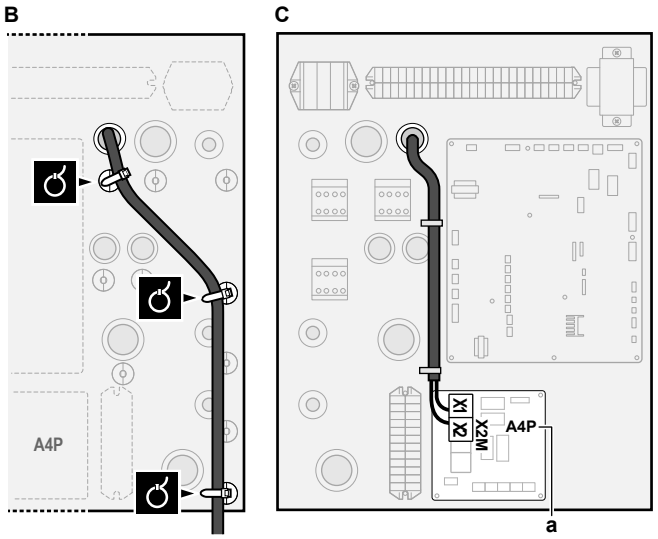

a Installation of EKRP1HBAA is required.

3 Fix the cable with cable ties to the cable tie mountings.

6.3.9 To connect the power consumption digital inputs

	Wires: 2 (per input signal)×0.75 mm² Power limitation digital inputs: 12 V DC / 12 mA detection (voltage supplied by PCB)
	[9.9] `Power consumption control`.

1 Open the following (see "4.2.1 To open the indoor unit" [▶ 8]):

1	Front panel
2	Switch box cover
3	Switch box

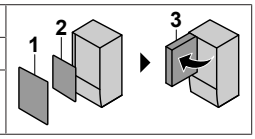

2 Connect the power consumption digital inputs cable to the appropriate terminals as shown in the illustration below.

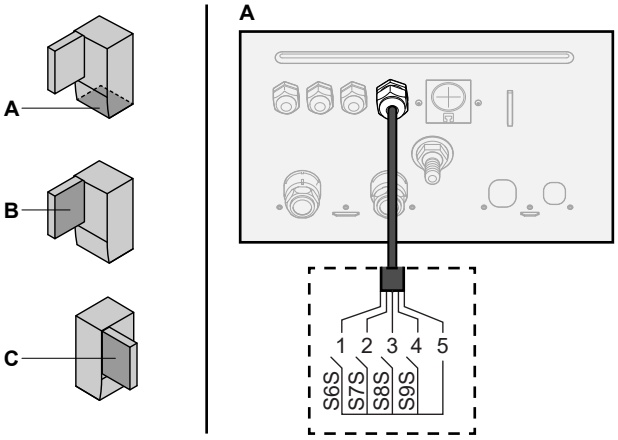

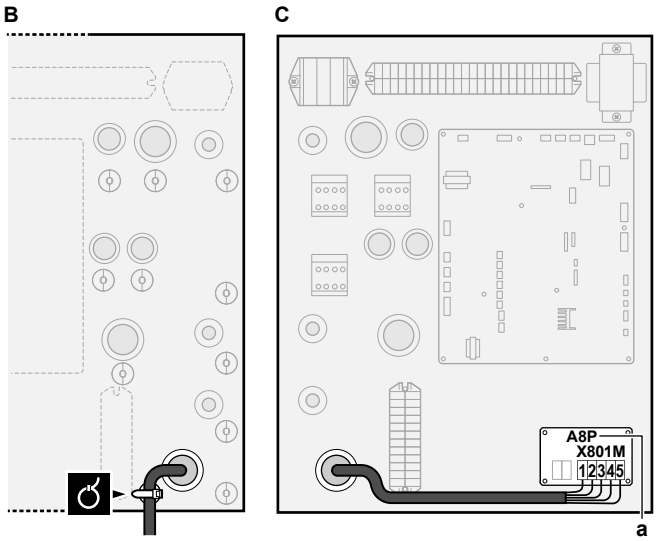

a Installation of EKRP1AHTA is required.

3 Fix the cable with cable ties to the cable tie mountings.

6.3.10 To connect the safety thermostat

Note: Safety thermostat = normally closed contact.

	Wires: 2×0.75 mm² Maximum length: 50 m Safety thermostat contact: 16 V DC detection (voltage supplied by PCB). The voltage-free contact shall ensure the minimum applicable load of 15 V DC, 10 mA.
	—

1 Open the following (see "4.2.1 To open the indoor unit" [▶ 8]):

1	Front panel
2	Switch box cover
3	Switch box

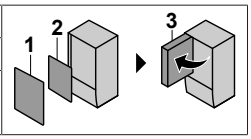

2 Connect the safety thermostat (normally closed) cable to the appropriate terminals as shown in the illustration below.

Note: The jumper wire (factory-mounted) must be removed from the respective terminals.

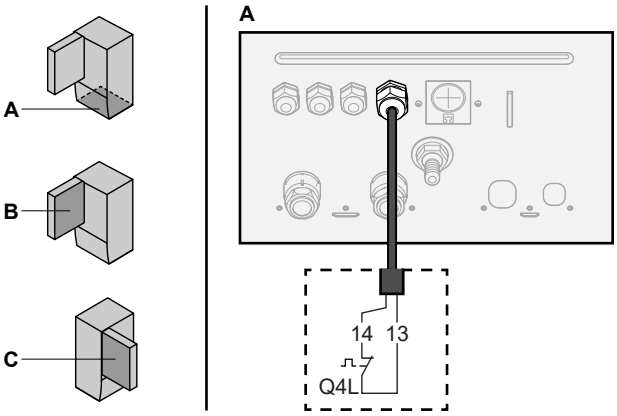

B C

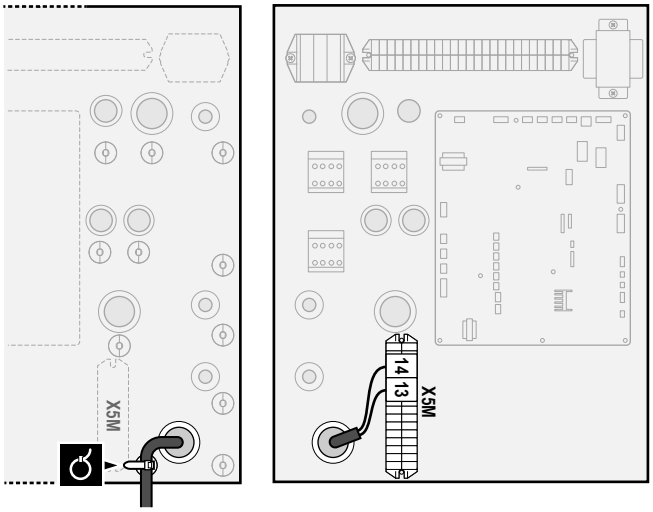

3 Fix the cable with cable ties to the cable tie mountings.

NOTICE

Make sure to select and install the safety thermostat according to the applicable legislation.

In any case, to prevent unnecessary tripping of the safety thermostat, we recommend the following:

- The safety thermostat is automatically resettable.
- The safety thermostat has a maximum temperature variation rate of 2°C/min.
- There is a minimum distance of 2 m between the safety thermostat and the motorized 3-way valve delivered with the domestic hot water tank.

NOTICE

Error. If you remove the jumper (open circuit) but do NOT connect the safety thermostat, stop error 8H-03 will occur.

6.3.11 Smart Grid

This topic describes 2 possible ways to connect the indoor unit to a Smart Grid:

- In case of low voltage Smart Grid contacts
- In case of high voltage Smart Grid contacts. This requires the installation of the Smart Grid relay kit (EKRELSG).

The 2 incoming Smart Grid contacts can activate the following Smart Grid modes:

❶	❷	SG ready 1.0 operation mode
0	0	`Free running`
0	1	`Forced off`
1	0	`Recommended on`
1	1	`Forced on`

❶	❷	SG ready 1.1 operation mode
0	1	Operating state 1
0	0	Operating state 2
1	0	Operating state 3

The use of a Smart Grid pulse meter is not mandatory:

If Smart Grid pulse meter is…	Then [9.8.8] `Limit setting kW` is…
Used ([9.A.2] `Electricity meter 2` ≠ `None`)	Not applicable
Not used ([9.A.2] `Electricity meter 2` = `None`)	Applicable

In case of low voltage Smart Grid contacts

	Wires (Smart Grid pulse meter): 0.5 mm²
	Wires (low voltage Smart Grid contacts): 0.5 mm²
	[9.8.4]=3 (`Benefit kWh power supply` = `Smart Grid`)
	[9.8.5] `Smart Grid operation mode`
	[9.8.6] `Allow electrical heaters`
	[9.8.7] `Enable room buffering`
	[9.8.8] `Limit setting kW`

The wiring of the Smart Grid in case of low voltage contacts is as follows:

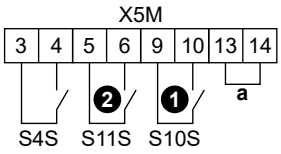

a Jumper (factory-mounted). If you also connect a safety thermostat (Q4L), replace the jumper with the safety thermostat wires.
S4S Smart Grid pulse meter
❶**/S10S** Low voltage Smart Grid contact 1
❷**/S11S** Low voltage Smart Grid contact 2

1 Connect the wiring as follows:

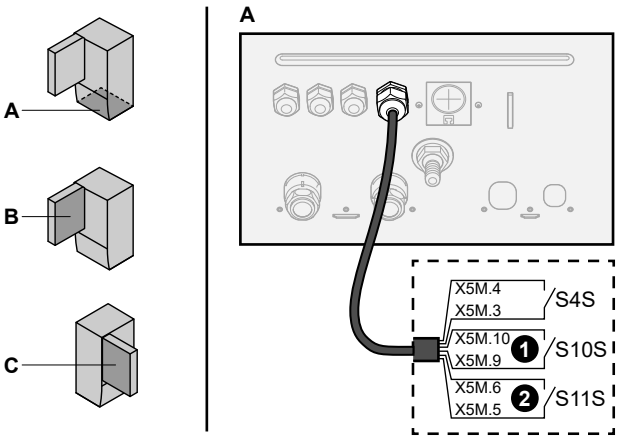

B C

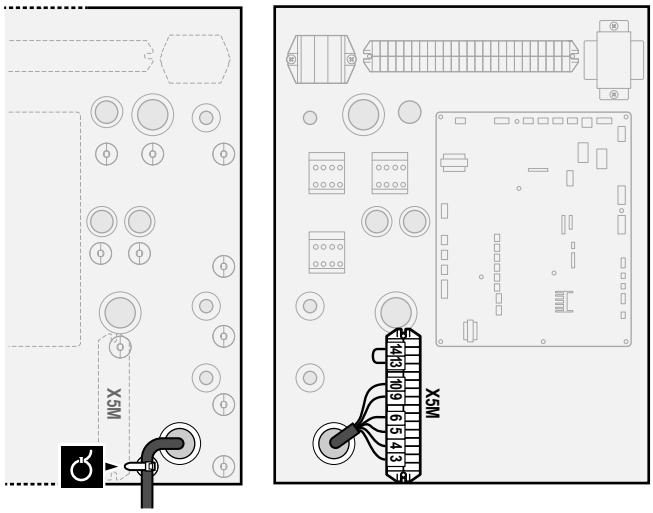

2 Fix the cables with cable ties to the cable tie mountings.

In case of high voltage Smart Grid contacts

	Wires (Smart Grid pulse meter): 0.5 mm²
	Wires (high voltage Smart Grid contacts): 1 mm²

	[9.8.4]=3 (Benefit kWh power supply = Smart Grid)
	[9.8.5] Smart Grid operation mode
	[9.8.6] Allow electrical heaters
	[9.8.7] Enable room buffering
	[9.8.8] Limit setting kW

The wiring of the Smart Grid in case of high voltage contacts is as follows:

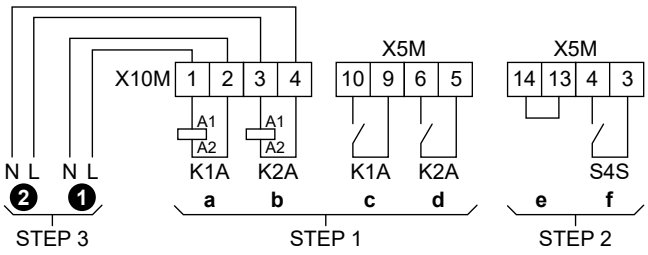

STEP 1 Smart Grid relay kit installation
STEP 2 Low voltage connections
STEP 3 High voltage connections
❶ High voltage Smart Grid contact 1
❷ High voltage Smart Grid contact 2
a, b Coil sides of relays
c, d Contact sides of relays
e Jumper (factory-mounted). If you also connect a safety thermostat (Q4L), replace the jumper with the safety thermostat wires.
f Smart Grid pulse meter

1 Install the components of the Smart Grid relay kit as follows:

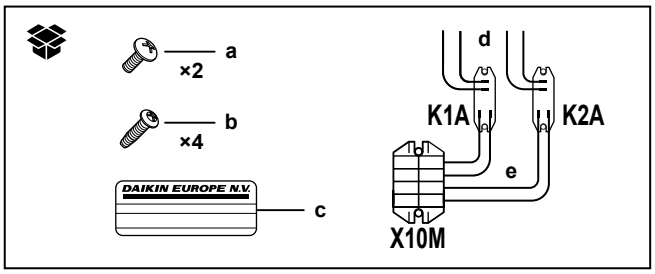

K1A, K2A Relays
X10M Terminal block
a Screws for X10M
b Screws for K1A and K2A
c Sticker to put on the high voltage wires
d Wires between the relays and X5M (AWG22 ORG)
e Wires between the relays and X10M (AWG18 RED)

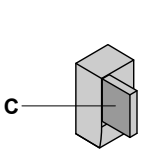

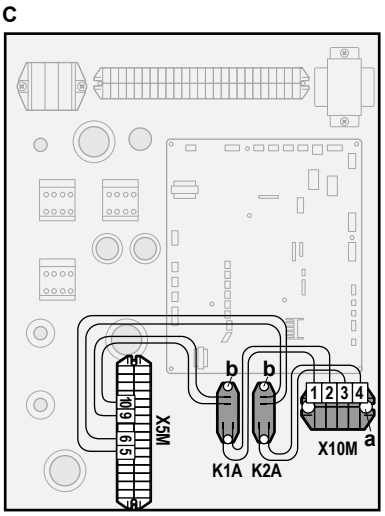

2 Connect the low voltage wiring as follows:

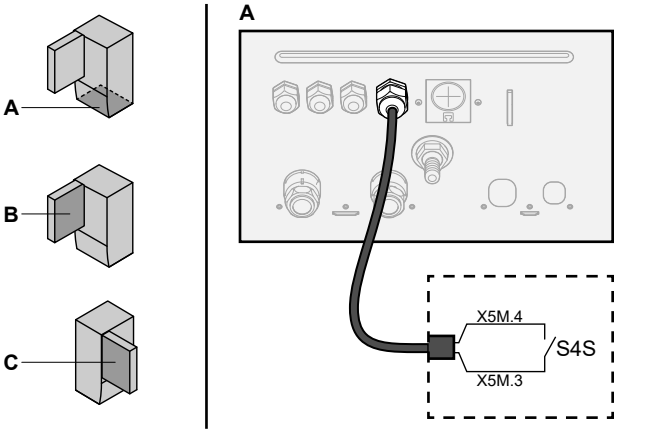

S4S Smart Grid pulse meter

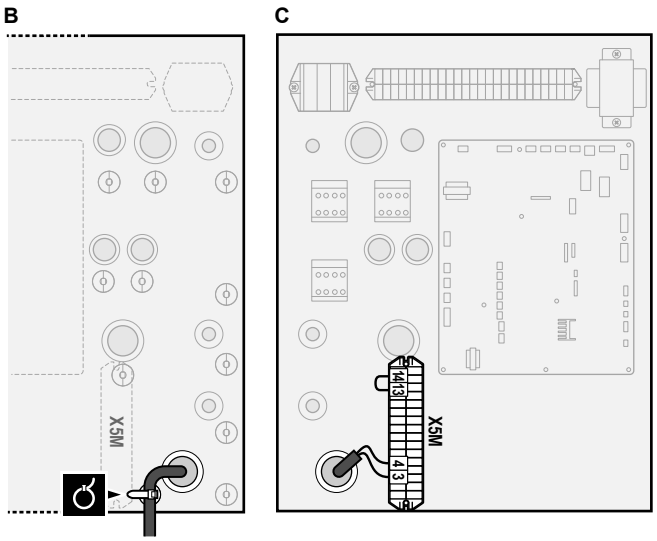

3 Connect the high voltage wiring as follows:

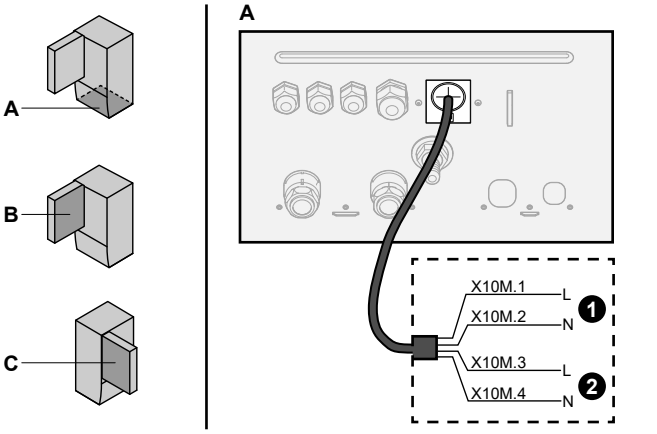

❶ High voltage Smart Grid contact 1
❷ High voltage Smart Grid contact 2

B C

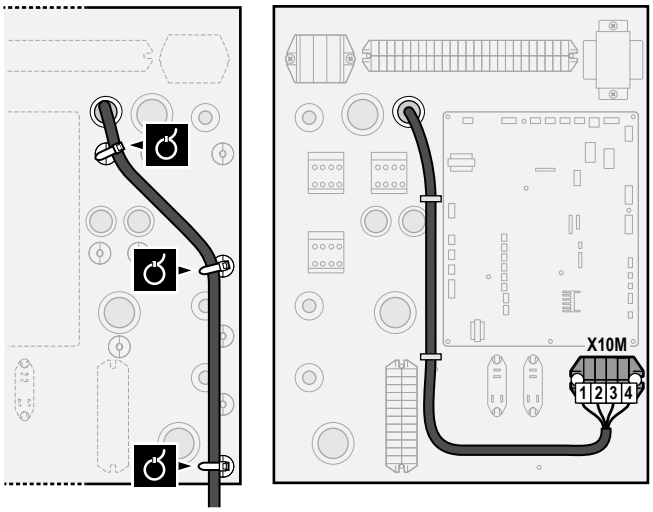

4 Fix the cables with cable ties to the cable tie mountings. If necessary, bundle excessive cable length with a cable tie.

6.3.12 To connect the WLAN cartridge (delivered as accessory)

[D] `Wireless gateway`

1 Insert the WLAN cartridge into the cartridge slot on the user interface of the indoor unit.

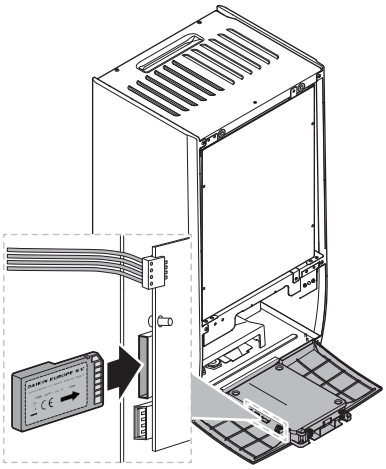

7 Configuration

INFORMATION

Cooling is only applicable in case of reversible models.

7.1 Overview: Configuration

This chapter describes what you have to do and know to configure the system after it is installed.

NOTICE

This chapter explains only the basic configuration. For more detailed explanation and background information, see the installer reference guide.

Why

If you do NOT configure the system correctly, it might NOT work as expected. The configuration influences the following:

- The calculations of the software
- What you can see on and do with the user interface

How

You can configure the system via the user interface.

- **First time – Configuration wizard.** When you turn ON the user interface for the first time (via the unit), the configuration wizard starts to help you configure the system.
- **Restart the configuration wizard.** If the system is already configured, you can restart the configuration wizard. To restart the configuration wizard, go to `Installer settings` > `Configuration wizard`. To access `Installer settings`, see "7.1.1 To access the most used commands" [▸ 23].
- **Afterwards.** If necessary, you can make changes to the configuration in the menu structure or the overview settings.

INFORMATION

When the configuration wizard is finished, the user interface will show an overview screen and request to confirm. When confirmed, the system will restart and the home screen will be displayed.

Accessing settings – Legend for tables

You can access the installer settings using two different methods. However, NOT all settings are accessible via both methods. If so, the corresponding table columns in this chapter are set to N/A (not applicable).

Method	Column in tables
Accessing settings via the breadcrumb in the **home menu screen** or the **menu structure**. To enable breadcrumbs, press the **?** button in the home screen.	**#** For example: [2.9]
Accessing settings via the code in the **overview field settings**.	**Code** For example: [C-07]

See also:

- "To access the installer settings" [▸ 24]
- "7.5 Menu structure: Overview installer settings" [▸ 31]

7.1.1 To access the most used commands

To change the user permission level

You can change the user permission level as follows:

1	Go to [B]: `User profile`. 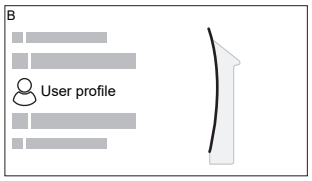	
2	Enter the applicable pin code for the user permission level.	—
	▪ Browse through the list of digits and change the selected digit.	
	▪ Confirm the digit to proceed to the next digit.	or
	▪ OR, move the cursor from left to right.	
	▪ Confirm the pin code and proceed.	

Installer pin code

The `Installer` pin code is **5678**. Additional menu items and installer settings are now available.

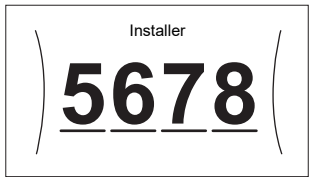

Advanced user pin code

The `Advanced user` pin code is **1234**. Additional menu items for the user are now visible.

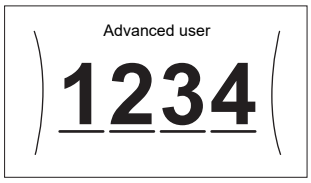

User pin code

The `User` pin code is **0000**.

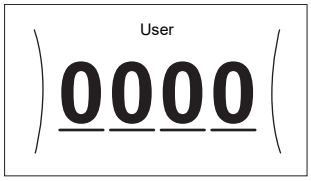

To access the installer settings

1 Set the user permission level to `Installer`.

2 Go to [9]: `Installer settings`.

To modify an overview setting

Example: Modify [1-01] from 15 to 20.

Most settings can be configured via the menu structure. If for any reason it is required to change a setting using the overview settings, then the overview settings can be accessed as follows:

1	Set the user permission level to `Installer`. See "To change the user permission level" [▶ 23].	—
2	Go to [9.I]: `Installer settings` > `Overview field settings`.	
3	Turn the left dial to select the first part of the setting and confirm by pressing the dial. 0 **1** 2 3 / 00 01 02 03 04 / 05 06 07 08 09 / 0A 0B 0C 0D 0E	
4	Turn the left dial to select the second part of the setting **1** / 00 01 **15** 02 03 04 / 05 06 07 08 09 / 0A 0B 0C 0D 0E	
5	Turn the right dial to modify the value from 15 to 20. **1** / 00 01 **20** 02 03 04 / 05 06 07 08 09 / 0A 0B 0C 0D 0E	
6	Press the left dial to confirm the new setting.	
7	Press the center button to go back to the home screen.	

INFORMATION

When you change the overview settings and you go back to the home screen, the user interface will show a popup screen and request to restart the system.

When confirmed, the system will restart and recent changes will be applied.

7.2 Configuration wizard

After first power ON of the system, the user interface starts a configuration wizard. Use this wizard to set the most important initial settings for the unit to run properly. If required, you can afterwards configure more settings. You can change all these settings via the menu structure.

Protective functions

The unit is equipped with the following protective functions:

- Room antifrost [2-06]
- Tank disinfection [2-01]

The unit automatically runs the protective functions when necessary. During installation or service, this behaviour is undesired. Therefore, the protective functions can be disabled. For more information, see the Installer reference guide, chapter Configuration.

7.2.1 Configuration wizard: Language

#	Code	Description
[7.1]	N/A	Language

7.2.2 Configuration wizard: Time and date

#	Code	Description
[7.2]	N/A	Set the local time and date

INFORMATION

By default, daylight savings time is enabled and clock format is set to 24 hours. If you want to change these settings, you can do this in the menu structure (`User settings` > `Time/date`) once the unit is initialised.

7.2.3 Configuration wizard: System

Indoor unit type

The indoor unit type is displayed, but cannot be adjusted.

Backup heater type

The backup heater is adapted to be connected to most common European electricity grids. The type of backup heater must be set on the user interface. For units with a built-in backup heater, the type of heater can be viewed but not changed.

#	Code	Description
[9.3.1]	[E-03]	▪ 3: 6V ▪ 4: 9W

Domestic hot water

The following setting determines if the system can prepare domestic hot water or not, and which tank is used. Set this setting according to the actual installation.

#	Code	Description
[9.2.1]	[E-05][a] [E-06][a] [E-07][a]	▪ No DHW No tank installed. ▪ EKHWS/E, small volume Tank with booster heater installed at the side of the tank, with a volume of 150 l or 180 l. ▪ EKHWS/E, big volume Tank with booster heater installed at the side of the tank, with a volume of 200 l, 250 l or 300 l. ▪ EKHWP/HYC Tank with optional booster heater installed at the top of the tank. ▪ 3rd party, small coil Third-party tank with a coil size larger than 1.05 m². ▪ 3rd party, big coil Third-party tank with a coil size larger than 1.80 m².

[a] Do NOT use [E-05], [E-06] and [E-07] anymore as they are replaced by one menu structure setting [9.2.1].

In case of EKHWP, we recommend to use the following settings:

#	Code	Item	EKHWP
[9.2.1]	[E-07]	Tank type	5: EKHWP/HYC
N/A	[4-05]	Thermistor type	0: Automatic
[5.8]	[6-0E]	Maximum tank temperature	≤70°C

In case of EKHWS*D* / EKHWSU*D*, we recommend to use the following settings:

#	Code	Item	EKHWS*D* / EKHWSU*D*	
			150/180	200/250/300
[9.2.1]	[E-07]	Tank type	0: EKHWS/E, small volume	3: EKHWS/E, big volume
N/A	[4-05]	Thermistor type	0: Automatic	1: Type 1
[5.8]	[6-0E]	Maximum tank temperature	≤60°C	≤75°C

In case of a third-party tank, we recommend to use the following settings:

#	Code	Item	Third-party tank	
			Coil≥1.05 m²	Coil≥1.8 m²
[9.2.1]	[E-07]	Tank type	7: 3rd party, small coil	8: 3rd party, big coil
N/A	[4-05]	Thermistor type	0: Automatic	1: Type 1
[5.8]	[6-0E]	Maximum tank temperature	≤60°C	≤75°C

Emergency

When the heat pump fails to operate, the backup heater and/or booster heater can serve as an emergency heater. It then takes over the heat load either automatically or by manual interaction.

- When Emergency is set to Automatic and a heat pump failure occurs, the backup heater automatically takes over the heat load, and the booster heater in the optional tank takes over the domestic hot water production.
- When Emergency is set to Manual and a heat pump failure occurs, the domestic hot water heating and space heating stops.

  To manually recover it via the user interface, go to the Malfunctioning main menu screen and confirm whether the backup heater and/or booster heater can take over the heat load or not.
- Alternatively, when Emergency is set to:
  - auto SH reduced/DHW on, space heating is reduced but domestic hot water is still available.
  - auto SH reduced/DHW off, space heating is reduced and domestic hot water is NOT available.
  - auto SH normal/DHW off, space heating operates as normally but domestic hot water is NOT available.

  Similarly as in Manual mode, the unit can take the full load with the backup heater and/or booster heater if the user activates this via the Malfunctioning main menu screen.

To keep energy consumption low, we recommend to set Emergency to auto SH reduced/DHW off if the house is unattended for longer periods.

#	Code	Description
[9.5.1]	[4-06]	▪ **0: Manual** ▪ 1: Automatic ▪ 2: auto SH reduced/DHW on ▪ 3: auto SH reduced/DHW off ▪ 4: auto SH normal/DHW off

INFORMATION

The auto emergency setting can be set in the menu structure of the user interface only.

INFORMATION

If [4-03]=1 or 3, then Emergency = Manual is not applicable for the booster heater.

INFORMATION

If a heat pump failure occurs and Emergency is not set to Automatic (setting 1), the following functions will remain active even if the user does NOT confirm emergency operation:

- Room frost protection
- Underfloor heating screed dryout

However, the disinfection function will be activated ONLY if the user confirms emergency operation via the user interface.

Number of zones

The system can supply leaving water to up to 2 water temperature zones. During configuration, the number of water zones must be set.

INFORMATION

Mixing station. If your system layout contains 2 LWT zones, you need to install a mixing station in front of the main LWT zone.

#	Code	Description
[4.4]	[7-02]	▪ 0: Single zone Only one leaving water temperature zone: 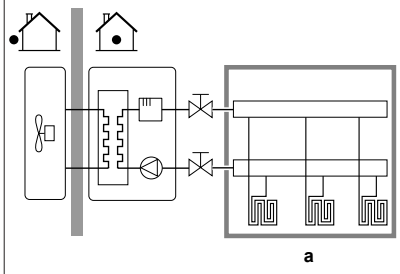 **a** Main LWT zone

#	Code	Description
[4.4]	[7-02]	▪ 1: Dual zone Two leaving water temperature zones. The main leaving water temperature zone consists of the higher load heat emitters and a mixing station to achieve the desired leaving water temperature. In heating: 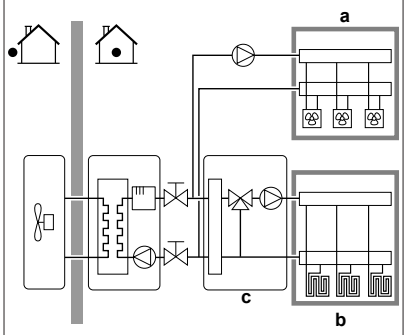 **a** Additional LWT zone: Highest temperature **b** Main LWT zone: Lowest temperature **c** Mixing station

NOTICE

NOT configuring the system in the following way can cause damage to the heat emitters. If there are 2 zones, it is important that in heating:

- the zone with the lowest water temperature is configured as the main zone, and
- the zone with the highest water temperature is configured as the additional zone.

NOTICE

If there are 2 zones and the emitter types are wrongly configured, water of high temperature can be sent towards a low temperature emitter (underfloor heating). To avoid this:

- Install an aquastat/thermostatic valve to avoid too high temperatures towards a low temperature emitter.
- Make sure you set the emitter types for the main zone [2.7] and for the additional zone [3.7] correctly in accordance with the connected emitter.

NOTICE

A differential pressure bypass valve can be integrated in the system. Keep in mind that this valve might not be shown on the illustrations.

7.2.4 Configuration wizard: Backup heater

The backup heater is adapted to be connected to most common European electricity grids. If the backup heater is available, the voltage, configuration and capacity must be set on the user interface.

The capacities for the different steps of the backup heater must be set for the energy metering and/or power consumption control feature to work properly. When measuring the resistance value of each heater, you can set the exact heater capacity and this will lead to more accurate energy data.

Backup heater type

The backup heater is adapted to be connected to most common European electricity grids. The type of backup heater must be set on the user interface. For units with a built-in backup heater, the type of heater can be viewed but not changed.

#	Code	Description
[9.3.1]	[E-03]	▪ 3: 6V ▪ 4: 9W

Voltage

- For a 6V model, this can be set to:
  - 230V, 1ph
  - 230V, 3ph
- For a 9W model, this is fixed to 400V, 3ph.

#	Code	Description
[9.3.2]	[5-0D]	▪ 0: 230V, 1ph ▪ 1: 230V, 3ph ▪ 2: 400V, 3ph

Configuration

The backup heater can be configured in different ways. It can be chosen to have a 1-step only backup heater or a backup heater with 2 steps. If 2 steps, the capacity of the second step depends on this setting. It can also be chosen to have a higher capacity of the second step in emergency.

#	Code	Description
[9.3.3]	[4-0A]	▪ 0: Relay 1 ▪ 1: Relay 1 / Relay 1+2 ▪ 2: Relay 1 / Relay 2 ▪ 3: Relay 1 / Relay 2 Emergency Relay 1+2

INFORMATION

Settings [9.3.3] and [9.3.5] are linked. Changing one setting influences the other. If you change one, check if the other is still as expected.

INFORMATION

During normal operation, e.g. when [4-0A]=1, the capacity of the second step of the backup heater at nominal voltage is equal to [6-03]+[6-04].

INFORMATION

If [4-0A]=3 and emergency mode is active, the power usage of the second step of the backup heater at nominal voltage is equal to [6-03]+[6-04].

Capacity step 1

#	Code	Description
[9.3.4]	[6-03]	▪ The capacity of the first element (Relay 1) of the backup heater at nominal voltage.

Additional capacity step 2

#	Code	Description
[9.3.5]	[6-04]	▪ The capacity of the second element (Relay 2) of the backup heater at nominal voltage.

7.2.5 Configuration wizard: Main zone

The most important settings for the main leaving water zone can be set here.

Emitter type

Heating up or cooling down the main zone can take longer. This depends on:

- The water volume of the system
- The heater emitter type of the main zone

The setting Emitter type can compensate for a slow or a quick heating/cooling system during the heat up/cool down cycle. In room thermostat control, Emitter type influences the maximum modulation of the desired leaving water temperature, and the possibility for usage of the automatic cooling/heating changeover based on the indoor ambient temperature.

It is important to set Emitter type correctly and in accordance with your system layout. The target delta T for the main zone depends on it.

#	Code	Description
[2.7]	[2-0C]	▪ 0: Underfloor heating ▪ 1: Fancoil unit ▪ 2: Radiator

The setting of the emitter type has an influence on the space heating setpoint range and the target delta T in heating as follows:

Description	Space heating set-point range	Target delta T in heating
0: Underfloor heating	Maximum 55°C	Variable
1: Fancoil unit	Maximum 55°C	Variable
2: Radiator	Maximum 65°C	Fixed 10°C

NOTICE

Average emitter temperature = Leaving water temperature – (Delta T)/2

This means that for a same leaving water temperature setpoint, the average emitter temperature of radiators is lower than that of underfloor heating because of a bigger delta T.

Example radiators: 40–10/2=**35°C**

Example underfloor heating: 40–5/2=**37.5°C**

To compensate, you can:

- Increase the weather-dependent curve desired temperatures [2.5].
- Enable leaving water temperature modulation and increase the maximum modulation [2.C].

Control

Define how the operation of the unit is controlled.

Control	In this control...
Leaving water	Unit operation is decided based on the leaving water temperature regardless the actual room temperature and/or heating or cooling demand of the room.
External room thermostat	Unit operation is decided by the external thermostat or equivalent (e.g. heat pump convector).
Room thermostat	Unit operation is decided based on the ambient temperature of the dedicated Human Comfort Interface (BRC1HHDA used as room thermostat).

#	Code	Description
[2.9]	[C-07]	▪ 0: Leaving water ▪ 1: External room thermostat ▪ 2: Room thermostat

Setpoint mode

Define the setpoint mode:

- Fixed: the desired leaving water temperature does not depend on the outdoor ambient temperature.
- In WD heating, fixed cooling mode, the desired leaving water temperature:
  - depends on the outdoor ambient temperature for heating
  - does NOT depend on the outdoor ambient temperature for cooling
- In Weather dependent mode, the desired leaving water temperature depends on the outdoor ambient temperature.

#	Code	Description
[2.4]	N/A	Setpoint mode: ▪ Fixed ▪ WD heating, fixed cooling ▪ Weather dependent

When weather dependent operation is active, low outdoor temperatures will result in warmer water and vice versa. During weather dependent operation, the user can shift the water temperature up or down by a maximum of 10°C.

Schedule

Indicates if the desired leaving water temperature is according to a schedule. Influence of the LWT setpoint mode [2.4] is as follows:

- In Fixed LWT setpoint mode, the scheduled actions consist of desired leaving water temperatures, either preset or custom.
- In Weather dependent LWT setpoint mode, the scheduled actions consist of desired shift actions, either preset or custom.

#	Code	Description
[2.1]	N/A	▪ 0: No ▪ 1: Yes

7.2.6 Configuration wizard: Additional zone

The most important settings for the additional leaving water zone can be set here.

Emitter type

For more info about this functionality, see "7.2.5 Configuration wizard: Main zone" [▸ 26].

#	Code	Description
[3.7]	[2-0D]	▪ 0: Underfloor heating ▪ 1: Fancoil unit ▪ 2: Radiator

Control

The control type is displayed here, but cannot be adjusted. It is determined by the control type of the main zone. For more info about the functionality, see "7.2.5 Configuration wizard: Main zone" [▸ 26].

#	Code	Description
[3.9]	N/A	▪ 0: Leaving water if the control type of the main zone is Leaving water. ▪ 1: External room thermostat if the control type of the main zone is External room thermostat or Room thermostat.

Setpoint mode

For more info about this functionality, see "7.2.5 Configuration wizard: Main zone" [▸ 26].

#	Code	Description
[3.4]	N/A	▪ 0: Fixed ▪ 1: WD heating, fixed cooling ▪ 2: Weather dependent

If you choose WD heating, fixed cooling or Weather dependent, the next screen will be the detailed screen with weather-dependent curves. Also see "7.3 Weather-dependent curve" [▸ 28].

Schedule

Indicates if the desired leaving water temperature is according to a schedule. Also see "7.2.5 Configuration wizard: Main zone" [▸ 26].

#	Code	Description
[3.1]	N/A	▪ 0: No ▪ 1: Yes

7.2.7 Configuration wizard: Tank

This part only applies to systems with an optional domestic hot water tank installed.

Heat up mode

The domestic hot water can be prepared in 3 different ways. They differ from each other by the way the desired tank temperature is set and how the unit acts upon it.

#	Code	Description
[5.6]	[6-0D]	Heat up mode: ▪ 0: Reheat only: Only reheat operation is allowed. ▪ 1: Schedule + reheat: The domestic hot water tank is heated according to a schedule and between the scheduled heat up cycles, reheat operation is allowed. ▪ 2: Schedule only: The domestic hot water tank can ONLY be heated according to a schedule.

See the operation manual for more details.

INFORMATION

Risk of space heating capacity shortage for domestic hot water tank without internal booster heater: In case of frequent domestic hot water operation, frequent and long space heating/cooling interruption will happen when selecting the following:

Tank > Heat up mode > Reheat only.

Settings for Reheat only mode

During Reheat only mode, the tank setpoint can be set on the user interface. The maximum allowed temperature is determined by the following setting:

#	Code	Description
[5.8]	[6-0E]	Maximum: The maximum temperature that users can select for the domestic hot water. You can use this setting to limit the temperature at the hot water taps. The maximum temperature is NOT applicable during disinfection function. See disinfection function.

To set the heat pump ON hysteresis:

#	Code	Description
[5.9]	[6-00]	Heat pump ON hysteresis ▪ 2°C~40°C

Settings for Schedule only mode and Schedule + reheat mode

Comfort setpoint

Only applicable when domestic hot water preparation is Schedule only or Schedule + reheat. When programming the schedule, you can make use of the comfort setpoint as a preset value. When you later want to change the storage setpoint, you only have to do it in one place.

The tank will heat up until the **storage comfort temperature** has been reached. It is the higher desired temperature when a storage comfort action is scheduled.

Additionally, a storage stop can be programmed. This feature puts a stop to tank heating even if the setpoint has NOT been reached. Only program a storage stop when tank heating is absolutely undesirable.

#	Code	Description
[5.2]	[6-0A]	Comfort setpoint: ▪ 30°C~[6-0E]°C

Eco setpoint

The **storage economic temperature** denotes the lower desired tank temperature. It is the desired temperature when a storage economic action is scheduled (preferably during day).

#	Code	Description
[5.3]	[6-0B]	Eco setpoint: ▪ 30°C~min(50,[6-0E])°C

Reheat setpoint

Desired reheat tank temperature, used:

- in Schedule + reheat mode, during reheat mode: the guaranteed minimum tank temperature is set by the Reheat setpoint minus the reheat hysteresis. If the tank temperature drops below this value, the tank is heated up.
- during storage comfort, to prioritize the domestic hot water preparation. When the tank temperature rises above this value, domestic hot water preparation and space heating/cooling are executed sequentially.

#	Code	Description
[5.4]	[6-0C]	Reheat setpoint: ▪ 30°C~min(50,[6-0E])°C

Hysteresis (reheat hysteresis)

Applicable when domestic hot water preparation is scheduled+reheat. When the tank temperature drops below the reheat temperature minus the reheat hysteresis temperature, the tank heats up to the reheat temperature.

#	Code	Description
[5.A]	[6-08]	Reheat hysteresis ▪ 2°C~20°C

7.3 Weather-dependent curve

7.3.1 What is a weather-dependent curve?

Weather-dependent operation

The unit operates 'weather-dependent' if the desired leaving water or tank temperature is determined automatically by the outdoor temperature. It therefore is connected to a temperature sensor on the north wall of the building. If the outdoor temperature drops or rises, the unit compensates instantly. Thus, the unit does not have to wait for feedback by the thermostat to increase or decrease the temperature of the leaving water or tank. Because it reacts more quickly, it prevents high rises and drops of the indoor temperature and water temperature at tap points.

Advantage

Weather-dependent operation reduces energy consumption.

Weather-dependent curve

To be able to compensate for differences in temperature, the unit relies on its weather-dependent curve. This curve defines how much the temperature of the tank or leaving water must be at different outdoor temperatures. Because the slope of the curve depends on local circumstances such as climate and the insulation of the building, the curve can be adjusted by an installer or user.

Types of weather-dependent curve

There are two types of weather-dependent curves:

- 2-points curve
- Slope-offset curve

Which type of curve you use to make adjustments, depends on your personal preference. See "7.3.4 Using weather-dependent curves" [▶ 29].

Availability

The weather-dependent curve is available for:

- Main zone - Heating
- Main zone - Cooling
- Additional zone - Heating
- Additional zone - Cooling
- Tank (only available to installers)

INFORMATION

To operate weather-dependent, correctly configure the setpoint of the main zone, additional zone or tank. See "7.3.4 Using weather-dependent curves" [▶ 29].

7.3.2 2-points curve

Define the weather-dependent curve with these two setpoints:

- Setpoint (X1, Y2)
- Setpoint (X2, Y1)

Example

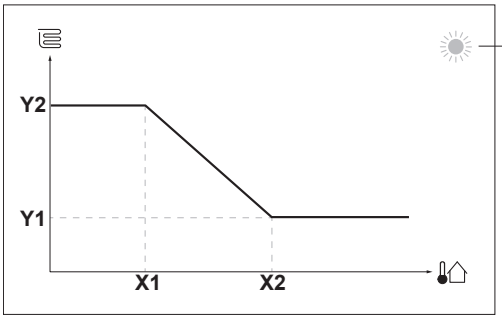

Item	Description
a	Selected weather-dependent zone: ▪ : Main zone or additional zone heating ▪ : Main zone or additional zone cooling ▪ : Domestic hot water
X1, X2	Examples of outdoor ambient temperature
Y1, Y2	Examples of desired tank temperature or leaving water temperature. The icon corresponds to the heat emitter for that zone: ▪ : Underfloor heating ▪ : Fan coil unit ▪ : Radiator ▪ : Domestic hot water tank

Possible actions on this screen	
	Go through the temperatures.
	Change the temperature.
	Go to the next temperature.
	Confirm changes and proceed.

7.3.3 Slope-offset curve

Slope and offset

Define the weather-dependent curve by its slope and offset:

- Change the **slope** to differently increase or decrease the temperature of the leaving water for different ambient temperatures. For example, if leaving water temperature is in general fine but at low ambient temperatures too cold, raise the slope so that leaving water temperature is heated increasingly more at decreasingly lower ambient temperatures.
- Change the **offset** to equally increase or decrease the temperature of the leaving water for different ambient temperatures. For example, if leaving water temperature is always a bit too cold at different ambient temperatures, shift the offset up to equally increase the leaving water temperature for all ambient temperatures.

Examples

Weather-dependent curve when slope is selected:

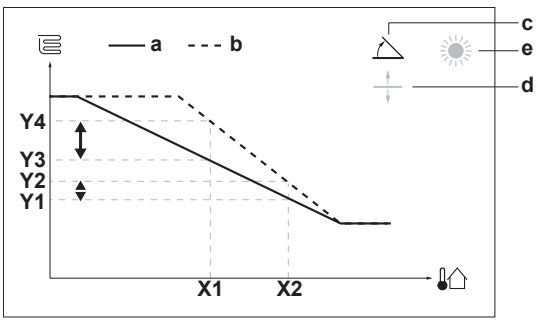

Weather-dependent curve when offset is selected:

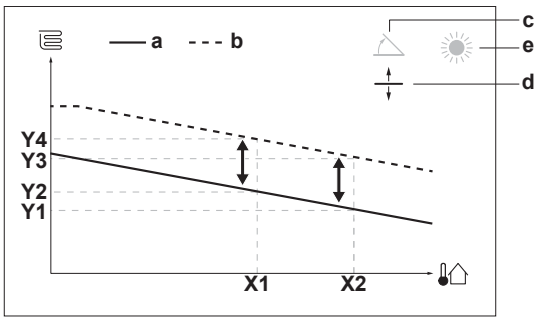

Item	Description
a	WD curve before changes.
b	WD curve after changes (as example): ▪ When slope is changed, the new preferred temperature at X1 is unequally higher than the preferred temperature at X2. ▪ When offset is changed, the new preferred temperature at X1 is equally higher as the preferred temperature at X2.
c	Slope
d	Offset
e	Selected weather-dependent zone: ▪ : Main zone or additional zone heating ▪ : Main zone or additional zone cooling ▪ : Domestic hot water
X1, X2	Examples of outdoor ambient temperature
Y1, Y2, Y3, Y4	Examples of desired tank temperature or leaving water temperature. The icon corresponds to the heat emitter for that zone: ▪ : Underfloor heating ▪ : Fan coil unit ▪ : Radiator ▪ : Domestic hot water tank

Possible actions on this screen	
	Select slope or offset.
	Increase or decrease the slope/offset.
	When slope is selected: set slope and go to offset. When offset is selected: set offset.
	Confirm changes and return to the submenu.

7.3.4 Using weather-dependent curves

Configure weather-dependent curves as following:

To define the setpoint mode

To use the weather-dependent curve, you need to define the correct setpoint mode:

Go to setpoint mode …	Set the setpoint mode to …
Main zone – Heating	
[2.4] `Main zone > Setpoint mode`	`WD heating, fixed cooling` OR `Weather dependent`
Main zone – Cooling	
[2.4] `Main zone > Setpoint mode`	`Weather dependent`
Additional zone – Heating	
[3.4] `Additional zone > Setpoint mode`	`WD heating, fixed cooling` OR `Weather dependent`
Additional zone – Cooling	
[3.4] `Additional zone > Setpoint mode`	`Weather dependent`

Go to setpoint mode …	Set the setpoint mode to …
Tank	
[5.B] Tank > Setpoint mode	**Restriction:** Only available to installers. Weather dependent

To change the type of weather-dependent curve

To change the type for all zones (main + additional) and for the tank, go to [2.E] Main zone > WD curve type.

Viewing which type is selected is also possible via:

- [3.C] Additional zone > WD curve type
- [5.E] Tank > WD curve type

  Restriction: Only available to installers.

To change the weather-dependent curve

Zone	Go to …
Main zone – Heating	[2.5] Main zone > Heating WD curve
Main zone – Cooling	[2.6] Main zone > Cooling WD curve
Additional zone – Heating	[3.5] Additional zone > Heating WD curve
Additional zone – Cooling	[3.6] Additional zone > Cooling WD curve
Tank	**Restriction:** Only available to installers. [5.C] Tank > WD curve

INFORMATION

Maximum and minimum setpoints

You cannot configure the curve with temperatures that are higher or lower than the set maximum and minimum setpoints for that zone or for the tank. When the maximum or minimum setpoint is reached, the curve flattens out.

To fine-tune the weather-dependent curve: slope-offset curve

The following table describes how to fine-tune the weather-dependent curve of a zone or tank:

You feel …		Fine-tune with slope and offset:	
At regular outdoor temperatures …	At cold outdoor temperatures …	Slope	Offset
OK	Cold	↑	—
OK	Hot	↓	—
Cold	OK	↓	↑
Cold	Cold	—	↑
Cold	Hot	↓	↑
Hot	OK	↑	↓
Hot	Cold	↑	↓
Hot	Hot	—	↓

To fine-tune the weather-dependent curve: 2-points curve

The following table describes how to fine-tune the weather-dependent curve of a zone or tank:

You feel …		Fine-tune with set-points:			
At regular outdoor temperatures …	At cold outdoor temperatures …	Y2[a]	Y1[a]	X1[a]	X2[a]
OK	Cold	↑	—	↑	—
OK	Hot	↓	—	↓	—
Cold	OK	—	↑	—	↑
Cold	Cold	↑	↑	↑	↑
Cold	Hot	↓	↑	↓	↑
Hot	OK	—	↓	—	↓
Hot	Cold	↑	↓	↑	↓
Hot	Hot	↓	↓	↓	↓

[a] See "7.3.2 2-points curve" [▶ 28].

7.4 Settings menu

You can set additional settings using the main menu screen and its submenus. The most important settings are presented here.

7.4.1 Main zone

Ext thermostat type

Only applicable in external room thermostat control.

NOTICE

If an external room thermostat is used, the external room thermostat will control the room frost protection. However, the room frost protection is only possible if [C.2] Space heating/cooling=On.

#	Code	Description
[2.A]	[C–05]	External room thermostat type for the main zone: ▪ 1: 1 contact: The used external room thermostat can only send a thermo ON/OFF condition. There is no separation between heating or cooling demand. ▪ 2: 2 contacts: The used external room thermostat can send a separate heating/cooling thermo ON/OFF condition.

7.4.2 Additional zone

Ext thermostat type

Only applicable in external room thermostat control. For more info about the functionality, see "7.4.1 Main zone" [▶ 30].

#	Code	Description
[3.A]	[C–06]	External room thermostat type for the additional zone: ▪ 1: 1 contact ▪ 2: 2 contacts

7.4.3 Information

Dealer information

The installer can fill in his contact number here.

#	Code	Description
[8.3]	N/A	Number that users can call in case of problems.

7.5 Menu structure: Overview installer settings

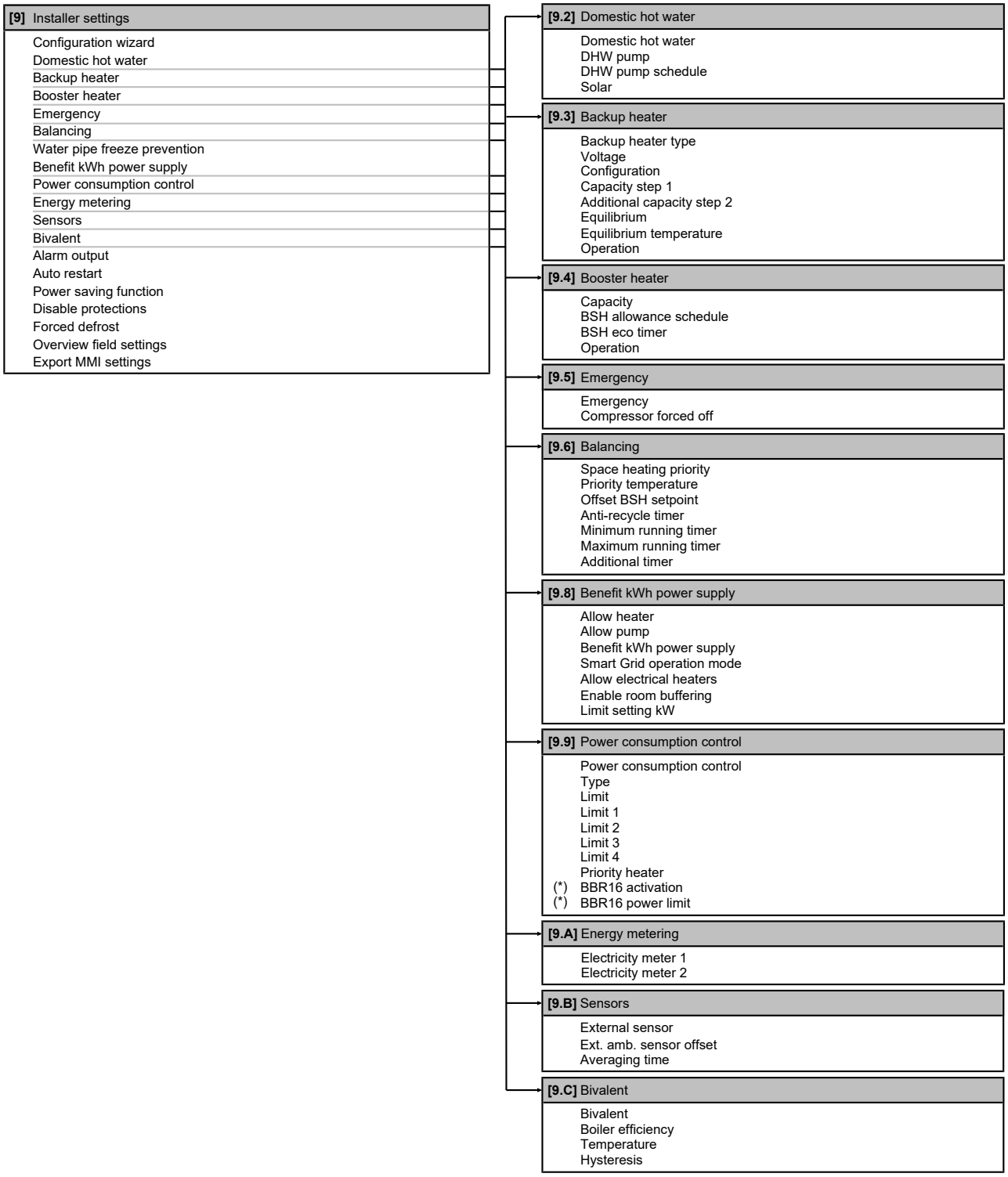

(*) Only applicable in Swedish language.

INFORMATION

Solar kit settings are shown but are NOT applicable for this unit. Settings shall NOT be used or changed.

INFORMATION

Depending on the selected installer settings and unit type, settings will be visible/invisible.

8 Commissioning

NOTICE

General commissioning checklist. Next to the commissioning instructions in this chapter, a general commissioning checklist is also available on the Daikin Business Portal (authentication required).

The general commissioning checklist is complementary to the instructions in this chapter and can be used as a guideline and reporting template during commissioning and hand-over to the user.

NOTICE

ALWAYS operate the unit with thermistors and/or pressure sensors/switches. If NOT, burning of the compressor might be the result.

NOTICE

The pump is equipped with an anti-blockage safety routine. This means that the pump operates for a short period of time every 24 hours during long periods of inactivity to ensure it does not get stuck. To enable this function, the unit must be connected to the power supply all year round.

NOTICE

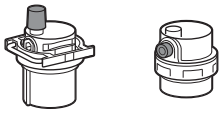

Make sure both air purge valves within the indoor unit (one on the magnetic filter and one on the backup heater) are open.

All automatic air purge valves MUST remain open after commissioning.

INFORMATION

Protective functions – "Installer-on-site mode". The software is equipped with protective functions, such as room antifrost. The unit automatically runs these functions when necessary.

During installation or service this behaviour is undesired. Therefore, the protective functions can be disabled:

- **At first power-on:** The protective functions are disabled by default. After 12 hours they will be automatically enabled.
- **Afterwards:** An installer can manually disable the protective functions by setting [9.G]: `Disable protections=Yes`. After his work is done, he can enable the protective functions by setting [9.G]: `Disable protections=No`.

Also see "Protective functions" [▸ 24].

8.1 Checklist before commissioning

1 After the installation of the unit, check the items listed below.

2 Close the unit.

3 Power up the unit.

☐	You read the complete installation instructions, as described in the **installer reference guide**.
☐	The **indoor unit** is properly mounted.
☐	The **outdoor unit** is properly mounted.
☐	The following **field wiring** has been carried out according to this document and the applicable legislation: ▪ Between the local supply panel and the outdoor unit ▪ Between indoor unit and outdoor unit ▪ Between the local supply panel and the indoor unit ▪ Between the indoor unit and the valves (if applicable) ▪ Between the indoor unit and the room thermostat (if applicable) ▪ Between the indoor unit and the domestic hot water tank (if applicable)
☐	The system is properly **earthed** and the earth terminals are tightened.
☐	The **fuses**, **circuit breakers**, or **locally installed protection devices** are of the size and type specified in this document, and have NOT been bypassed.
☐	The **power supply voltage** matches the voltage on the identification label of the unit.
☐	There are NO **loose connections** or damaged electrical components in the switch box.
☐	There are NO **damaged components** or **squeezed pipes** on the inside of the indoor and outdoor units.
☐	**Backup heater circuit breaker** F1B (field supply) is turned ON.
☐	Only for tanks with built-in booster heater: **Booster heater circuit breaker** F2B (field supply) is turned ON.
☐	There are NO **refrigerant leaks**.
☐	The **refrigerant pipes** (gas and liquid) are thermally insulated.
☐	The correct pipe size is installed and the **pipes** are properly insulated.
☐	There is NO **water leak** inside the indoor unit.
☐	The **shut-off valves** are properly installed and fully open.
☐	The **stop valves** (gas and liquid) on the outdoor unit are fully open.
☐	The **air purge** valve is open (at least 2 turns).
☐	The **pressure relief valve** (space heating circuit) purges water when opened. Clean water MUST come out.
☐	The **minimum water volume** is guaranteed in all conditions. See "To check the water volume and flow rate" in "5.3 Preparing water piping" [▸ 11].
☐	(if applicable) The **domestic hot water tank** is filled completely.

8.2 Checklist during commissioning

☐	To check that the **minimum flow rate** during backup heater/defrost operation is guaranteed in all conditions. See "To check the water volume and flow rate" in "5.3 Preparing water piping" [▸ 11].
☐	To perform an **air purge**.
☐	To perform an **actuator test run**.
☐	To perform a **test run**.
☐	To perform (start) an **underfloor screed dryout** (if necessary).

8.2.1 To check the minimum flow rate

1	Check the hydraulic configuration to find out which space heating loops can be closed by mechanical, electronic, or other valves.	—
2	Close all space heating loops that can be closed.	—
3	Start the pump test run (see "8.2.3 To perform an actuator test run" [▶ 33]).	—
4	Read out the flow rate[a] and modify the bypass valve setting to reach the minimum required flow rate + 2 l/min.	—

[a] During pump test run, the unit can operate below the minimum required flow rate.

Minimum required flow rate
12 l/min

8.2.2 To perform an air purge

Conditions: Make sure all operation is disabled. Go to [C]: `Operation` and turn off `Space heating/cooling` and `Tank` operation.

1	Set the user permission level to Installer. See "To change the user permission level" [▶ 23].	—
2	Go to [A.3]: `Commissioning` > `Air purge`.	
3	Select `OK` to confirm. **Result:** The air purge starts. It stops automatically when air purge cycle is finished.	
	To stop the air purge manually:	—
	1 Go to `Stop air purge`.	
	2 Select `OK` to confirm.	

Air purging heat emitters or collectors

We recommend to purge air with the unit's air purge function (see above). However, if you purge air from the heat emitters or collectors, mind the following:

WARNING

Air purging heat emitters or collectors. Before you purge air from heat emitters or collectors, check if 🔔 or ⚠ is displayed on the home screen of the user interface.

- If not, you can purge air immediately.
- If yes, make sure that the room where you want to purge air is sufficiently ventilated. **Reason:** In case of a breakdown, refrigerant might leak into the water circuit, and subsequently into the room when you purge air from the heat emitters or collectors.

8.2.3 To perform an actuator test run

Purpose

Perform an actuator test run to confirm the operation of the different actuators. For example, when you select `Pump`, a test run of the pump will start.

Conditions: Make sure all operation is disabled. Go to [C]: `Operation` and turn off `Space heating/cooling` and `Tank` operation.

1	Set the user permission level to Installer. See "To change the user permission level" [▶ 23].	—
2	Go to [A.2]: `Commissioning` > `Actuator test run`.	
3	Select a test from the list. **Example:** `Pump`.	
4	Select `OK` to confirm. **Result:** The actuator test run starts. It stops automatically when ready (±30 min).	
	To stop the test run manually:	—
	1 In the menu, go to `Stop test run`.	
	2 Select `OK` to confirm.	

Possible actuator test runs

- `Booster heater` test
- `Backup heater 1` test
- `Backup heater 2` test
- `Pump` test

INFORMATION

Make sure that all air is purged before executing the test run. Also avoid disturbances in the water circuit during the test run.

- `Shut off valve` test
- `Diverter valve` test (3-way valve for switching between space heating and tank heating)
- `Bivalent signal` test
- `Alarm output` test
- `C/H signal` test
- `DHW pump` test

8.2.4 To perform an operation test run

Conditions: Make sure all operation is disabled. Go to [C]: `Operation` and turn off `Space heating/cooling` and `Tank` operation.

1	Set the user permission level to `Installer`. See "To change the user permission level" [▶ 23].	—
2	Go to [A.1]: `Commissioning` > `Operation test run`.	
3	Select a test from the list. **Example:** `Heating`.	
4	Select `OK` to confirm. **Result:** The test run starts. It stops automatically when ready (±30 min).	
	To stop the test run manually:	—
	1 In the menu, go to `Stop test run`.	
	2 Select `OK` to confirm.	

INFORMATION

If the outdoor temperature is outside the range of operation, the unit may NOT operate or may NOT deliver the required capacity.

To monitor leaving water and tank temperatures

During test run, the correct operation of the unit can be checked by monitoring its leaving water temperature (heating/cooling mode) and tank temperature (domestic hot water mode).

To monitor the temperatures:

1	In the menu, go to `Sensors`.	
2	Select the temperature information.	

8.2.5 To perform an underfloor heating screed dryout

Conditions: Make sure all operation is disabled. Go to [C]: `Operation` and turn off `Space heating/cooling` and `Tank` operation.

1	Set the user permission level to Installer. See "To change the user permission level" [▶ 23].	—
2	Go to [A.4]: `Commissioning` > `UFH screed dryout`.	
3	Set a dryout program: go to `Program` and use the UFH screed dryout programming screen.	
4	Select `OK` to confirm. **Result:** The underfloor heating screed dryout starts. It stops automatically when done.	
	To stop the test run manually:	—
	1 Go to `Stop UFH screed dryout`.	
	2 Select `OK` to confirm.	

NOTICE

To perform an underfloor heating screed dryout, room frost protection needs to be disabled ([2-06]=0). By default, it is enabled ([2-06]=1). However, due to the "installer-on-site" mode (see "Commissioning"), room frost protection will be automatically disabled for 12 hours after the first power-on.

If the screed dryout still needs to be performed after the first 12 hours of power-on, manually disable room frost protection by setting [2-06] to "0", and KEEP it disabled until the screed dryout has finished. Ignoring this notice will result in cracking of the screed.

NOTICE

For the underfloor heating screed dryout to be able to start, make sure the following settings are met:

- [4-00]=1
- [C-02]=0
- [D-01]=0
- [4-08]=0
- [4-01]≠1

9 Hand-over to the user

Once the test run is finished and the unit operates properly, make sure the following is clear for the user:

- Fill in the installer setting table (in the operation manual) with the actual settings.
- Make sure that the user has the printed documentation and ask him/her to keep it for future reference. Inform the user that he/she can find the complete documentation at the URL mentioned earlier in this manual.
- Explain to the user how to properly operate the system and what to do in case of problems.
- Show the user what to do for the maintenance of the unit.
- Explain about energy saving tips to the user as described in the operation manual.

10 Technical data

A **subset** of the latest technical data is available on the regional Daikin website (publicly accessible). The **full set** of the latest technical data is available on the Daikin Business Portal (authentication required).

10.1 Piping diagram: Indoor unit

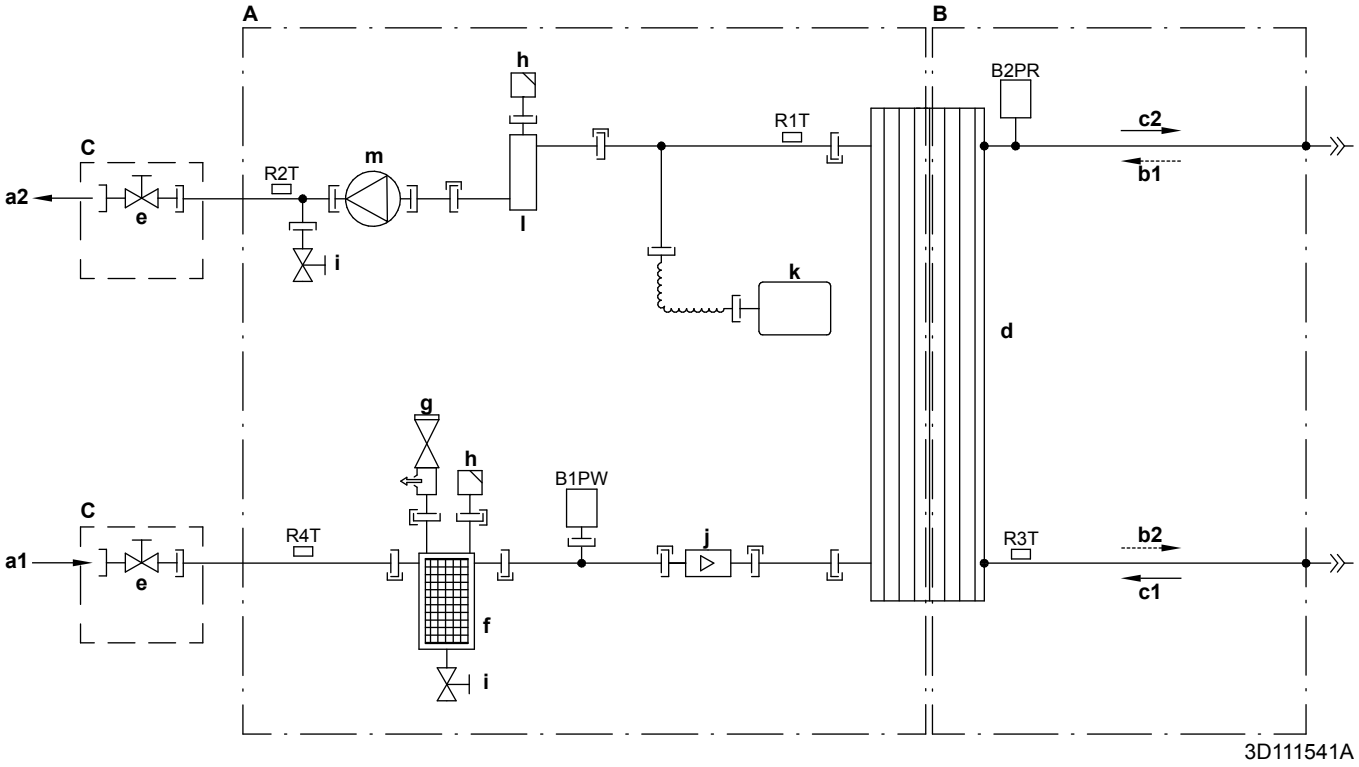

A	Water side
B	Refrigerant side
C	Field installed
a1	Space heating water IN
a2	Space heating water OUT
b1	Gas refrigerant IN (heating mode; condenser)
b2	Liquid refrigerant OUT (heating mode; condenser)
c1	Liquid refrigerant IN (cooling mode; evaporator)
c2	Gas refrigerant OUT (cooling mode; evaporator)
d	Plate heat exchanger
e	Shut-off valve for service
f	Magnetic filter/dirt separator
g	Safety valve
h	Air purge
i	Drain valve
j	Flow sensor
k	Expansion vessel
l	Backup heater
m	Pump

B1PW	Space heating water pressure sensor
B2PR	Refrigerant pressure sensor
R1T	Thermistor (heat exchanger – water OUT)
R2T	Thermistor (backup heater – water OUT)
R3T	Thermistor (liquid refrigerant)
R4T	Thermistor (heat exchanger – water IN)
	Screw connection
	Flare connection
	Quick coupling
	Brazed connection

10.2 Wiring diagram: Indoor unit

See the internal wiring diagram supplied with the unit (on the inside of the indoor unit upper front panel). The abbreviations used are listed below.

Notes to go through before starting the unit

English	Translation
Notes to go through before starting the unit	Notes to go through before starting the unit
X1M	Main terminal
X2M	Field wiring terminal for AC
X5M	Field wiring terminal for DC
X6M	Backup heater power supply terminal
X7M, X8M	Booster heater power supply terminal
X10M	Smart Grid terminal
—·—·—·—	Earth wiring
– – – – – – –	Field supply
①	Several wiring possibilities
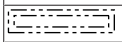	Option
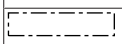	Not mounted in switch box
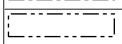	Wiring depending on model
	PCB
Note 1: Connection point of the power supply for the BUH/BSH should be foreseen outside the unit.	Note 1: Connection point of the power supply for the backup heater/booster heater should be foreseen outside the unit.
Backup heater power supply	Backup heater power supply
☐ 6T1 (3~, 230 V, 6 kW)	☐ 6T1 (3~, 230 V, 6 kW)
☐ 6V3 (1N~, 230 V, 6 kW)	☐ 6V3 (1N~, 230 V, 6 kW)
☐ 6WN/9WN (3N~, 400 V, 6/9 kW)	☐ 6WN/9WN (3N~, 400 V, 6/9 kW)
User installed options	User installed options
☐ Domestic hot water tank	☐ Domestic hot water tank
☐ Remote user interface	☐ Dedicated Human Comfort Interface (BRC1HHDA used as room thermostat)
☐ Ext. indoor thermistor	☐ External indoor thermistor
☐ Ext outdoor thermistor	☐ External outdoor thermistor
☐ Digital I/O PCB	☐ Digital I/O PCB
☐ Demand PCB	☐ Demand PCB
☐ Safety thermostat	☐ Safety thermostat
☐ Smart Grid	☐ Smart Grid
☐ WLAN module	☐ WLAN module
☐ WLAN cartridge	☐ WLAN cartridge
Main LWT	Main leaving water temperature
☐ On/OFF thermostat (wired)	☐ ON/OFF thermostat (wired)
☐ On/OFF thermostat (wireless)	☐ ON/OFF thermostat (wireless)
☐ Ext. thermistor	☐ External thermistor
☐ Heat pump convector	☐ Heat pump convector
Add LWT	Additional leaving water temperature
☐ On/OFF thermostat (wired)	☐ ON/OFF thermostat (wired)
☐ On/OFF thermostat (wireless)	☐ ON/OFF thermostat (wireless)
☐ Ext. thermistor	☐ External thermistor
☐ Heat pump convector	☐ Heat pump convector

Position in switch box

English	Translation
Position in switch box	Position in switch box

Legend

A1P		Main PCB
A2P	*	ON/OFF thermostat (PC=power circuit)
A3P	*	Heat pump convector
A4P	*	Digital I/O PCB
A8P	*	Demand PCB
A11P		Main PCB of the MMI (= user interface of the indoor unit)
A14P	*	PCB of the dedicated Human Comfort Interface (BRC1HHDA used as room thermostat)
A15P	*	Receiver PCB (wireless ON/OFF thermostat)
A20P	*	WLAN module
CN* (A4P)	*	Connector
DS1 (A8P)	*	DIP switch
F1B	#	Overcurrent fuse backup heater
F2B	#	Overcurrent fuse booster heater
F1U, F2U (A4P)	*	Fuse 5 A 250 V for digital I/O PCB
K1A, K2A	*	High voltage Smart Grid relay
K1M, K2M		Contactor backup heater
K3M	*	Contactor booster heater
K5M		Safety contactor backup heater
K6M		Relay 3-way valve bypass
K7M		Relay 3-way valve flow
K*R (A4P)		Relay on PCB
M2P	#	Domestic hot water pump
M2S	#	2-way valve for cooling mode
M3S	*	3-way valve for space heating/domestic hot water
PC (A15P)	*	Power circuit
PHC1 (A4P)	*	Optocoupler input circuit
Q1L		Thermal protector backup heater
Q4L	#	Safety thermostat
Q*DI	#	Earth leakage circuit breaker
R1H (A2P)	*	Humidity sensor
R1T (A2P)	*	Ambient sensor ON/OFF thermostat
R2T (A2P)	*	External sensor (floor or ambient)
R5T	*	Domestic hot water thermistor
R6T	*	External indoor or outdoor ambient thermistor
S1S	#	Preferential kWh rate power supply contact
S2S	#	Electrical meter pulse input 1
S3S	#	Electrical meter pulse input 2
S4S	#	Smart Grid feed-in
S6S~S9S	*	Digital power limitation inputs
S10S-S11S	#	Low voltage Smart Grid contact
SS1 (A4P)	*	Selector switch
TR1		Power supply transformer
X6M	#	Backup heater power supply terminal strip
X6M	*	Booster heater power supply connector
X7M, X8M	*	Booster heater power supply terminal strip
X10M	*	Smart Grid power supply terminal strip
X*, X*A, X*Y, Y*		Connector
X*M		Terminal strip

* Optional
\# Field supply

Translation of text on wiring diagram

English	Translation
(1) Main power connection	(1) Main power connection
For HP tariff	For preferential kWh rate power supply
Indoor unit supplied from outdoor	Indoor unit supplied from outdoor
Normal kWh rate power supply	Normal kWh rate power supply
Only for normal power supply (standard)	Only for normal power supply (standard)
Only for preferential kWh rate power supply (outdoor)	Only for preferential kWh rate power supply (outdoor)
Outdoor unit	Outdoor unit
Preferential kWh rate power supply contact: 16 V DC detection (voltage supplied by PCB)	Preferential kWh rate power supply contact: 16 V DC detection (voltage supplied by PCB)
SWB	Switch box
Use normal kWh rate power supply for indoor unit	Use normal kWh rate power supply for indoor unit
(2) Backup heater power supply	(2) Backup heater power supply
Only for ***	Only for ***
(3) User interface	(3) User interface
Only for remote user interface	Only for the dedicated Human Comfort Interface (BRC1HHDA used as room thermostat)
SD card	Card slot for WLAN cartridge
SWB	Switch box
WLAN cartridge	WLAN cartridge
(4) Domestic hot water tank	(4) Domestic hot water tank
3 wire type SPST	3 wire type SPST
Booster heater power supply	Booster heater power supply
Only for ***	Only for ***
SWB	Switch box
(5) Ext. thermistor	(5) External thermistor
SWB	Switch box
(6) Field supplied options	(6) Field supplied options
12 V DC pulse detection (voltage supplied by PCB)	12 V DC pulse detection (voltage supplied by PCB)
230 V AC Control Device	230 V AC Control Device
230 V AC supplied by PCB	230 V AC supplied by PCB
Continuous	Continuous current
DHW pump output	Domestic hot water pump output
DHW pump	Domestic hot water pump
Electrical meters	Electrical meters
For HV Smart Grid	For high voltage Smart Grid
For LV Smart Grid	For low voltage Smart Grid
For safety thermostat	For safety thermostat
For Smart Grid	For Smart Grid
Inrush	Inrush current
Max. load	Maximum load
Normally closed	Normally closed
Normally open	Normally open
Safety thermostat contact: 16 V DC detection (voltage supplied by PCB)	Safety thermostat contact: 16 V DC detection (voltage supplied by PCB)
Shut-off valve	Shut-off valve
Smart Grid contacts	Smart Grid contacts
Smart Grid PV power pulse meter	Smart Grid photovoltaic power pulse meter
SWB	Switch box
(7) Option PCBs	(7) Option PCBs
Alarm output	Alarm output
Changeover to ext. heat source	Changeover to external heat source
Max. load	Maximum load
Min. load	Minimum load
Only for demand PCB option	Only for demand PCB option
Only for digital I/O PCB option	Only for digital I/O PCB option
Options: ext. heat source output, solar pump connection, alarm output	Options: external heat source output, solar pump connection, alarm output
Options: On/OFF output	Options: ON/OFF output
Power limitation digital inputs: 12 V DC / 12 mA detection (voltage supplied by PCB)	Power limitation digital inputs: 12 V DC / 12 mA detection (voltage supplied by PCB)
Refer to operation manual	Refer to operation manual
Solar input	Solar input
Solar pump connection	Solar pump connection
Space C/H On/OFF output	Space cooling/heating ON/OFF output
SWB	Switch box
(8) External On/OFF thermostats and heat pump convector	(8) External ON/OFF thermostats and heat pump convector
Additional LWT zone	Additional leaving water temperature zone
Main LWT zone	Main leaving water temperature zone
Only for external sensor (floor/ambient)	Only for external sensor (floor or ambient)
Only for heat pump convector	Only for heat pump convector
Only for wired On/OFF thermostat	Only for wired ON/OFF thermostat
Only for wireless On/OFF thermostat	Only for wireless ON/OFF thermostat

Electrical connection diagram

For more details, please check the unit wiring.

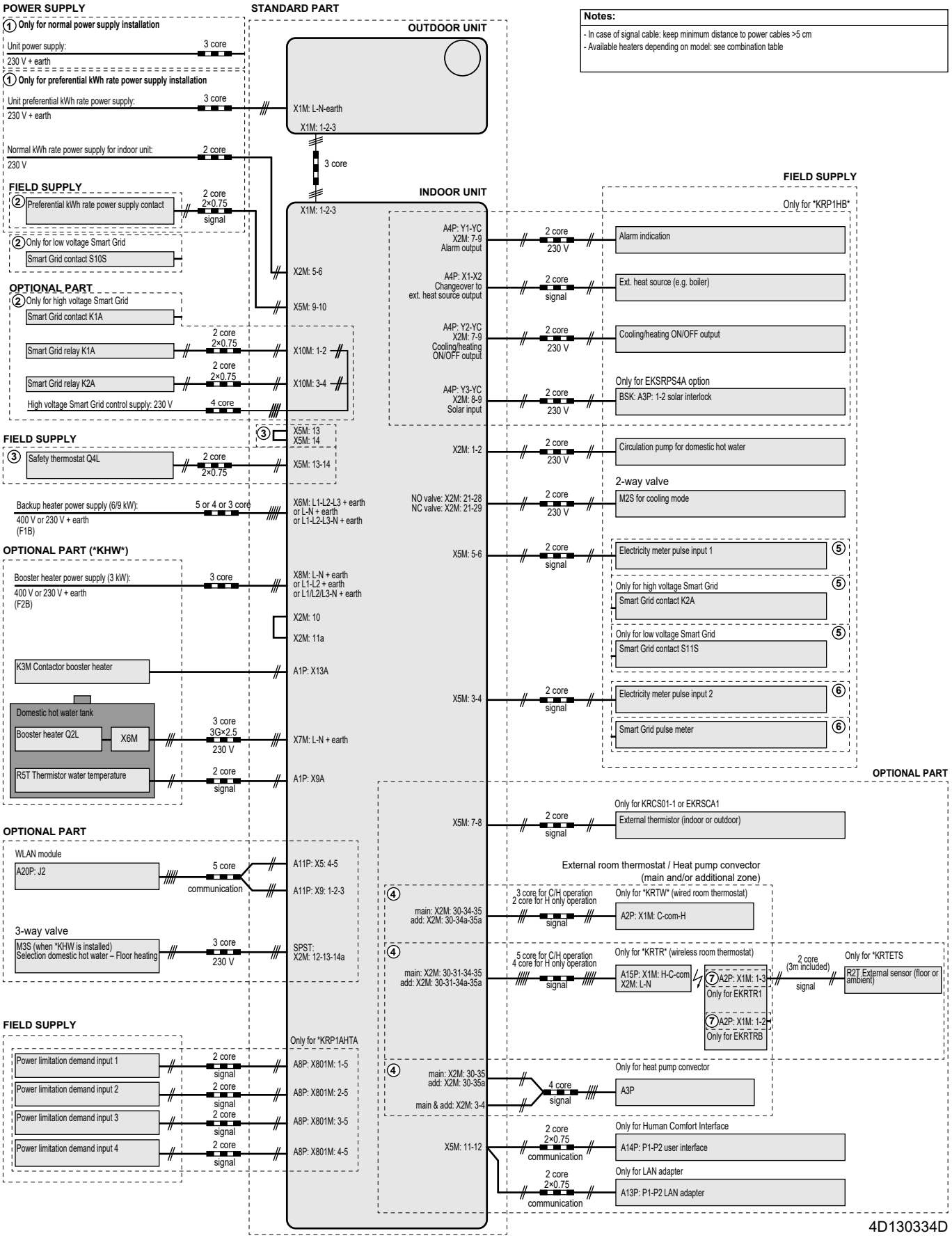

10.3 Table 1 – Maximum refrigerant charge allowed in a room: indoor unit

A_{room} (m^2)	Maximum refrigerant charge in a room (m_{max}) (kg)							
	H=1150 mm	H=1200 mm	H=1300 mm	H=1400 mm	H=1500 mm	H=1600 mm	H=1700 mm	H=1800 mm
1	0.25	0.26	0.29	0.31	0.33	0.36	0.38	0.40
2	0.51	0.53	0.58	0.62	0.67	0.71	0.76	0.81
3	0.76	0.79	0.86	0.93	1.00	1.07	1.14	1.21
4	1.01	1.06	1.15	1.24	1.34	1.43	1.52	1.61
5	1.27	1.32	1.44	1.55	1.67	1.78	1.90	2.01
6	1.52	1.59	1.73	1.87	2.00	2.14	2.28	2.42
7	1.66	1.74	1.89	2.04	2.19	2.34	2.49	2.65
8	1.78	1.86	2.02	2.18	2.34	2.50	2.67	2.83
9	1.89	1.97	2.14	2.31	2.49	2.66	2.83	3.00
10	1.99	2.08	2.26	2.44	2.62	2.80	2.98	3.16

INFORMATION

- H = Height measured from the bottom of the casing to the floor.
- For intermediate H values (i.e. when H is between two H values from the table), consider the value that corresponds to the lower H value from the table. If H=1450 mm, consider the value that corresponds to "H=1400 mm".
- For intermediate A_{room} values (i.e. when A_{room} is between two A_{room} values from the table), consider the value that corresponds to the lower A_{room} value from the table. If A_{room}=8.5 m^2, consider the value that corresponds to "A_{room}=8 m^2".

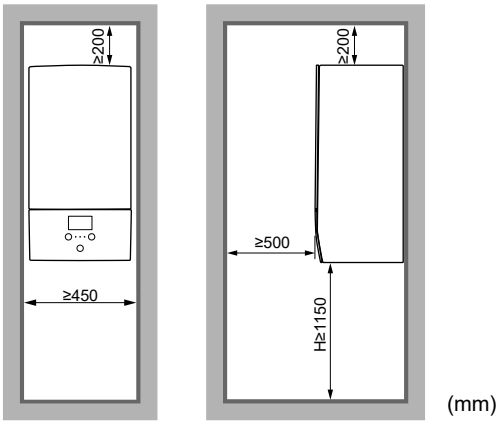

(mm)

10.4 Table 2 – Minimum floor area: indoor unit

m_c (kg)	Minimum floor area (m^2)							
	H=1150 mm	H=1200 mm	H=1300 mm	H=1400 mm	H=1500 mm	H=1600 mm	H=1700 mm	H=1800 mm
1.84	8.57	7.84	6.64	5.92	5.51	5.16	4.84	4.57
1.86	8.76	8.02	6.78	5.98	5.57	5.21	4.90	4.62
1.88	8.95	8.19	6.93	6.05	5.63	5.27	4.95	4.67
1.90	9.14	8.36	7.08	6.11	5.69	5.32	5.00	4.72

INFORMATION

- H = Height measured from the bottom of the casing to the floor.
- For intermediate H values (i.e. when H is between two H values from the table), consider the value that corresponds to the lower H value from the table. If H=1450 mm, consider the value that corresponds to "H=1400 mm".
- Systems with a total refrigerant charge (m_c) <1.84 kg (i.e. if the piping length is <27 m) are NOT subjected to any requirements to the installation room.
- Charges >1.9 kg are NOT allowed in the unit.

10.5 Table 3 – Minimum bottom opening area for natural ventilation: indoor unit

m_c	m_{max}	dm=m_c–m_{max} (kg)	Minimum bottom opening area (cm^2)							
			H=1150 mm	H=1200 mm	H=1300 mm	H=1400 mm	H=1500 mm	H=1600 mm	H=1700 mm	H=1800 mm
1.9	0.1	1.80	538	515	495	477	461	446	433	421
1.9	0.3	1.60	479	458	440	424	410	397	385	374
1.9	0.5	1.40	419	401	385	371	359	347	337	327
1.9	0.7	1.20	359	344	330	318	308	298	289	281
1.9	0.9	1.00	299	287	275	265	256	248	241	234
1.9	1.1	0.80	240	229	220	212	205	199	193	187
1.9	1.3	0.60	180	172	165	159	154	149	145	141
1.9	1.5	0.40	120	115	110	106	103	100	97	94
1.9	1.7	0.20	63	58	55	53	52	50	49	47

INFORMATION

- H = Height measured from the bottom of the casing to the floor.
- For intermediate H values (i.e. when H is between two H values from the table), consider the value that corresponds to the lower H value from the table. If H=1450 mm, consider the floor area that corresponds to "H=1400 mm".
- For intermediate dm values (i.e. when dm is between two dm values from the table), consider the value that corresponds to the higher dm value from the table. If dm=1.55 kg, consider the value that corresponds to "dm=1.6 kg".

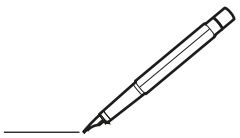

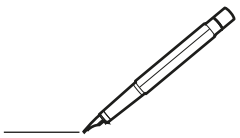

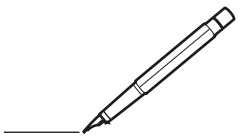

4P642727-1 C 00000000

Copyright 2020 Daikin

DAIKIN EUROPE N.V.
Zandvoordestraat 300, B-8400 Oostende, Belgium

4P642727-1C 2026.09